Iván Nagy

# Introduction to Chemical Process Instrumentation

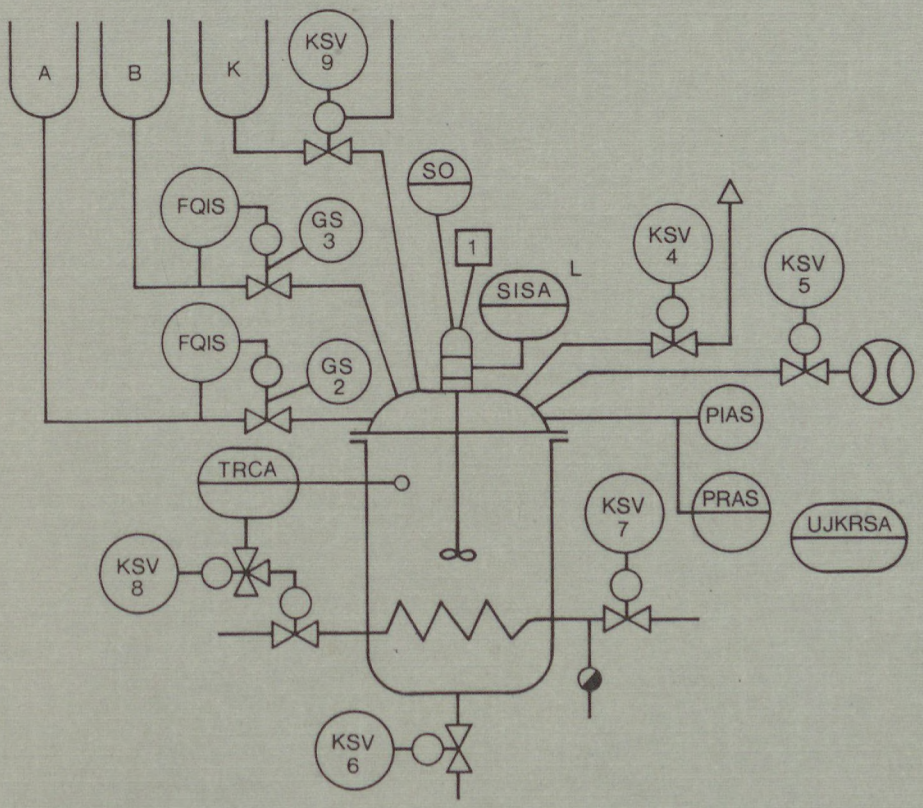


Akadémiai Kiadó, Budapest

# INTRODUCTION
# TO CHEMICAL PROCESS
# INSTRUMENTATION

192981

# INTRODUCTION TO CHEMICAL PROCESS INSTRUMENTATION

**I. NAGY**
Technical University of Budapest
Department of Chemical and Food Engineering
Budapest, Hungary

**AKADÉMIAI KIADÓ · BUDAPEST 1992**

MTA
KIK
0 00004 06551 7

688041

This book is a revised version of *Bevezetés a vegyipari műszerezésbe* published by Műszaki Könyvkiadó, Budapest

MAGYAR TUDOMÁNYOS AKADÉMIA KÖNYVTÁRA

ISBN 963 05 5988 9

© I. Nagy 1992

Joint edition published by
Akadémiai Kiadó, Budapest, Hungary and
as Vol. 3 in the series *Process Measurement and Control* by
Elsevier Science Publishers, Amsterdam, The Netherlands

All rights reserved. No part of this book may be reproduced by any means, or transmitted, or translated into machine language without the written permission of the publisher.

Printed in Hungary by Akadémiai Kiadó és Nyomda Vállalat,
Budapest

TUD. AKADÉMIA KÖNYVTÁRA
Könyvtári 3002 /19 92 sz.

*"Chemical process control is a subject of study with its own intricacies and challenges. It is intimately related to chemical engineering science and practice, and as such it is not a degenerate child of any other branch of engineering."*

(G. Stephanopoulos)

# PREFACE

The general development of technology has led to the increasing specialisation and consequent isolation of experts in a number of scientific areas. The instrumentation and control of processes in the chemical industry, however, requires close cooperation between chemists and engineers in the chemical, mechanical, control and instrumentation fields, as well as computer hardware and software experts. This book is intended to promote such teamwork by presenting a comprehensive description of chemical process control in a way that it may be understood by each team member. The plant design engineer and his expert partner in instrumentation are the primary focus of our consideration, and the text may serve as a handbook for them.

The instrumentation and control of processes do not develop in a uniform way: the appearance and acceptance of new techniques result in rapid changes, followed by a period of consolidation. The periods of rapid development usually begin with the conjunction of the availability of new hardware and matched by demands from the chemical industry. That was the case in the 1950s with the appearance of pneumatic transmitters having a standard signal range and miniature receivers. In the same period the capacity and size of chemical plants grew rapidly, and centralisation became essential.

In the late 1970s a new period of rapid development was instituted by the application of microprocessors. The industry demanded data processing, advanced control strategies, easy and rapid installation. Classical computer control was too expensive and unreliable but the advent of microelectronics and distributed intelligence allowed the instrument manufacturers to respond effectively.

In the second half of the 1980s microprocessors, personal computers and semiconductor-based intelligent sensors began to take a share in process instrumentation. Digital distributed control systems have become generally accepted and the conventional pneumatic analog controller, once the principal instrument of the chemical industry, has given way to electronics. On the other hand, pneumatic actuators and logic control elements have established their place in process control.

Digital instrumentation has enabled the development of information management and plant-wide integrated systems. Computer networks, CIM (Computer Integrated Manufacturing), and PMS (Plant Management System) are among the trends which are currently under development.

In the present transitional period, nearly all types of instruments and control systems exist in the chemical industry. Liquid-filled thermometers and fibre optic cables may both be found in the same plant. I have tried to establish a proper balance between the old and the new. Higher mathematics and purely theoretical

treatments of control problems are avoided because several excellent textbooks are available on these topics.

The size of this book does not permit all unit operations to be dealt with in detail, for which I must apologise.

I must first thank the publishing houses Elsevier Science Publishers, and Akadémiai Kiadó for making it possible to publish the present English edition. I am indebted to Mr. R. Szilágyi, Dr. R. Mohilla, Mr. F. Kovács, Dr. I. Pallai, and Dr. H. Hajdu who read my manuscript and helped to make it more consistent, clear and comprehensible. It is not their fault if this has not been achieved.

I am grateful to my former colleagues and students who contributed to the material contained in the book.

I. NAGY

# CONTENTS

List of abbreviations . . . . . XV

Introduction . . . . . XIX

PART I FUNDAMENTALS . . . . . 1

Chapter 1
INFORMATION AND MEASUREMENT . . . . . 3
1.1 The structure of the book . . . . . 3
1.2 Fundamentals of process monitoring . . . . . 3
1.2.1 Selection of measured variables . . . . . 4
1.2.2 Selection of controlled and manipulated variables . . . . . 6
1.3 Information gathering methods . . . . . 7
1.3.1 Sensing and measuring . . . . . 8
1.3.2 Frequency and recording of information . . . . . 10
1.3.3 Accuracy of measurement . . . . . 13
1.3.4 Warning and protecting systems . . . . . 16
1.3.5 Measurement error theory . . . . . 18
1.4 Instrument technology . . . . . 22
1.4.1 General specification . . . . . 23
1.4.2 Reliability . . . . . 23
1.4.3 Instrument selection . . . . . 26
1.4.4 The environment . . . . . 28
1.4.5 Human engineering . . . . . 30
1.4.6 Economic considerations . . . . . 31
References . . . . . 32

Chapter 2
FUNDAMENTALS OF PROCESS CONTROL . . . . . 34
2.1 Control objectives . . . . . 34
2.2 Description of chemical systems . . . . . 34
2.2.1 Fundamental equations . . . . . 35
2.2.2 Mathematical models and simulation . . . . . 37
2.2.3 Input–output models for control . . . . . 39
2.2.4 Process identification . . . . . 40
2.3 Degrees of freedom for control . . . . . 41
2.3.1 General principles . . . . . 42
2.3.2 Elementary calculation methods . . . . . 42
2.3.3 Calculation of the degrees of freedom . . . . . 44
2.4 Fundamentals of control theory . . . . . 45
2.4.1 Controllability and observability . . . . . 45
2.4.2 Quality of control, stability . . . . . 46
2.4.3 Multiloop control system analysis . . . . . 48
2.5 Unit control schemes . . . . . 51

2.5.1 Set point control . . . . . 51
2.5.2 Introducing auxiliary input variables . . . . . 52
2.5.3 Ratio control systems . . . . . 53
2.5.4 Cascade control systems . . . . . 55
2.5.5 Selective controls . . . . . 56
2.5.6 Split range control . . . . . 58
2.5.7 Trend control . . . . . 59
2.5.8 Extremity controls . . . . . 60
2.5.9 Sequencing controls . . . . . 60
2.6 Advanced control methods . . . . . 61
2.6.1 Predictive control . . . . . 61
2.6.2 Inferential and internal model control . . . . . 61
2.6.3 Adaptive control . . . . . 62
2.6.4 Other advanced control methods . . . . . 64
References . . . . . 65

Chapter 3
PRINCIPLES OF PROCESS INSTRUMENTATION DESIGN . . 66
3.1 Design methodologies . . . . . 66
3.1.1 Specifying the degree of automation . . . . . 67
3.1.2 Project documents . . . . . 68
3.2 Graphical documentation . . . . . 71
3.2.1 Flowsheets . . . . . 71
3.2.2 Logic diagrams . . . . . 74
3.2.3 Instrumentation diagrams . . . . . 75
3.3 Control system design . . . . . 79
3.3.1 Control system design strategy . . . . . 79
3.3.2 Process fault detection . . . . . 81
3.3.3 Design aids . . . . . 83
3.3.4 Interrelation of equipment design and control . . . . . 84
3.3.5 Interrelation of piping and instrumentation . . . . . 87
3.4 Computer aided design . . . . . 87
3.4.1 Computer aided design of control systems . . . . . 88
3.4.2 Computer aided design of instrumentation . . . . . 91
3.4.3 Design of computer control . . . . . 92
References . . . . . 93

PART II AUTOMATIC CONTROL OF UNIT OPERATIONS AND PROCESSES . . . . . 95

Chapter 4
HYDRO–MECHANICAL UNIT OPERATIONS . . . . . 97
4.1 Instrumentation of storage . . . . . 97
4.1.1 Liquid level measurement and control . . . . . 98
4.1.2 Instrumentation of liquid storage . . . . . 103
4.1.3 Instrumentation of gas storage . . . . . 107
4.1.4 Instrumentation of silos and bunkers . . . . . 109
4.1.5 Warehouse automation . . . . . 110
4.2 Measurement and control of material streams . . . . . 112
4.2.1 Flow metering . . . . . 112
4.2.2 Flow control of liquids . . . . . 117
4.2.3 Gas and steam flow control . . . . . 122
4.2.4 Transport of solid materials . . . . . 127
4.3 Automation of blending and filling . . . . . 133
4.3.1 In-line blending . . . . . 133
4.3.2 Mixing plant automation . . . . . 134

4.3.3 Automatic weighing and filling . . . . . 136
4.4 Instrumentation of mechanical separation . . . . . 139
4.4.1 Sedimentation . . . . . 139
4.4.2 Control of filtering . . . . . 140
4.4.3 Control of centrifuges . . . . . 141
4.5 Control of crushing and grinding . . . . . 144
4.5.1 Instrumentation of crushers . . . . . 144
4.5.2 Ball mill control . . . . . 145
4.6 Control of mixing and moulding equipment . . . . . 146
4.6.1 Batch mixer and kneader controls . . . . . 147
4.6.2 Material forming and coating control . . . . . 148
4.6.3 Control of presses and extruders . . . . . 150
4.6.4 Automation of injection moulding . . . . . 153
References . . . . . 155

Chapter 5
INSTRUMENTATION OF THERMAL UNIT OPERATIONS . . 157
5.1 Principles of heat transfer and temperature control . . . . . 157
5.2 Control of heat exchangers . . . . . 158
5.2.1 Direct mixing heat exchange . . . . . 158
5.2.2 Control of surface heat exchangers . . . . . 162
5.2.3 Control of recuperators . . . . . 167
5.3 Control of furnaces and heaters . . . . . 167
5.3.1 Combustion control . . . . . 168
5.3.2 Gas firing control . . . . . 169
5.3.3 Fuel oil and mixed fuel firing control . . . . . 171
5.3.4 Other high temperature heater controls . . . . . 173
5.4 Control of refrigeration equipment . . . . . 174
5.4.1 Control of compression type refrigeration . . . . . 174
5.4.2 Absorption type refrigeration control . . . . . 176
5.5 Control of evaporators . . . . . 177
5.5.1 Process dynamics of evaporators . . . . . 177
5.5.2 Elementary control loops . . . . . 179
5.5.3 Single effect evaporator control . . . . . 183
5.5.4 Control of multiple effect evaporators . . . . . 185
5.5.5 Control of waste heat boilers . . . . . 187
References . . . . . 187

Chapter 6
INSTRUMENTATION OF MASS TRANSFER UNIT OPERATIONS . . . . . 188
6.1 Control of crystallisation . . . . . 188
6.1.1 Control of evaporating crystallisers . . . . . 189
6.1.2 Control of cooling crystallisers . . . . . 192
6.2 Instrumentation and control of dryers . . . . . 193
6.2.1 Humidity and moisture measurement . . . . . 194
6.2.2 Principles of the drying process . . . . . 196
6.2.3 Control of contact dryers . . . . . 197
6.2.4 Control of convective dryers . . . . . 201
6.2.5 Control of batch convective dryers . . . . . 204
6.2.6 Control of rotary dryers . . . . . 204
6.2.7 Control of fluidised bed dryers . . . . . 205
6.2.8 Control of spray dryers . . . . . 206
6.2.9 Control of other dryer types . . . . . 209
6.3 Control of adsorbers and ion-exchange equipment . . . . . 209
6.3.1 Control of batch adsorbers and ion-exchangers . . . . . 210
6.4 Control of absorbers . . . . . 214

6.4.1 Control of gas separating absorbers . . . . . 215
6.4.2 Control of absorbers with liquid product . . . . . 216
6.5 Control of extractors . . . . . 217
6.6 Control of distillation columns . . . . . 220
6.6.1 Distillation process dynamics . . . . . 220
6.6.2 Degrees of freedom for control of distillation . . . . . 222
6.6.3 Elementary control loops . . . . . 223
6.6.4 Control of continuous binary distillation . . . . . 228
6.6.5 Control of multicomponent distillation . . . . . 235
6.6.6 Control of batch distillation columns . . . . . 237
References . . . . . 240

Chapter 7
CONTROL OF CHEMICAL REACTORS . . . . . 241
7.1 Classification of reactors . . . . . 241
7.2 General control rules for reactors . . . . . 243
7.2.1 Reactor feed control . . . . . 243
7.2.2 Control of reactor operation . . . . . 244
7.2.3 Quality control of reactors . . . . . 246
7.3 Continuous stirred tank reactor . . . . . 247
7.3.1 Modelling the CSTR . . . . . 247
7.3.2 Control of the CSTR . . . . . 249
7.4 Batch process control . . . . . 251
7.4.1 Heating control loop behaviour . . . . . 251
7.4.2 Sequencing control of a batch reactor . . . . . 252
7.4.3 Computer control of batch processes . . . . . 255
7.5 Instrumentation of other reactor types . . . . . 256
7.5.1 Tubular reactor instrumentation . . . . . 258
7.5.2 Instrumentation of electrolytic cells . . . . . 260
References . . . . . 262

Chapter 8
CONTROL OF UNIT PROCESSES . . . . . 263
8.1 Control of oxidation processes . . . . . 263
8.2 Hydrogenation process control . . . . . 265
8.3 Control of polymerisation . . . . . 267
8.4 Control of rubber curing . . . . . 269
8.5 Control of biotechnological processes . . . . . 270
8.5.1 Instrumentation for fermentation process control . . . . . 271
8.5.2 Computer control of fermentation processes . . . . . 275
8.6 Control of coal gasification processes . . . . . 277
8.7 Neutralisation, waste treatment control . . . . . 280
8.7.1 Ion concentration measurement . . . . . 280
8.7.2 Electrodes . . . . . 281
8.7.3 Characteristics of the pH control loop . . . . . 283
8.7.4 pH control schemes . . . . . 284
References . . . . . 289

PART III PROCESS PLANT INSTRUMENTATION . . . . . 291

Chapter 9
PROCESS CONTROL HARDWARE ELEMENTS . . . . . 293
9.1 Sensors and transmitters . . . . . 293
9.1.1 Primary sensing elements . . . . . 294
9.1.2 Primary instruments . . . . . 295
9.1.3 On-line analysers . . . . . 296

9.1.4 Biosensors . . . . . 301
9.1.5 Transmitters, transducers and telemetry . . . . . 302
9.2 Receivers and controllers for analogue signals . . . . . 304
9.2.1 Receiving instruments . . . . . 304
9.2.2 Controllers and accessories . . . . . 306
9.2.3 Direct acting controllers . . . . . 307
9.3 Annunciators and logic control systems . . . . . 309
9.3.1 Annunciators . . . . . 309
9.3.2 Hardwired logic control systems . . . . . 310
9.3.3 Programmable controllers . . . . . 311
9.3.4 Pneumatic logic control systems . . . . . 312
9.3.5 Hydraulic control systems . . . . . 313
9.4 Final control elements . . . . . 313
9.4.1 Control valves . . . . . 314
9.4.2 Types of final control element . . . . . 324
9.4.3 Valve actuators . . . . . 327
9.4.4 Variable speed drives . . . . . 330
9.4.5 Valve positioners . . . . . 331
References . . . . . 332

Chapter 10
COMPUTER CONTROL . . . . . 334
10.1 Computer application — fundamentals . . . . . 334
10.1.1 Computers in the chemical process industry . . . . . 334
10.1.2 Coupling process and computer . . . . . 335
10.1.3 Characteristics of the controlled process . . . . . 338
10.1.4 Safety requirements . . . . . 340
10.2 Computer control systems . . . . . 340
10.2.1 Centralised computer control systems . . . . . 340
10.2.2 Distributed control systems . . . . . 342
10.2.3 Hierarchical control systems . . . . . 343
10.2.4 Supervisory and data acquisition systems . . . . . 347
10.3 Digital control hardware . . . . . 347
10.3.1 Digital control units . . . . . 347
10.3.2 Microcomputers . . . . . 350
10.3.3 Mini- and supermini computers . . . . . 350
10.4 Computer interfaces . . . . . 353
10.4.1 Process inputs . . . . . 353
10.4.2 Process outputs . . . . . 355
10.4.3 Man-machine interface . . . . . 357
10.5 Data communications . . . . . 359
10.5.1 Digital data transfer . . . . . 360
10.5.2 Communication protocols . . . . . 362
10.5.3 Process control bus . . . . . 363
10.5.4 Field bus . . . . . 364
10.6 Control software . . . . . 364
10.6.1 Control algorithms . . . . . 365
10.6.2 Operating systems and interrupts . . . . . 366
10.6.3 Process control languages . . . . . 367
10.6.4 Control programs . . . . . 368
10.6.5 Software development tools . . . . . 369
References . . . . . 369

Chapter 11
INSTRUMENTATION AND MANAGEMENT OF CHEMICAL PLANTS . . . . . 371
11.1 Information management . . . . . 371

11.1.1 Hierarchy levels . . . . . 372
11.1.2 Process management systems . . . . . 373
11.2 Operation centres . . . . . 374
11.2.1 Control panels and consoles . . . . . 374
11.2.2 Control room layout . . . . . 379
11.3 Plant layout and instrumentation . . . . . 384
11.3.1 General layout . . . . . 384
11.3.2 Field instrumentation . . . . . 384
11.3.3 Instrumentation of hazardous plants . . . . . 387
11.4 Piping and cabling . . . . . 390
11.4.1 Impulse and sampling lines . . . . . 390
11.4.2 Pneumatic and hydraulic pipelines . . . . . 391
11.4.3 Electrical cables . . . . . 392
11.4.4 Other communication lines . . . . . 392
11.5 Instruments in technological pipe networks . . . . . 393
11.6 Utilities for control systems . . . . . 394
11.6.1 Pneumatics . . . . . 394
11.6.2 Electrical power supply . . . . . 396
11.6.3 Hydraulic power sources . . . . . 397
11.6.4 Air conditioning . . . . . 397
References . . . . . 398

Chapter 12
ECONOMIC EFFECTS OF INSTRUMENTATION . . . . . 400
12.1 Capital expenditure . . . . . 400
12.1.1 Instrument prices . . . . . 401
12.1.2 Installation costs . . . . . 402
12.1.3 Design and programming expenditure . . . . . 403
12.1.4 Analysis of the costs . . . . . 404
12.1.5 Repair shop and auxiliaries . . . . . 404
12.2 Instrumentation cost of a plant . . . . . 406
12.3 Maintenance and operating costs . . . . . 407
12.4 Calculation of the economy of instrumentation . . . . . 408
12.4.1 Calculation methods . . . . . 409
12.4.2 Return time calculation . . . . . 410
12.4.3 Incremental calculation method . . . . . 410
12.4.4 Optimum degree of automation . . . . . 411
12.5 Training . . . . . 414
12.6 Optimisation . . . . . 415
References . . . . . 416

Appendix . . . . . 417

Subject index . . . . . 420

# LIST OF ABBREVIATIONS

| | |
|---|---|
| ADC | Analogue Digital Converter |
| AFC | Adjustable Frequency Control |
| AGA | American Gas Association |
| AI | Artificial Intelligence |
| ALU | Arithmetic Logic Unit |
| ANSI | American National Standards Institute |
| API | American Petroleum Institute |
| ASTM | American Society of Testing Materials |
| ASU TP | Avtomatisirovannaja Systema Upravleniya Technologicheskiy Processov |
| BMSR | Betriebs Mess- und Regeltechnik (obsolete) |
| BS | British Standard |
| CACSD | Computer Aided Control System Design |
| CAD | Computer Aided Design |
| CADC | Computer Aided Design Center (Cambridge, UK) |
| CAE | Computer Aided Engineering |
| CAM | Computer Aided Manufacturing |
| CAMAC | Computer Application for Measurement and Control |
| CAQ | Computer Aided Quality-Assurance |
| CIM | Computer Integrated Manufacturing |
| CETOP | Comité Européen des Transmissions Oléohydrauliques et Pneumatiques |
| CMEA | Council of Mutual Economic Aid (obsolete) |
| CNC | Computer Numerical Control |
| CPI | Chemical Process Indrustry |
| CPU | Central Processing Unit |
| CRT | Cathode Ray Tube |
| CSI | Current Source Inverter |
| CSMA/CD | Carrier Sense Mutiple Access/Collision Detection |
| CSMP | Continuous System Modelling Program |
| CSTR | Continuous Stirred Tank Reactor |
| DAC | Digital to Analogue Converter |
| DDC | Direct Digital Control |
| DCS | Distributed Control System |

| | |
|---|---|
| DCE | Data Communication Equipment |
| DIN | Deutsche Industrie Norm |
| DMC | Dynamic Matrix Control |
| DP | Data Processing |
| dp | differential pressure |
| DTE | Data Terminal Equipment |
| EAROM | Electrically Alterable Read Only Memory |
| EMF | Electro Motoric Force |
| EMI | Electromagnetic Interference |
| EPROM | Erasable Programmable Read Only Memory |
| ESD | Emergency Shut-Down |
| FDA | Food and Drug Administration |
| FTD | Fail to Danger |
| FTS | Fail to Safe |
| GLP | Good Laboratory Practice |
| GMP | Good Manufacturing Practice |
| HART | Highway Addressable Remote Transducer |
| HAZAN | Hazard Analysis |
| HAZOP | Hazard and Operability Analysis |
| HDLC | High Level Data Link Control |
| HFBR | Hollow Fibre Bioreactor |
| HIFT | Hardware Implemented Fault Tolerance |
| HTG | Hydrostatic Tank Gauge |
| IAE | Integrated Absolute Error |
| IC | Integrated Circuit |
| IEC | International Electrotechnical Committee |
| IFAC | International Federation of Automatic Control |
| IFIP | International Federation of Information Processing |
| IMC | Internal Model Control |
| ISA | Instrument Society of America |
| ISE | Integrated Square Error |
| ISO | International Standardisation Organisation |
| ITAE | Integral of Time Multiplied Absolute Error |
| LAN | Local Area Network |
| LC | Liquid Crystal |
| LED | Light Emitting Diode |
| LPG | Low Pressure Gasoline |
| LSI | Large Scale Integration |
| MAWP | Maximum Allowable Working Pressure |
| MFCU | Multifunction Control Unit |

| | |
|---|---|
| MIAS | Model Identification Adaptive System |
| MIMO | Multiple Input Multiple Output |
| MISO | Multiple Input Single Output |
| MMI | Man Machine Interface |
| MMSP | Multicomponent Multistage Separation Processes |
| MPH | Maximum Peak Height |
| MPHC | Model Predictive Heuristic Control |
| MRAS | Model Reference Adaptive Control |
| MRCO | Maximum Rate of Change in the Outflow |
| MSI | Medium Scale Integration |
| MTBF | Mean Time Between Failures |
| MTTR | Mean Time To Repair |
| NADH | Nicotinamide adenine dinucleotide |
| NAMUR | Normen Arbeitsgemeinschaft Mess- und Regelungstechnik |
| NPSH | Net Positive Suction Head |
| NEMA | National Electrical Manufacturers Association (USA) |
| NIR | Near Infrared Reflection |
| NMR | Nuclear Magnetic Resonance |
| NTC | Negative Temperature Coefficient |
| OEM | Original Equipment Manufacturer |
| OIML | Organisation Internationale de Métrologie Légale |
| OMC | Operation Management Center |
| OPC | Optimal Predictive Control |
| OSI | Open System Interconnection |
| P&ID | Piping and Instrumentation Diagram |
| PC | Personal Computer |
| pcb | printed circuit board |
| pd | positive displacement (e.g. pump, meter) |
| PEARL | Process and Experiment Automation Real Time Language |
| PID | Proportional Integral Differential (control) |
| PLC | Programmable Logic Controller |
| PLT | Prozessleittechnik |
| PMS | Process or Plant Management System |
| POC | Process Operator Console |
| ppb | parts per billion |
| ppm | parts per million |
| PROM | Programmable Read Only Memory |
| PTB | Physikalische Technische Bundesanstalt |
| PWM | Pulse Width Modulation |
| QA | Quality Assurance |

| | |
|---|---|
| RAM | Random Access Memory |
| RDA | Relative Dynamic Array |
| RDG | Relative Disturbance Gain |
| RFI | Radio Frequency Interference (obsolete) |
| RGA | Relative Gain Array |
| RH | Relative Humidity |
| RIT | Return Investment Time |
| ROM | Read Only Memory |
| RT | Real Time |
| RTD | Resistance Thermometer |
| RTU | Remote Terminal Unit |
| RVP | Reid Vapour Pressure |
| SCADA | Supervisory Control and Data Acquisition |
| SCC | Supervisory Computer Control |
| SDC | Supervisory Digital Control |
| SPC | Setpoint Control (obsolete) or Statistical Process Control |
| SIFT | Software Implemented Fault Tolerance |
| SISO | Single Input Single Output |
| TAS | Tetraarylsilicate |
| TTL | Transistor Transistor Logic |
| TBP | True Boiling Point |
| TOC | Total Oxygen Demand |
| UNIDO | United Nations Industrial Development Organisation |
| UPS | Uninterruptible Power Source (or Uninterrupted Power Supply) |
| URS | Unifitsirovannaya Reguleeruyushchaya Systema |
| VDE | Verband Deutscher Elektrotechniker |
| VDI | Verein Deutscher Ingenieure |
| VDU | Visual Display Unit |
| VLSI | Very Large Scale Integration |
| VVI | Variable Voltage Input |
| WBPS | Weighted Blocks Per Second |

*Remark:* Vendors' names (e.g. IBM) and computer program names are not included.

# INTRODUCTION

In large chemical and petrochemical plants where most of the equipment is in the open air, monitoring of the processes depends on instrumentation. The operators are seated in control rooms before control desks or panels, with colour graphics displays in modern plants. The final control elements are operated by automatic controllers, and if human intervention is necessary it can be performed from the control room by telecommunication.

This scenario demonstrates that the designers of the equipment and plant, the operators, and the maintenance supervisors cannot do their job without a thorough knowledge of process instrumentation and control. Those engineers who are involved in the field of the process control of chemical plants have to know the principles of unit operations and processes and systems engineering.

The expression 'instrumentation' in this book does not simply mean the use of instruments, rather it encompasses everything from process monitoring to computer control, and the modes, means and theories applied to the control of a chemical process plant. In the German literature the term 'BMSR-technik', which means Plant Measurement Control and Regulation Techniques, and more recently the expression PLT 'Prozessleittechnik' has been used. Soviet Russian literature uses the term ASU TP, meaning Automatic Control Systems for Technological Processes.

A fundamental underpinning of good and efficient instrumentation is a knowledge of the principles of metrology, process technology and systems engineering. Close cooperation and real teamwork are necessary between the designer, the chemist and the mechanical, control and chemical engineers. The scientific design of instrumentation needs a description of the process dynamics. When using computer control, the mathematical model of the system is of great importance. The chemical and mechanical engineers need to understand the functioning of instruments, controllers and computers only to the extent that is necessary for their application, since they do not need to design or construct them. This is why this book does not treat instruments and other hardware in detail.

The application of instruments and controllers is a scientific discipline in itself, using the principles of metrology applied through process dynamics to unit operations and chemical plant design. The rapid development of microprocessors and digital control has made their inclusion indispensable.

There are several books dealing with process control and industrial instrumentation, but to the author's knowledge none has a structure similar to this one. It attempts to give a brief, comprehensive review of those topics which are dealt with abundantly in other text books and literature, and therefore omits any treatise on

matrix calculus, Laplace transforms, control theory, mathematical modelling or computer programming. A short survey of instruments, computers and regulators is given without a detailed presentation of circuits and structure. Although these are necessary for process control, their description would have exceeded the bounds of this volume. Most of the other books on chemical process control deal general control theory, taking examples from the chemical industry. The material thus included, which constitutes half of such texts, can be found in mathematical and theoretical books. The present author sought to avoid this, and to present instead the application of instrumentation to unit operations, processes and plants. There are a few handbooks on this subject, among the best known being the *Handbook of Industrial Instrumentation* by Considine and Ross, and Béla Lipták's *Instrument Engineers' Handbook;* the bibliography contains the most important titles [1.1, 1.4, 1.5, 1.8, 1.9, 1.11].

The author's experience as a lecturer in this subject at the Technical University of Budapest was of great help.

Remark: The nomenclature of the notation used in the equations is presented after the equations. A common and uniform nomenclature did not seem to be practical because of the diversity of the scientific disciplines applied in the book. As each discipline has its own specific usage many overlaps would be unavoidable.

# PART I

# FUNDAMENTALS

*Fundamental aspects of the general principles of measurement and automatic control from the viewpoint of the chemical engineer are presented in the first three chapters. A brief survey of measurement and control theory is necessary in order to introduce their application. The unit control schemes are presented to facilitate the construction of unit operation control schemes. Although these unit control schemes are theoretically no different from those dealt with in the classical control theory, their formulation and presentation is tailored to the needs of the process industries.*

*The methods presented for the design of control system structures are, in this form, new, although similar algorithms have been elaborated by several authors. As computerisation is used throughout the process industries, the computer aided design (CAD) of control systems (CACSD) had to be mentioned.*

CHAPTER 1

# INFORMATION AND MEASUREMENT

## 1.1 THE STRUCTURE OF THE BOOK

In order to grasp the structure of this book we have to examine the sciences involved. The first scientific discipline necessary for an understanding of chemical process control is the theory of control. Familiarity with unit operations and unit processes is required to apply control schemes. A thorough knowledge of instruments, control systems, computers and computer peripherals is indispensable in the selection of the appropriate hardware and software. Metrology provides sound principles of measurement and calibration, and verification practices.

The design of process control systems presumes a familiarity with technology and equipment. As it is impossible to deal with all technologies and kinds of equipment, only general rules and examples are given here. One of the most important goals of instrumentation and automation is to improve the efficiency of the plant, to increase profit. Cost estimation is thus also an essential component of instrumentation.

In production planning for large chemical complexes a management information system forms part of the computer control system. Systems theory coupled with computer science can treat the problems of large complexes.

Chemical plant design is the final discipline we need to mention, which also includes process instrumentation. Figure 1.1 illustrates the relationships mentioned above.

## 1.2 FUNDAMENTALS OF PROCESS MONITORING

A thorough knowledge of the process, and the close cooperation of all concerned, are essential during the design phase. The modern instrumentation and control system is an integral part of the chemical process plant. In this respect Sir Harold Hartley's words should be born in mind:

"The control engineer must be accepted as a member of the modern project team alongside his colleagues representing the other engineering skills involved. This is necessary to ensure that control is taken into consideration as a basic element at the design stage and not as something that can be added later. It must make its contribution to the compromise that design ultimately represents."

The United Nations European Economic Commission recommended the consideration of the following factors:

— technical requirements,
— personnel safety,

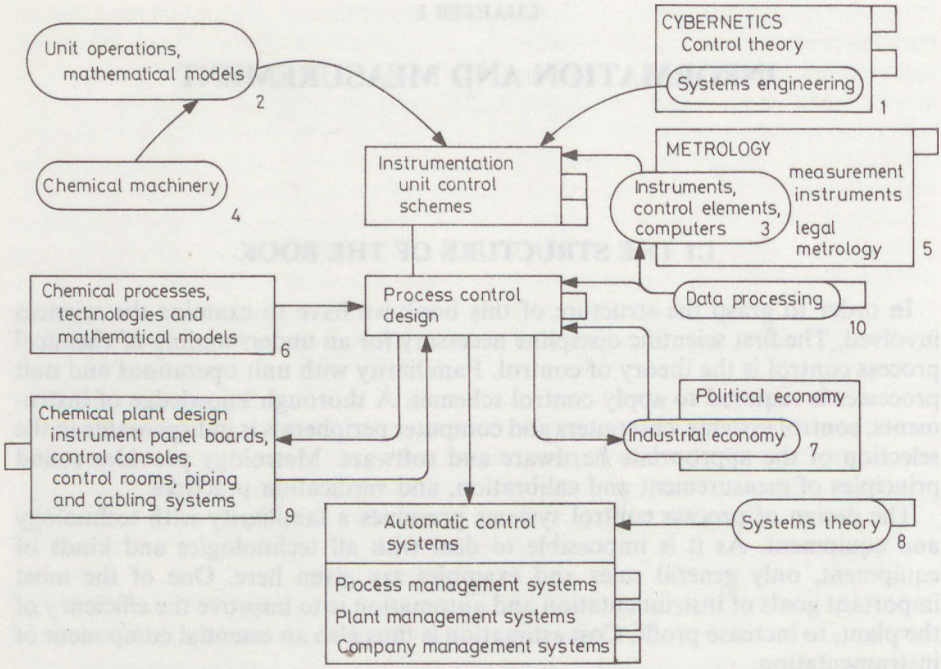


Fig. 1.1 The structure of the book

— product quality,
— reliability of product or utility,
— economically improved use of equipment, material, energy, labour and capital.

### 1.2.1 SELECTION OF MEASURED VARIABLES

The supervision and monitoring of a chemical process requires information from the technology; the correct selection of the measured (or controlled) parameters is therefore of great importance. The principal rules of selecting the measured and controlled variables and their location are presented in the following.

*Indication of hazardous conditions*

One of the most important goals of instrumentation is the protection of personnel and equipment. The group of devices that performs this function is frequently called safety instrumentation.

The instruments can be classified in two groups. The first group comprises those analysers which control the atmosphere and the effluents of a plant. Explosive or toxic gas detectors, pH meters, etc., are typical instruments.

The second group comprises the instruments connected with the equipment, such as pressure alarms, relief valves, high temperature alarms, flame detectors, safety vents, excess flow check valves, etc.

Many of these instruments are prescribed by national safety codes and regulations. They are installed for prevention of the development of hazardous conditions, detection of the degree of existing hazard, suppression of existing hazardous conditions, and enabling the operator to prevent damage.

*Supervision of technology; quality assurance*

An appropriate instrument must be installed at all points where the measurement of a variable may have a serious effect on the process or on product quality. It is not an easy task to select the proper instruments for this purpose. Experience, case histories, and computer simulation are of great help. If a similar plant already exists, data acquisition and evaluation by a mobile data logger and a computer is useful. Measurements required for quality assurance (QA) and Computer Aided Quality assurance (CAQ) have to be provided as well.

*Data acquisition for material balance*

All input and output streams have to be measured. This requirement means not only flow or weight measurements with the necessary corrections (for temperature, pressure, density, humidity) but also the analysis of the streams. Checking the weight of packaged products is in this respect a kind of analysis.

*Data acquisition for energy balance*

The consumption or generation of energy by a unit or a plant has to be measured, in order to calculate specific energy consumption rates and energy balances. According to the value of the energy stream, the accuracy and method of measurement should be individually determined.

*Measuring cost accounting factors*

It is recommended that accurate estimates be given, as opposed to rough and arbitrary allocations. Variables affecting more than 2% of the production or 1% of plant efficiency should be included in these measurements. Profitability as a process control variable lies within the area of computer control applications. Programs are available (e.g. Co-Audination System) to evaluate plant performance [1.2]. In this respect the plant management systems (PMS) need several data items which affect plant economy.

*Requirements of standards, environmental laws and safety codes*

It is wise to satisfy the requirements of the relevant standards, safety codes and regulations in respect of measurements and control devices. Normally if we considered all the points previously mentioned, no additional instrumentation would strictly be necessary. Despite this, it is better to avoid legal consequences, fines or other punishment, or high insurance fees, and not to omit such instruments and safety devices.

*Providing measurements for diagnosis and tests*

Predictive maintenance is the result of a careful monitoring of machinery and equipment conditions, followed by a diagnosis of the information, based on knowledge and experience. The availability of computerised maintenance management systems allows the maintenance work to be planned. Diagnostic technology enables the rapid detection of failures and identification of the failed component.

Real time, on-line diagnosis can prevent the occurrence of a failure. With the aid of appropriate measurements and monitoring, the computer system can predict a probable time of failure. The continuous analysis of measured values e.g. vibration, temperature, displacement, or any significant deviation from an acceptable range is noted, tracked and signalled, and an early warning system can be established. Where fixed instruments are not warranted, portable instrumentation is used, requiring personnel to traverse an established route, collect the data and return to the office in order to evaluate the data collected. Special diagnostic instrumentation is used on large rotating machinery (compressors, pumps, fans, etc.) [1.6].

In many cases special acceptance tests are required by the contractors, which need additional measuring points. These measurements should be precisely defined during the design phase in order to allow the provision of connections for the sensors. The instruments for the tests can be hired or provided by the constructing company for the test period, which is usually short. The provision of additional connections on a part-completed pressure proofed or painted, or insulated pipe is time-consuming and costly.

### 1.2.2 SELECTION OF CONTROLLED AND MANIPULATED VARIABLES

Control loop design is a task we consider later in the context of control system design (Chapter 3), but a preliminary selection of the controlled and manipulated variables is necessary at an early stage of design. There are five criteria for the application of successful automatic control and these have to be checked.

(*i*) There is a *controlled variable* which has to be maintained at a predetermined level (value) or changed according to a time schedule.
(*ii*) There are *disturbances* which affect the value of the controlled variable to an extent which is not tolerable.
(*iii*) It is possible to *measure* the controlled variable with a suitable process instrument or calculate its value from several measurements.

(*iv*) It is possible to modify the value of the controlled variable by the use of a *final control element*.
(*v*) It is not possible or not economic to use manual control.

The final criterion is related to human factors. If one of these criteria is not fulfilled it is not possible, or not economic, to install an automatic control loop. The first and second criteria need no explanation, but the third is interesting in regard to the choice of the correct measured variable or variables. It is thus common practice to measure physical property (e.g. density, electric conductivity, boiling points) instead of direct analysis of a fluid (indirectly controlled variable). The method which gives the largest deviation or smallest time delay can be evaluated. As an example, the boiling point change due to a change in concentration can be greater than the density change i.e.

$$\frac{\partial T_b}{\partial \bar{x}} \gtrless \frac{\partial \varrho}{\partial \bar{x}}. \tag{1–1}$$

For example, let us examine the change of pressure and density of water, water and steam, and superheated steam, and then the change of heat content and pressure. It is well known that the density of water is not affected by pressure, but that steam density is pressure-dependent. A change of temperature (heat content) changes steam pressure and considerably affects the pressure of a water–steam system, but has little effect on water density. Consequently, the pressure of a vessel can be effectively controlled by manipulating inflow or outflow of gas or steam but this is not the case for liquid flow manipulation. If vapour and liquid are in equilibrium, the pressure of the system can be regulated by the heat input or output. The fourth control criterion means that we have to select carefully the position of the final control element.

With the aid of cause and effect analysis the proper place and manipulated variable can be chosen. The optimal manipulating method can be selected by detailed calculations (e.g. flow rate by throttling or pump speed control). If there is no possibility to find an adequate manipulated variable the control loop cannot be realised. It is recommended to use the following general guidelines:

— Manipulate the stream which is least sensitive to ambient conditions,
— Manipulate the smaller stream if two streams have similar effect on the controlled variable,
— Manipulate the stream least likely to cause interaction problems.

## 1.3 INFORMATION GATHERING METHODS

Information is necessary for process analysis and control. In order to gather information one needs both hardware and software. Information is based on measurements and the measured signals (data) have to be processed and trasmitted. This procedure is called data acquisition and the instrumentation system used

for this purpose is usually called SCADA (Supervisory Control and Data Acquisition) system. In most of the process plants data acquisition forms an integral part of the control system [1.3].

### 1.3.1 SENSING AND MEASURING

The activity of defining the measured value of a physical quantity relative to the measuring unit is called measurement. Since measurement requires comparison a measure is needed, and with the aid of our senses we compare this to the measured parameter. Instruments are used to increase the accuracy of this comparison. The scale graduation and index pointer, or the digital display, makes the job of measuring easy. In Fig. 1.2 we see that, in the measuring procedure, there are disturbing effects and devices, each associated with inherent errors. For an exact evaluation of the measurement one needs a knowledge of the properties and errors of the system.

The first step is the conversion of the physical parameter to a measurement signal. The signals may be classified in several ways:

according to the energy, there are
—electrical,
—pneumatic,
—hydraulic,
—mechanical signals;

according to the form of the signal, there are
—analogue,
—digital (or coded) signals;

according to the value of the signal, there are
—deterministic (periodic or not periodic),
—stochastic (stable or not stable) signals;

according to time, there are
—continuous or permanent,
—discontinuous or temporary signals;

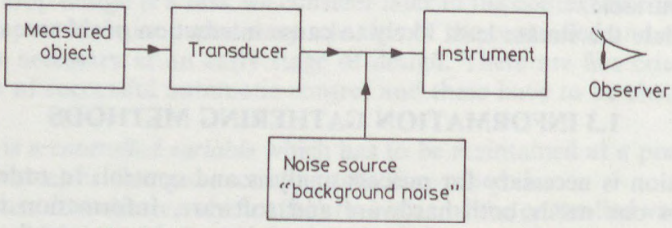


Fig. 1.2 The measurement process (after Shannon)

Table 1.1. Signal classes

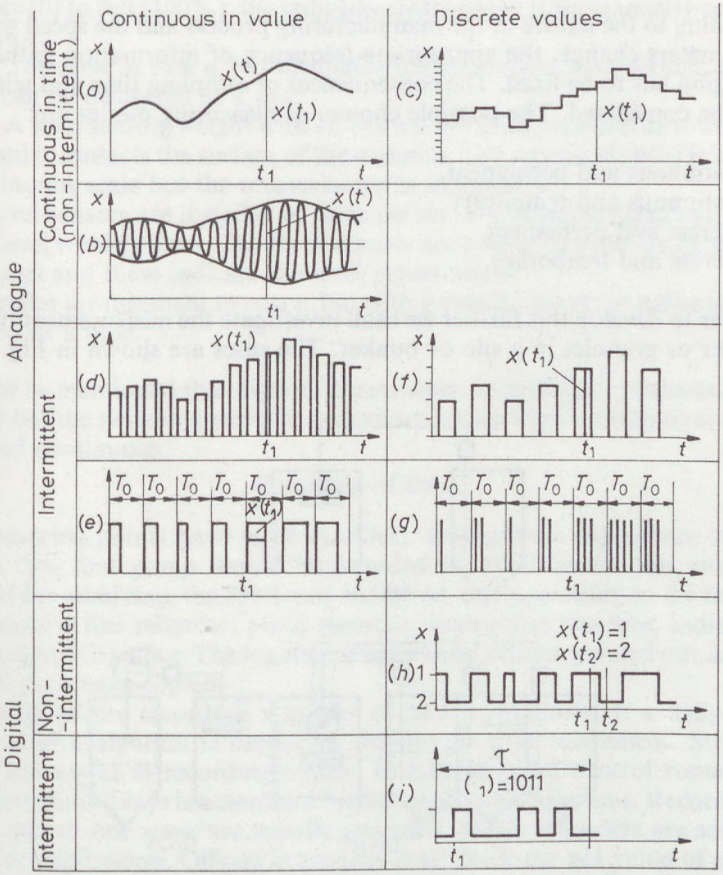


(*a*) continuous, non-intermittent, non-modulated analogue; (*b*) continuous, non-intermittent, modulated analogue; (*c*) discrete value, non-intermittent, non-modulated analogue; (*d*) continuous, intermittent, amplitude modulated analogue; (*e*) continuous, intermittent, time modulated analogue; (*f*) discrete, intermittent, amplitude modulated analogue; (*g*) discrete, intermittent, frequency modulated analogue; (*h*) discrete, non-intermittent, binary coded (digital); (*i*) discrete, intermittent, binary coded (digital)

according to range, there are
—continuous,
—discrete signals.

The main features are shown in Table 1.1, which follows a Hungarian standard.

### 1.3.2 FREQUENCY AND RECORDING OF INFORMATION

According to the nature of the manufacturing process and the speed with which the parameters change, the appropriate frequency of information gathering and data logging has to be fixed. The consequences of sampling time and telemetering have to be considered. The possible choices of measuring modes are:

*(i)* Continuous and permanent.
*(ii)* Continuous and temporary.
*(iii)* Discrete and permanent.
*(iv)* Discrete and temporary.

In order to develop this further we shall investigate the measurement of the level of powder or granules in a silo or bunker. The cases are shown in Fig. 1.3.

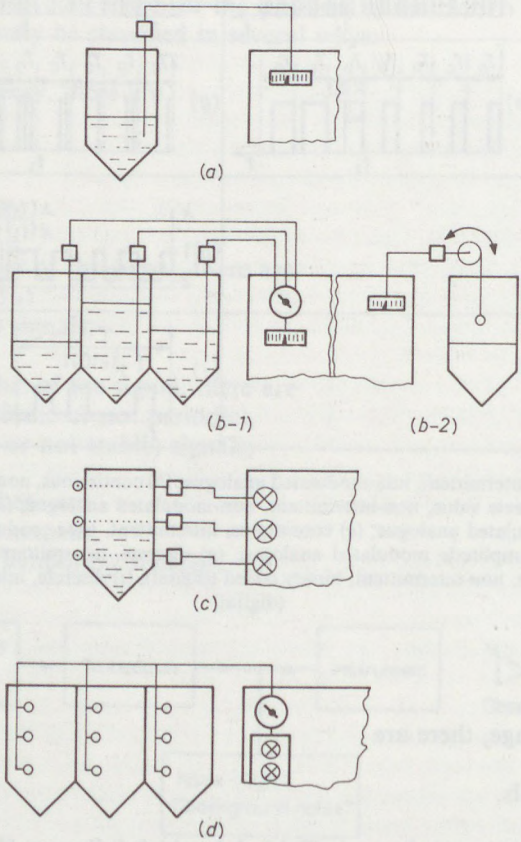


Fig. 1.3 Solids level detection methodology. (*a*) capacitive sensor; (*b*-1) capacitive sensors with selector switch; (*b*-2) measuring cable and switch; (*c*) radioactive level sensors; (*d*) level sensor groups with selector switch

*Case a.* Capacitance level probe, which measures (senses) the level continuously from empty (0) to full (100%); the indicating instrument is permanently connected to the sensor.
*Case b–1.* The same as *case a,* but the indicating instrument has a switch, and only one level can be measured at a time.
*Case b–2.* A level sensing weight with an electric switch is periodically lowered into the silo until it contacts the surface of the material. The measured value is indicated on a continuous scale but the measurement is temporary.
*Case c.* Level sensors are installed at three points (low, middle, high) and indicate when the level reaches them. The three sensors are connected to three lights on the control panel and these indicate the level permanently.
*Case d.* Similar arrangement to *case c,* but with a switch; one set of indicating lights can be seen at a time.

It should be mentioned that digital systems work according to methods *case b–1* and *case d* but the switching period is very short. Indication on a display is virtually parallel and continuous.

*Recording of data*

The measuring points have to be classified, taking their importance into consideration. The first group should be recorded for trend evaluation, the second printed out for archiving, the third only indicated, etc. According to the frequency of supervision a line recorder, point recorder, multipoint recorder, indicator, or indicating light will suffice. The log sheet can be handwritten, printed out, indicated on a display, or hard copied.

The format of the records is a matter of local convention. If a daily routine inspection and evaluation is needed, a circular chart is convenient. Strip chart recorders are useful in recording trends. In computerised control rooms, trend recording on the displays is a standard facility of advanced systems. Records of one shift, one day or one week are usually provided. Single recorders are sometimes installed for supervision. Official inspectors may check the pH value of effluents, or the smoke density. In the pharmaceutical industry, so-called Good Manufacturing Practice (GMP) requires that certain data be printed out in fulfilment of a trace function.

It has to be emphasised that it is not only the measured parameters that are of importance but also the position of valves and diverters; and the running of pumps or compressors has to be recorded in certain plants. Long-term storage of data, which is usually called archiving, is required in response to legal and other regulations. With paper log-sheets and recorded diagrams, archiving was a question of storage, similar to a library. The computerised data acquisiton and magnetic storage of data have introduced several new problems. Data reduction methods and retrieval techniques have to be applied, together with the corresponding hardware and software. Basic software is available from the system vendor; special requirements need programming. It is important to select the variables in the design stage according to archive requirements (storage time, actual or average values, cumulated values, display requirements, etc.). For long time archiving (30 years) optical discs are available.

Table 1.2. Data recording speeds

| Device (method) | Speed |
|---|---|
| Process operator | 16 bit/s |
| Conventional 6 point recorder | 60 s/point |
| Electronic 6 point recorder | 20 s/point |
| Teletype | 10 char/s |
| Card punch | 200–500 card/min |
| Paper tape punch | 33–150 char/s |
| Letter quality printer | 10–60 char/s |
| Matrix printer | 100–400 char/s |
| Line printer | 250–1200 line/min |
| Laser printer | 4000–15 000 line/min |
| Magnetic printer | 4000–6000 line/min |
| Floppy disc | 125–250 kbit/s |
| Magnetic tape cassette | 500 char/s |
| Magnetic tape | 60–300 kByte/s |
| Hard disc | 150–300 kByte/s |
| Optical disc | 200–300 kByte/s |

A special method of recording is the *post mortem* registration. In this mode, all values of a plant or equipment are recorded for a certain time, usually 20–30 minutes. If nothing extraordinary happens the really important values (there are only a few of them) are stored and further processed, while the unimportant values are discarded. If something unusual occurs, such as a quick (emergency) shut down or an equipment failure, explosion, etc., all data from the previous half hour are stored and the origin of the failure can be analysed. By using this technique there is no need to store the enormous amount of plant data measured, but in an emergency all necessary data are available. In conventional systems such *post mortem* recording was very complicated and expensive. Modern automatic data loggers and computers are provided with magnetic storage media (floppy disc, hard disc, magnetic tape) for which writing, reading or deleting are normal functions.

The displays of trend records on the control desks can be copied and stored, or taken for supervision. The recording speeds of various devices are collected in Table 1.2.

*Frequency and speed of data processing*

In flow metering, integration is necessary if the cumulative quantities are to be determined. The time interval of integration has to be specified (e.g. one hour, 8 or 24 hours). Rotating flowmeters usually output a frequency of impulses proportional to the flow. Data loggers and computers cannot directly receive these pulses, so a special integrating and transmitting device is required.

In large plants, having several hundreds or thousands of measuring points, the scanning time is of great importance with regard to the material and energy balance calculations. Optimisation of processing speed, location and scanning is of great assistance.

### 1.3.3 ACCURACY OF MEASUREMENT

*Requirements*

It must first be decided if a specified accuracy is necessary at all, or whether only general information is needed. Standard classification groups are:

1. overview,
2. process monitoring,
3. acceptance tests,
4. cost accounting purpose,
5. on-site verification,
6. laboratory measurement.

Increasing accuracy entails consideration of the capital cost of the instrument, its depreciation rate and the higher maintenance costs. Instrument maintenance and verification costs increase with accuracy because shorter calibration intervals, highly qualified personnel and expensive repair shops are necessary. The price of calibration equipment is also higher. The economic accuracy has to be investigated in greater detail.

*Accuracy prescribed by technology*

In the technical description of requirements the important parameters (temperature, pressure, pH value, etc.) should be stated and their values and tolerances, or the accuracy of their measurement or control incorporated. This is not always properly done. It is common practice that the chemists responsible for the technology in the laboratory or pilot plant simply multiply the data of the formulae by the scaling factor of the plant. If both numbers have been found to several decimal places, their multiplication will give a number with many figures, which is misleading for the instrument engineer. Flow measurement usually has an overall accuracy of 1%, and to quote a volume to 5 or 6 digits is of no value. A thorough investigation of the process, aided by experiments, can lead to a design of economic accuracy.

*The effects of sampling time*

The frequency of measurements influences the accuracy, and vice versa. For trend recording or flow integrating, the scanning speed has to be adjusted to the changing speed of the process variable. Obviously it is not possible to measure accurately the trends of a rapid process by an instrument which has a slow sampling speed. The well-known law of sampling applies

$$f_s > 2f_m, \tag{1–2}$$

where $f_s$ = sampling frequency and $f_m$ = frequency of measured process.

On the other hand, the accuracy of an analogue-to-digital converter depends on its resolution, and higher resolution means a longer converting time. An analogue–digital converter (ADC) with 8-bit resolution has an accuracy of 0.4%, while a 12 bit ADC represents 0.025% accuracy. There is no theoretical limit to accuracy, but the time and cost of the ADC provide practical limits.

### *Various factors affecting accuracy*

It has to be checked whether there are other effects—ambient, or inherent in the process—which have a greater influence on the actual value of the variable than the accuracy specified. These include the ambient temperature, frequency fluctuations or voltage drops on the power line, etc. The process analysers working on physical principles (e.g. density, viscosity, dielectric constant and thermal conductivity measurements) are usually not selective for one component of the gas or liquid. The influence of each component has to be carefully evaluated in order to avoid unexpectedly large errors after installation. In the case of infrared absorption gas analysers the analysis of hydrocarbon mixtures can be frustrated because of the overlapping spectra of the various components. With thermal conductivity gas analysers, the variation of the hydrogen content of the gas sampled influences the thermal conductivity to such an extent that the determination of another component (e.g. $CO_2$) is impossible. The water vapour content or humidity of gases affects both analysis and flow measurement.

If fluid flow is measured with a glass tube variable-area flowmeter (rotameter), the density, temperature and pressure conditions at which the instrument functions are engraved on the glass tube. If the parameters in the plant lie outside these prescribed limits the accuracy of the indicated flow is not guaranteed.

To illustrate the effect of temperature variation, note that a rise in temperature of 20 °C (e.g. from 15 to 35 °C) of the air being measured means a 4% variation in flow; but the same temperature difference means a 20% flow variation when hydrogen gas flow is being measured.

Finally, we consider questions of noise level. When electrical telemetering equipment is being used, the grid power supply forms a source of noise. The measured variable can produce noise (e.g. the waves of a liquid surface in level measurement). The sensor, the transmission line (by the inductive effect of high voltage power cables, EMI—Electromagnetic Interference), the receiving instruments and amplifiers can all generate noise. The most important sources of noise are shown in Table 1.3. The problems of noise analysis and suppression became apparent with the use of highly sensitive digital equipment. The installation of electronic data loggers with high speed and very sensitive digital voltmeters, ADCs and computers, led to the discovery that the broad noise spectrum disturbed the proper functioning of the instruments. After much investigation and innovation it became evident that many traditional measurements were not truly stable, but the long time constants, attenuation and low sensitivity had made it impossible to perceive this fact. The operators did not realise that they were measuring fluctuating, noisy values.

Table 1.3. Electrical noise sources

| Source location | Normal mode disturbances (or differential mode) | Common mode disturbances |
|---|---|---|
| Internal noise sources | Process noise<br>Local electrochemical effects (galvanic cells) at the connections<br>Local thermocouples at the connections<br>Drift of the amplifiers, electronic noise<br>Faulty elements, wrong and uncertain contacts | Common mode noise as a result of multipoint earthing and asymmetric circuits<br>Normal mode disturbance through asymmetric circuit |
| External noise sources | Disturbances between two circuits connected through a common impedance (e.g. common earth or power supply) | |
| Interference between two signal lines | Induction by magnetic field | |
| | Interference by electrostatic field | Earth potential differences<br>Capacitive noise |
| Radiation by electromagnetic field<br>Electromagnetic Interference (EMI) | | Electrical conduction between two circuits resulting from various effects, e.g. moisture |

Electrical noise can be classified into two groups:

*Common mode noise* appears on both sides of the power line;
*Normal mode noise* comes from electrical equipment plugged into the same line, and appears on only one side of the line.

We shall return to this question in Chapter 11, in connection with electric cabling. The effect of noise in the case of digital computer control can be reduced by software methods. Digital filtering is an effective way to reduce noise. The simplest method is to compute the arithmetic mean value of a predetermined number of previous measurements as the accepted value. Other algorithms are also in use.

The standard of accuracy of the instruments can be specified by considering the traditions of the plant or branch of industry, the available maintenance crew, the robustness of the equipment and the ambient effects. In the 1950s the accepted accuracy was not better than 1.5%, but later 1% was generally required and in the 1980s 0.5–0.25% class instruments are generally offered by the leading manufacturers. Several flowmeters and weight scales have accuracies as good as 0.1%. In industrial practice one has to be careful before one can accept such figures [9.9].

### 1.3.4 WARNING AND PROTECTING SYSTEMS

Each measured value in a process plant may have a high and a low limit which must not be violated under normal operating conditions. Although this is a generally valid statement, there are relatively few variables in a real process which are of true importance, the off-limit values of which can upset the equilibrium of the process and which therefore have to be incorporated in an alarm system or annunciator.

Such variables might be events or measured values or calculated values. To specify the correct location and the limits (set points) of alarm signals is a very important task in process control system design. Too few alarm points are dangerous, because safety may not be allowed to depend solely on the human operator. Too many alarm points are not only expensive but useless, because the operator cannot distinguish between a significant and a less significant alarm signal. The frequent sounding of alarm signals is confusing.

Computer control and automatic scanning increased the possibilities and therefore the importance of alarm systems, allowing the application of new methods. The standard annunciators are usually electrical devices connected to instruments with switches. The human operator has to acknowledge the alarm signal. In plants where several alarm signals could occur within a very brief period, the signalling of the first alarm is useful.

Data loggers and Programmable Logic Controllers (PLCs) usually have built-in limit control facilities, and can perform alarm functions, too. The out-of-limit values are printed in red, and many systems have special fast alarm printers. Computer control systems can perform warning operations, given adequate software. On the process operator console there is usually one display dedicated to alarm functions. A limit control algorithm is one of the most frequently used subroutines. Figure 1.4 shows the flow diagram of such a limit control algorithm. The supervised measured value is $x_i$.

A further possibility is afforded by computer control: the analysis of alarm conditions. Fault trees (see Chapter 3) and combinatorial analysis allow the development of logic equations which help the operator to decide whether or not the alarms represent a real danger, and how he has to react. If there are two feed pumps, a low pressure alarm can start one pump or the auxiliary pump, but if both pumps are running and the low pressure alarm persists, there might be a pipe leakage [1.12].

Another method is the antivalence or security control for the supervision of valves and actuators. The terminal switches usually have one pair of contacts which are normally open or closed, depending on the position of the actuated final control element (e.g. valve). In the case of a failure, the alarm system cannot detect it because it senses either a closed or an open contact, i.e. a 0 or a 1 signal. To achieve greater reliability two pairs of terminal contacts are used, one normally open and one normally closed. In this system the warning alarm can distinguish between true 0 and error 0 and true 1 and error 1 according to the Boolean equation

$$(\bar{x} \wedge y (\vee) x \wedge \bar{y}) \tag{1–3}$$

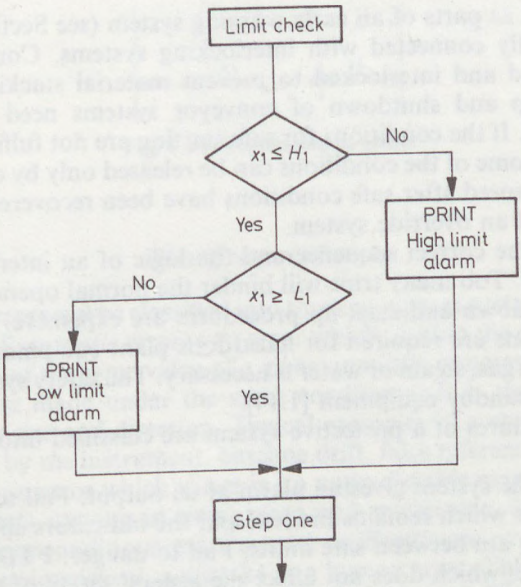


Fig. 1.4 Limit control algorithm. $H_1$ high limit for $x_1$; $L_1$ low limit for $x_1$

and we can see the effect of this equation from the following set of signals (truth table):

| valve position | simple system | security system |
|---|---|---|
| closed | 0 | 01 |
| open | 1 | 10 |
| line break | 0 | 00 |
| switch jammed | 1 | 11 |

From the above table it is clear that in the security (antivalence) system the antivalent signals imply normal functioning and the even signals mean that a failure has occurred.

The instruments and transmitters can be checked for correct functioning by supervising the change of the indicated value. Too quick a change, or no change at all, means a failure. There are computer programs available for checking the confidence limits of the measured values, for disturbance analysis (including fault recognition aids) and for on-line testing.

It is common practice in the chemical and allied industries to include the utilities in the alarm system. Cooling water, steam and instrument air pressure or flow are monitored by pressure and flow switches. Electrical power supply failure has also to be announced. Constant monitoring of rotating equipment is essential, which means bearing temperature alarm, lubricating oil pressure or flow alarm, etc., and

vibration analysis as parts of an early warning system (see Section 1.2.1.). Alarm systems are usually connected with interlocking systems. Conveyor movement should be checked and interlocked to prevent material stacking and overflow. Similarly, start-up and shutdown of conveyor systems need interlocking and sequence controls. If the conditions for safe starting are not fulfilled, the interlock prevents a start. Some of the conditions can be released only by operator intervention, some are restored after safe conditions have been recovered. The latter type of system is called an override system.

The design of the correct sequence and the logic of an interlocking system is fairly complicated. Too many trips will hinder the normal operation of the plant. Unnecessary shutdown and start-up procedures are expensive. Emergency shutdown safety systems are required for hazardous plant equipment. In many cases flooding with inert gas, steam or water is necessary. The safety system also depends on the available standby equipment [1.14].

The possible failures of a protective system are classified into three groups:

(*i*) safe failure: the system gives an alarm at its output; Fail to safe: FTS.
(*ii*) unsafe failure: which remains hidden, and the indicators show that the measured value(s) are between safe limits; Fail to danger: FTD.
(*iii*) neutral failure: which does not affect the general safety of the plant.

The various types and structures of alarm and safety systems are dealt with in Chapters 9 and 10.

### 1.3.5 MEASUREMENT ERROR THEORY

There is an abundant literature on measurement error and its calculation [1.10]. What follows represents a brief survey of error calculation theory and practice. The departure of the stated value from the true value of the quantity constitutes the error of measurement. In instrumental measurements, the error is represented by the difference between indicated and true values, i.e. error = measured − true value

$$H_i = x_i - x_o. \tag{1–4}$$

Theoretically it is impossible to determine the true value from inaccurate measurements, but in practice it is calculated from the arithmetic mean of a series of measurements (see Eq. 1–6).

In industrial practice the relative error is used instead of the absolute error. The relative error is generally given as a percentage of the absolute error of the true value

$$h_i = \frac{H_i}{x_o} 100. \tag{1–5}$$

It is common practice to use the term accuracy, rather than error, when speaking about an instrument or measurement. Figure 1.5 shows the meaning of the definitions.

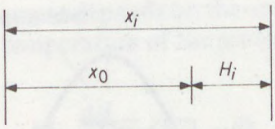


Fig. 1.5 Interpretation of errors

*Classification of errors*

The types of errors can be classified into three groups, as systematic, random and parasitic errors. *Systematic error* is an error which, during the course of a number of measurements of the same value of a given quantity, remains constant when the measurements are made under the same conditions. It is usually generated by effects of regular size and direction. Typical examples of systematic error are the effect of loading by the instrument, baseline drift, false reference temperature, etc. *Random error* is an error which varies in an unpredictable manner. It is generated by irregular effects varying in time, place and magnitude. Such effects can be vibrations, ambient conditions, etc. *Parasitic or illegitimate error* is an error which is the result of a unique event, a mistake or a human error. This usually has a high value and is thus relatively easily detected and eliminated. The aim of the instrument engineer is to get rid of all three types of error, so far as is possible and economic.

*Standard deviation of measurements*

The theory and calculation methods for the evaluation of a set of observations are well established. In most countries standard rules are recommended for calculations.

The arithmetic mean of a set of measurements is

$$a = \frac{1}{n} \sum_{i=1}^{n} x_i, \tag{1–6}$$

where $n$ is the number of measurements.

The *standard deviation* may be estimated from the root mean square of the deviations of individual observations from the arithmetic average of the set

$$S = +\sqrt{\frac{1}{n-1} \sum_{i=1}^{n} (x_i - a)^2} \tag{1–7}$$

or the variance

$$S^2 = \frac{1}{n-1} \sum_{i=1}^{n} (x_i - a)^2. \tag{1–8}$$

In the case of large sets, when $n \to \infty$, $S \to \sigma$ where $\sigma$ is the standard deviation.

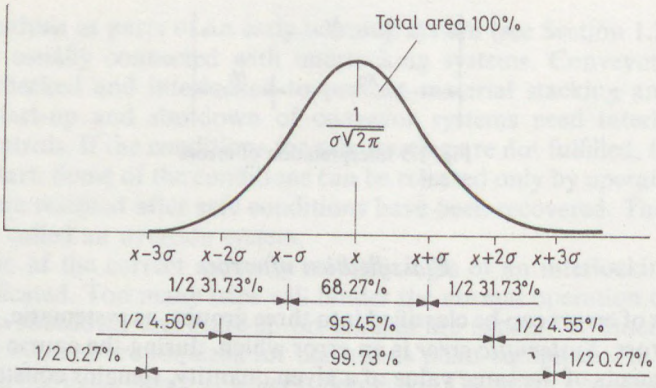


Fig. 1.6 Error distribution (Gaussian)

The probability $W_a$ that the error of one individual measurement will be greater than a preset limit $\pm\varepsilon$ is, according to Chebyshev

$$W_a \leqq \frac{S^2}{\varepsilon^2}. \tag{1–9}$$

If the errors are stochastic and the error distribution follows the normal (Gaussian) distribution, the calculated probability that the error lies between the standard deviation limits (the confidence level) is as follows:

| error within | probability |
|---|---|
| $\pm 1\ \sigma$ | 68.3% |
| $\pm 1.96\ \sigma$ | 95.0% |
| $\pm 2.58\ \sigma$ | 99.0% |
| $\pm 3.0\ \sigma$ | 99.7% |

These values are shown in Fig. 1.6. These figures do not apply to other error distribution laws.

*Dynamic errors*

The previous paragraphs dealt with static measurements and their errors. In industrial practice, the values of measured quantities change over time. In this respect the dynamic behaviour of the instruments and measuring systems has to be investigated. Friction and hysteresis influence the dead time or time lag of the instrument. To evaluate the effect of dynamic behaviour on error, consider the case of a mercury thermometer. The differential equation governing the change of bulb temperature with time should be derived.

Heat flow to the sensing element depends on the area, temperature difference and heat transfer coefficient: the temperature of the sensor varies with time $t$ according to the differential equation

$$Mc\frac{d\vartheta}{dt}=Ak(\vartheta_e-\vartheta), \tag{1–10}$$

where $M$ — mass of the bulb;
$c$ — specific heat of the bulb;
$A$ — area surface of the sensor;
$k$ — heat transfer coefficient;
$\vartheta$ — measured indicated temperature;
$\vartheta_e$ — temperature of the environment.

$T=\frac{Mc}{Ak}$ is the time constant of bulb, so we can write Eq. (1–10) in the form

$$T\frac{d\vartheta}{dt}+\vartheta=\vartheta_e. \tag{1–11}$$

In the case of a sudden change in $\vartheta_e$, say $\Delta\vartheta_e$ (a step change), the solution of the differential equation is

$$\Delta\vartheta(t)=\Delta\vartheta_e(1-e^{-\frac{t}{T}}) \tag{1–12}$$

or, after rearrangement

$$\frac{\Delta\vartheta}{\Delta\vartheta_e}=1-e^{-\frac{t}{T}}. \tag{1–13}$$

For a constantly changing (ramp) temperature of the environment, say

$$\Delta\vartheta_e=ct$$

the solution of the differential equation is

$$\Delta\vartheta(t)=c(t-T+Te^{-\frac{t}{T}}). \tag{1–14}$$

This shows that the time constant causes a steady lag, and consequently an error of measurement. If the temperature $\vartheta_e$ changes periodically, the error depends on the time constant and frequency. In Fig. 1.7 the posible dynamic error is indicated for these cases.

Values of the time constants can be quoted in different ways. The time which is required for the system to reach a steady temperature, 0.5 $\vartheta_s$, is called the half time (in German: Halbwertszeit) and is quoted as $T_{0.5}$. Another value is used for time required to reach 90% of $\vartheta_s$ and this is quoted as $T_{0.9}$. If the temperature change is exponential, the value of $T_{0.5}$ is 0.69 $T$ because

$$\frac{x}{x_0}=e^{-\frac{t}{T}} \text{ and } 0.5=e^{-0.69}. \tag{1–15}$$

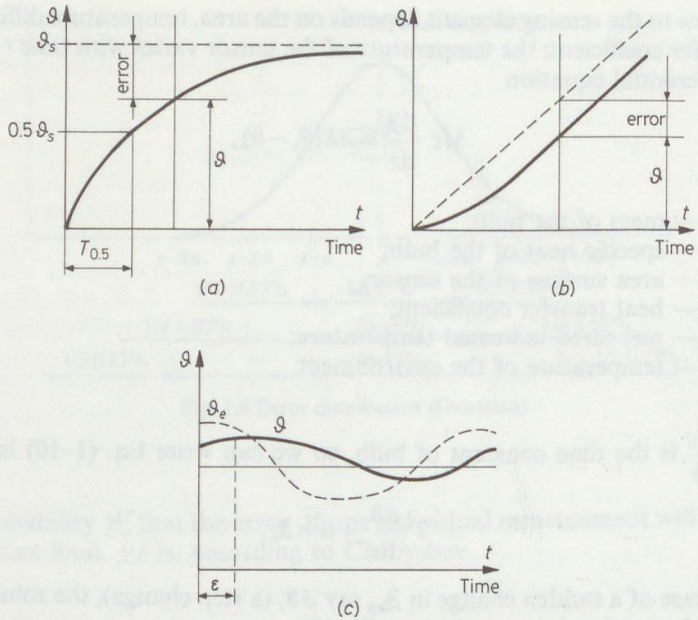


Fig. 1.7 Dynamic error of temperature measurement. (*a*) step change; (*b*) linear change (ramp); (*c*) periodic change (sine wave)

In the case of a step change, $3T$ time is needed by the sensor to attain 95% of the change.

Errors due to false installation of the sensing element or the protecting tube indicated in Chapter 5.

Example: The time constant of a mercury thermometer is 5 min. If it is moved from the laboratory, where its temperature was 17°C, to a cool chamber where the temperature is −3°C, the thermometer will show 7°C after 3.5 minutes. After 15 min it indicates −2°C, and we have to wait 20 minutes to achieve a temperature difference of 0.5°C, which is acceptable.

Dynamic error also appears if a pulsating flow is measured by orifice meters. Turbine flowmeters have dynamic errors if the flow is pulsating or changing very rapidly. The speed of the turbine follows the changes with a delay, and this can result in an error in the indication.

## 1.4 INSTRUMENT TECHNOLOGY

Control system design requires a knowledge of the main features of instruments, their fundamental types, their reliability and their maintenance. No deep insight is necessary, this being the province of the instrument designer and manufacturer.

### 1.4.1 GENERAL SPECIFICATION

Metrology covers the field of knowledge concerned with measurement. Exact definitions and terms can be found in the relevant national and international standards (e.g. BS 5233).

Two principles are used in measurements, being the direct and the indirect, or comparison, principles. The direct method of measurement is that by which the value of the quantity to be measured is obtained directly from observation of a deviation. An example is a spring balance weight scale (see Fig. 1.8*a*).

Comparison or compensating methods use a compensating force, momentum or electric voltage (EMF) set against the measured value to reach full compensation. These are therefore sometimes called zero or null methods. An example is an equal-arm weight scale, where the force exerted by the weight of the object is compensated by that of the balance weights (Fig. 1.8*b*).

The range, sensitivity, accuracy, reproducibility, and index scale are the important general features which have to be specified. The linearity, drift, hysteresis, temperature coefficient and bias are usually specified, too. In modern instrumentation the use of microelectronics is increasing, which means that several quantities relating to this technique have to be specified.

The instruments are allotted to accuracy classes according to the error of measurement. There are standard accuracy classes (e.g. 0.1, 0.2, etc.). The conditions which must be satisfied if the specified accuracy is to be achieved are called the reference conditions. The manufacturer's guarantee is valid only if the reference conditions are maintained. Such conditions may be room temperature, humidity, power line frequency and voltage, etc.

### 1.4.2 RELIABILITY

Instruments and control systems have to be very reliable for field service. The term 'reliability' is used in different senses. An international standard states that reliability is the ability of an item to perform a required function under stated

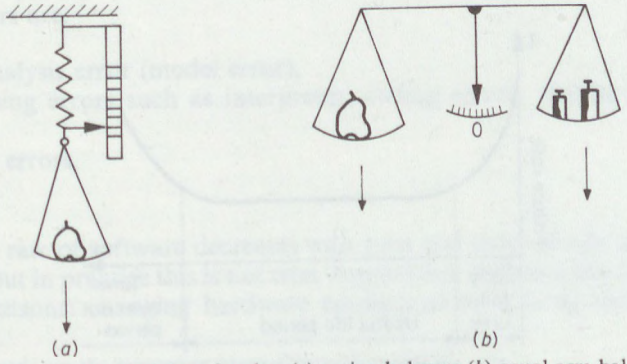


Fig. 1.8 Measuring principles of scales. (*a*) spring balance; (*b*) equal-arm balance

conditions for a stated period of time. Unfortunately, different failures can cause a shutdown or malfunction of instruments and control systems.

To get numerical figures of reliability it is necessary to perform calculations. The theory of reliability uses mathematical methods of probability, and is highly developed. True reliability $R(t)$ is the probability $P$ of an item functioning for a duration $t$, i.e. that its life $x$ exceeds the duration $t$. This reliability function is

$$R(t)=P(x>t). \tag{1–16}$$

The cumulative distribution function is the probability that its value is less than or equal to a stated value

$$0 \leq F(t) \leq 1 \tag{1–17}$$

and the relationship is

$$R(t)=1-F(t). \tag{1–18}$$

The failure rate is a measure of failures occurring in a given time interval. It is generally time dependent

$$\lambda(t)=\frac{\text{number of failures}}{\text{unit time}}. \tag{1–19}$$

If the failure rate is constant, true reliability becomes

$$R(t)=\exp(-\lambda t) \tag{1–20}$$

and

$$F(t)=1-R(t)=1-\exp(-\lambda t). \tag{1–21}$$

The mathematical theory of reliability has an abundant literature [1.10] and several standards deal with this subject (e.g. BS 5760). The typical failure rate curve is shown in Fig. 1.9. The so-called 'bath tub' curve has three distinct parts. The first

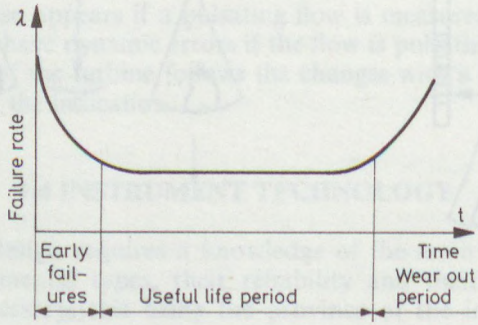


Fig. 1.9 Fall-out curve (failure rate curve)

Table 1.4. Instrument reliability in chemical plants [1.13]

| Instrument type | Failure rate, $\times 10^{-6}\ h^{-1}$ | MTBF, yrs |
|---|---|---|
| Analogue panel instrument | 0.5 | $2 \times 10^2$ |
| Digital panel instrument | 5 | 20 |
| Pneumatic controller | 7 | $0.13 \times 10^2$ |
| Electronic controller | 1 | $1 \times 10^2$ |
| Electropneumatic transducer | 10 | $0.1 \times 10^2$ |
| Electric transmitter | 10 | $0.1 \times 10^2$ |
| Control valve | 6 | $0.14 \times 10^2$ |
| E1.6 point recorder | 30 | 3 |
| Line recorder | 24 | 4 |
| Analogue multimeter | 2 | $0.5 \times 10^2$ |
| Digital precision voltmeter | 50 | 2 |

part is the early failures or learning period, which is commonly called the 'teething troubles' period. The second part is the constant failure rate period, and the third is the wear out period.

An important measure of reliability is the elapsed time between two failures (Table 1.4). The term Mean Time Between Failures (MTBF) is commonly used. A failure has to be repaired, which also takes time. The Mean Time To Repair (MTTR)* is calculated, and with it the availability of the system can be calculated as

$$A = \frac{MTBF}{MTBF + MTTR}. \tag{1–22}$$

Other investigations have shown that the probability of a malfunction can be estimated, and the security calculated. Note that the time of waiting for repair has to be added to the time of repair.

Computer control introduced a new type of failure into the plant: software failure. Consequently we have to consider software reliability. The sources of software errors are:

— systems analysis error (model error),
— programming errors such as interpreter, coding errors, writing errors, logic errors,
— arithmetic errors,
— time error.

The failure rate of software decreases with time and theoretically approximates zero failure, but in practice this is not true. Application software has to be changed for several reasons: changing hardware configuration, altering technology and

* Some standards use the expression Mean Down Time (MDT).

equipment in the process plant, developing faster programs, etc. Altering a program means that new failures may be created and, because the changes usually have to be made in a hurry, the documentation is not always adequate. After a few years it can happen that nobody has any insight into the program and in the case of a failure debugging is very time consuming. The failure rate begins to increase and it is cheaper to adapt a new program. This is similar to the lifetime of the hardware [1.7].

Special quality assurance and debugging methods have been developed to minimise software errors and increase software reliability.

### 1.4.3 INSTRUMENT SELECTION

*Measurement range selection*

The first task in range selection is the calculation of the lowest, highest and average values of the measured variable. Determination of the required accuracy of observation follows. Range and accuracy are closely correlated. In Fig. 1.10 the ratio of measurement error and instrument accuracy is shown as a function of range. Instrument error is quoted as a percentage of the upper limit of its range, and with this absolute error value the fractional error of a measurement increases with decreasing value of the measurement. Below 15% of the full scale (span) the measurement error increases rapidly, and this area should be excluded from the working range.

In the chemical industry it is common practice to have the average (normal operating) value at about two thirds of the span. Thus, to measure the pressure of a vessel working at 40 Pa, we select a pressure gauge with 0–60 Pa span. There are several recommendations for span selection (e.g. those of the EEC) which state that a flowmeter should have an accuracy of ±1% for flows above 20% of the upper range limit and ±2% below 20%. In the case of large variations of the measured

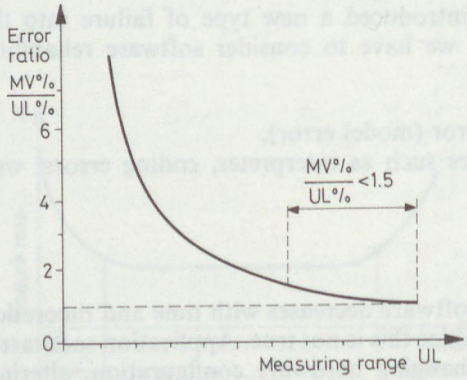


Fig. 1.10 Measurement error distribution. MV measured value; UL upper range limit

value, a multirange instrument or two instruments of different ranges are necessary.

In the upper range limit specification, any foreseen expansion of plant capacity should be taken into consideration, although it is not recommended to select instruments with too large a span and thus to measure inaccurately for years. The capacity of a chemical plant is usually increased after reaching its nominal value, by innovation or retrofitting. Instrumentation should be able to follow such an increase without any major changes.

The selection of measurement range also depends on the startup and shutdown procedures and frequency. Abnormal conditions (e.g. reverse flow) can adversely affect an instrument that has not been well specified. In the pharmaceutical industry, sterilisation of the equipment is a special condition, and the related instrumentation has to be capable of withstanding it.

In some cases (e.g. positive displacement flowmeters) the measuring range has an effect on the life of the instrument. If high accuracy is required in a narrow range, a suppressed zero range instrument may be selected.

Special attention has to be paid to the selection of the measuring range of gas analysers and detectors. The accuracy of gas analysers is generally lower than that of other instruments, so a narrow span would be advantageous. On the other hand, the calculation of average values is not easy, especially with trace analysers which are working in the ppm (parts per million) range, an order of magnitude mistake is possible.

*Maintenance considerations*

Maintenance is an important aspect of instrument selection. Repair, verification, calibration, replacement, spare parts supply and back up are the principal activities that fall under this heading. It is advantageous if all instruments are fitted together, which can be done in two ways. One strategy is to purchase instruments from one source, possibly one manufacturer. The large, widely known instrument manufacturers can supply up to 90% of the instruments and accessories required. This does not mean 90% in cost terms, because the highly specialised analysers are supplied by few manufacturers but are expensive.

The other way is to select one type of instrument for each task, and this strategy has the advantage that the best make can be selected for every task. For pneumatic instruments this is an easy job, but for electrical, and especially for digital instrumentation it is rarely possible to connect elements supplied by different manufacturers into a common system without some difficulties.

The responsibility for the correct functioning of the control system falls in this case on the user or main contractor.

Similarly, the use of microprocessors and microcomputers for control poses the alternatives of selecting one type for all purposes and thus facilitating hardware and software maintenance, or purchasing equipment and machines with their microprocessor control devices, which is cheaper and guarantees that they are best suited to their tasks, but generally involves different types. Maintenance and software compatibility will then be more expensive.

There are several aspects of safety in respect of instrument selection. In most countries there are national safety codes and standards or recommendations regulating plant safety. Evaluation of the potential danger of technologies, plant and equipment according to these regulations is essential. Plants and factories are grouped in various classes, depending on possible hazards. Hazardous areas are classified according to national standards (see Chapter 11) and instruments have to be selected in accordance with these standards and safety codes.

Where safety considerations are of major importance, special fault-tolerant instrumentation can be selected. There are built-in safety features such as thermocouple break or burn-out protection. Analysers can be equipped with fault alarms, and instruments equipped for working with radiating isotopes have special safety devices. Control computers have self-diagnosis programs for routine checking at predetermined intervals. Double instrumentation is required at very important measuring points. Boiler codes usually specify two level indicators, working on different principles. Special safety telemetering systems are used to avoid faulty actions. A well-known system works with three signals and accepts the transmitted value only if at least two are identical. It is commonly called the 2003 system (two out of three) and is well proven. Another system periodically sends low energy test signals through the measuring and alarm instrumentation which do not activate the circuits but supply a diagnosis of its temporary status.

Economic calculations are necessary to decide whether the risk of a failure justifies the cost of the safety system. A defective flowmeter may mean that the steam consumption of a plant item will not be metered for several hours, but a failure in the temperature measurement of a chemical reactor might result in an off-specification product or a costly shutdown [1.13].

When designing a control system, the effect of power failure has to be considered. The final control elements have to move to a safe position and the whole system has to reach a safe status. To achieve safe systems, they have to be designed for the worst case, with redundancy and self-checking signalling, shown previously [1.3.4].

### 1.4.4 THE ENVIRONMENT

Environmental conditions have to be considered in design and specification work. The climate of the site where the plant will be erected comes first in this respect. Standard equipment is usually not adequate for cold (e.g. −40°C) or tropical climates.

Protection of electrical equipment against environmental effects is standardised. Table 1.5 gives a selection of the most important features. The microclimate of the chemical plant has to be investigated to discover the nature of the environment. A corrosive atmosphere, high temperature, rain, snow, dust, high relative humidity, possible damage due to insects, risk of mechanical damage, shock, vibration, solar radiation, magnetic field, etc., might all be on the list (see e.g. BS 2011).

Earthquake danger can demand unusual solutions. Ambient temperature has the greatest influences on the operation of sensors and transmitters. Freezing, crystallising or boiling of the fluids in the sensors, transmitters and their connecting

Table 1.5. Enclosures for electrical products

I. European Standards, IP notation

| First number | Second number |
|---|---|
| Protection of the personnel against direct contact with the inner rotating parts or parts under high voltage | Protection of the product against water |
| 0 No special protection | 0 No special protection |
| 1 Protected against intrusion of large surfaces of the body (e.g. hand) and solid foreign bodies larger than 50 mm, but not protected against wilfull access | 1 Protected against water droplets falling vertically |
| 2 Protected against foreign bodies larger than 12 mm (medium size body) e.g. fingers of the workman | 2 Protected against falling water droplets even in 15° tilted position |
| 3 Protected against intrusion of tools, wires and similar objects larger than 2.5 mm width (small size body) | 3 Protected against rainfall even if it is not vertical, no detrimental effect can be identified |
| 4 Protected against intruding objects larger than 1 mm (including grains) | 4 Protected against splashed water from any direction (water spray proof) |
| 5 Totally protected against outside contact, dust-tight but dust is not totally excluded | 5 Protected against a water jet from all directions |
| 6 Totally protected against outside contact and fully dustproof | 6 Protected for sea service, may be overflowed (flooding) |
| | 7 Water immersion type, under specified conditions of pressure and time duration |
| | 8 Immersion type protection, for immersion under water service specified by the manufacturer |

II. NEMA specification

| | |
|---|---|
| 1 General purpose, indoor | 2 Drip-proof, indoor |
| 3 Dust-tight, rain-tight and ice resistant, outdoor | 4RR Rainproof and sleet (ice) resistant |
| 3S Dust-tight, rain-tight and sleet resistant outdoor | 4K Water-tight, dust-tight and corrosion resistant, indoor and outdoor |
| 6 Submersible watertight, dust-tight and sleet resistant, indoor and outdoor | 7 For hazardous locations, Class I, Div I, Group A, B, C or D, indoor |
| 8 For hazardous areas Class I, Div I Group A, B, C and D indoor, oil immersed equipment | 9 For hazardous location Class II, Div I Group E, F or G, indoor |
| 10 Mining Enforcement Safety Administration (MESA) | 11 Corrosion resistant and drip-proof, oil immersed, indoor |
| 12 Industrial use, dust-tight and drip-proof, indoor | 13 Oil-tight and dust-tight, indoor |

*Note:* Enclosures may be ventilated or non-ventilated. Various types of ventilation are described in the standard, from convection ventilation to evacuation forced ventilation with inlet air filter and outlet air filter.

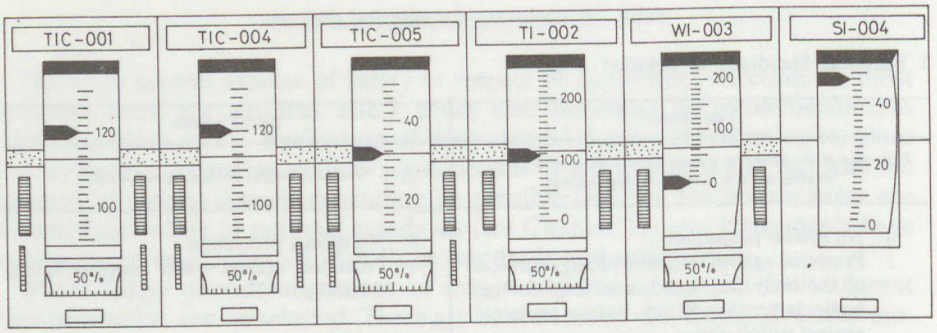


Fig. 1.11 Null-trend instruments (GRW)

pipes should be avoided by the application of heat insulation, heating or cooling. In the case of vapours and gases, condensation is a possible source of difficulty.

Special care should be taken in the application of semiconductors [ICs (integrated circuits) and microprocessors], which are generally heat sensitive, and earthing problems may also arise.

### 1.4.5 HUMAN ENGINEERING

The human operator is the core of a process control system. Design must take account of his physical and psychological abilities, his wishes and his comfort, not forgetting the social factors. Many scientific disciplines deal with this problem, such as psychology, ergonomy, sociology and human engineeering. It is beyond the scope of this book to treat the aspects of these sciences to be considered in process control, but some correlations will be mentioned. The shape and layout of instrument scales and panels, control desks and displays for control systems are designed according to the results of the above-mentioned sciences.

The trend towards miniaturisation, which has led from large conventional instruments to small-size panel instruments, is well known. A second step in miniaturisation was the introduction of densely packed, moving-scale instruments (e.g. Quick-scan,* Null-trend**) which enabled the operator to supervise five or six instruments at a glance. Red pointers and green transparent ribbon in the middle of the housing facilitates the operator's work. An example is shown in Fig. 1.11.

The next trend was to avoid mechanical parts and replace the moving pointer by light emitting diodes (LEDs) or liquid crystal (LC) illuminated bar presentations. The digital scale is the other trend on panel instruments. The height, shape and colour of numbers and letters or signs varies. It is not always better to use a digital scale. The human eye is very sensitive in detecting whether two lines coincide, and the conventional graduated scale was the result of this recognition. The instantaneous situation can be better estimated on an analogue scale than by reading a

* Trade mark of Taylor Instrument Co. (USA).
** Trade mark of GRW (Germany).

number. With computer control, the panels and their instruments disappear and the operator has to work with displays. Chapter 9 explains some aspects of their ergonomy, and in Chapter 10 the shape of the display presentation is explained. The registration of parameters is useful in evaluating the trend of variation of a process. The diagrams help diagnosis and prediction of plant operation. Computer control systems also use this technique.

New representations are being developed to analyse the multivariable control of processes. Using computer control, it is possible to achieve a Total State Presentation. This so-called Wolff diagram has three circles or multiangle polygons to represent the normal state and low and high limits. Each variable is represented by a vector which is normally green but turns red at off-limit values [1.15]. This ergonomically elegant presentation is shown in Fig. 1.12.

### 1.4.6 ECONOMIC CONSIDERATIONS

Two examples show the factors taken into account by large chemical companies during instrument evaluation.

Example *(a)*:
— local service availability,
— serviceability,

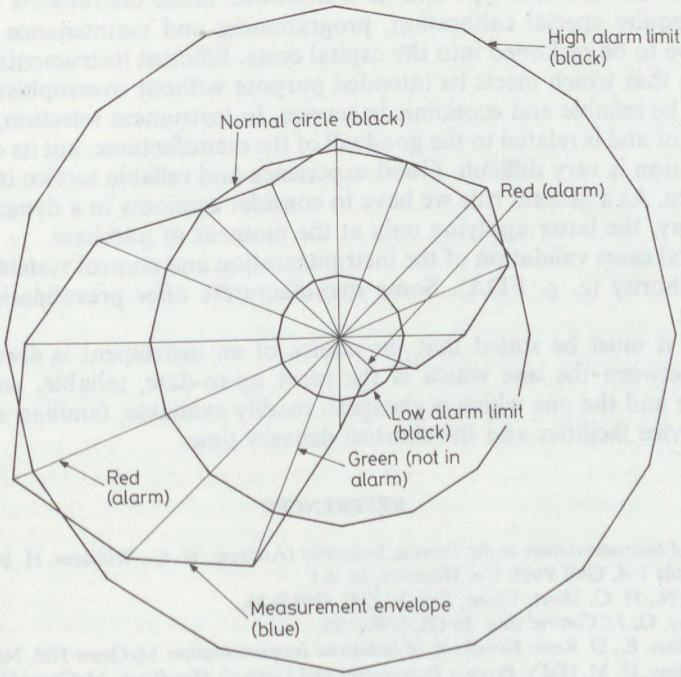


Fig. 1.12 Total state presentation (Wolff diagram)

— proper design,
— easy manipulation,
— easy maintenance,
— robustness,
— reliability,
— price.

Example *(b)*:
— prompt delivery/availability,
— competitive pricing policy,
— local or field service availability,
— technical assistance, expertise,
— ease of installation/maintenance,
— complete product line,
— repair parts availability,
— others (e. g. prevalidation).

These lists show that price in itself is not a deciding factor. Economic considerations mean something more than the evaluation of capital and maintenance costs. For exact calculation the lifetime and failure rate would be necessary, but are usually not known.

The instrument manufacturers announce and advertise new types, but fail to mention an unsuccessful type and its withdrawal. Some instruments and control systems require special calibration, programming and maintenance equipment, which have to be reckoned into the capital costs. Efficient instrumentation can be defined as that which meets its intended purpose without oversophistication and proves to be reliable and economic in service. In instrument selection, confidence is important and is related to the goodwill of the manufacturer, but its quantitative determination is very difficult. Good experience and reliable service is of decisive importance. As a general rule we have to consider economy in a dynamic and not a static way, the latter applying only at the moment of purchase.

In several cases validation of the instrumentation and control system is required by an authority (e. g. FDA). Some manufacturers offer prevalidation of their equipment.

Finally, it must be stated that the choice of an instrument is always a compromise between the one which is the most up-to-date, reliable, accurate and serviceable and the one which is cheapest, readily available, familiar, and has the closest service facilities and the shortest delivery time.

## REFERENCES


[1.1] *Applied Instrumentation in the Process Industries* (Andrew, W. C., Williams, H. B., Zoss, L. M. eds) Vols 1–4, Gulf Publ. Co. Houston. (n. d.)

[1.2] Basta, N., H. C. Short: *Chem. Eng.* 92 (23), (1985) 86.

[1.3] Blickley, G. J.: *Control Eng.* 36 (2), (1989) 95.

[1.4] Considine, E., D. Ross: *Handbook of Industrial Instrumentation.* McGraw-Hill, New York 1964.

[1.5] Considine, D. M. (Ed.): *Process Instruments and Controls Handbook.* McGraw-Hill, New York 1985, 3rd ed.

[1.6] Cumming, J. M.: *Hydrocarbon Proc.* 64 (1), (1985) 61.
[1.7] Kriesel, W.: *Z. msr* 24 (1981) 375.
[1.8] Lipták, B. G. (Ed.): *Instrumentation in the Processing Industries.* Chilton Book Co., Philadelphia 1973.
[1.9] Lipták, B. G. (Ed.): *Instrument Engineers' Handbook, Process Measurement.* Chilton Book Co., Radnor. 1983 (rev.). *Process Control,* Chilton Book Co., Radnor 1985 (rev.).
[1.10] Lloyd, D., M. Lipow: *Reliability Management Methods and Mathematics.* Prentice-Hall, Englewood-Cliffs 1977, 2nd ed.
[1.11] Matley, J. (Ed.): Practical Process Instrumentation & Control. Vol. II. *Chem. Eng. Mag.* 1986.
[1.12] Sapita, R. F.: *Regelungstech. Prax.* 24 (9), (1982) 289.
[1.13] Unger, E., Th. Stumpf: *Costs of Reliability in Instrumentation Technology.* INTERKAMA 1977, Syrbe, M. and Will, B. (Eds), Springer, Berlin 1977, p. 495.
[1.14] Wilkinson, J.: *Measurement and Control* 20 (5), (1987) 49.
[1.15] Wolff, H. S.: *Signal Received, but not Understood.* IMM Prof. Gr. 6. Colloq. on the interpretation of biological signals. (n. d.)
[1.16] Nagy, I.: *Bevezetés a vegyipari műszerezésbe* (Introduction to Chemical Process Instrumentation). Műszaki Könyvkiadó, Budapest 1980.

CHAPTER 2

# FUNDAMENTALS OF PROCESS CONTROL

## 2.1 CONTROL OBJECTIVES

The fundamental question of process control is the proper definition of control objectives: what should be controlled, where, and by what method. The incentives are to get a safe, economic, human and environmentally friendly plant operation which uses the capacity of the equipment, to hold the process between the constrains of the technology, and to produce products in the prescribed quantity and quality. To achieve this it is necessary to suppress the influence of external disturbances thus ensuring the stability of the chemical processes.

The objectives of control may be technical and economic. Plant safety considerations, operational constraints, environmental regulations, maximal yield, throughput or profit and minimal energy consumption or expenses might all be chosen as goals. The statement of economic objectives usually means writing down the objective function. The term optimal control or process optimisation is frequently used, but it should not be forgotten that the term 'optimum' in itself is meaningless. The 'optimum' criteria have to be precisely defined. If they are properly stated, objectives can be the starting points for the synthesis of control structures. The control objective is first related to the process variable that might be controlled. The control objective of a single piece of equipment is usually to maintain its performance constant. In the case of a heat exchanger this means control of the outlet temperature of the heated fluid stream. The quality of control and the tolerances have to be specified, bearing in mind that requirements which are too closely specified are very expensive to satisfy. The static and dynamic behaviour of a system is expressed by its mathematical model. Several models are used by control engineers and others by chemical engineers. Given an adequate model, computer simulation is possible. The experimental modelling of a process is called process identification.

An important step in the formulation of control objectives is the determination of the degrees of freedom of unit operations and processes. The degrees of freedom for control have to be calculated when designing the control system. With modern computer-aided design techniques the functioning of control schemes and control loops can be simulated and the possible realisation of the objectives can be supervised.

## 2.2 DESCRIPTION OF CHEMICAL SYSTEMS

The pioneer of process dynamics, D. P. Campbell said "In process control, knowledge of process behaviour comes first" [2.2]. Characterisation of a chemical operation unit means the description by suitable equations of the material and the

energy streams flowing in it. The state of a system is defined by both the input and output variables.

In order to design and apply a process control system it is necessary to have a mathematical representation of the physical and chemical phenomena; this is called a mathematical model. The development of a mathematical model from the description of the chemical operation or process is a very synthetic activity requiring the use of all basic principles of chemical engineering. The result is usually a large set of nonlinear partial differential equations. For the mathematical model of the controlled process for analysis and design, a simple, linear, single input–single output control system, a small set of standard terms and equations being required. Controversy about the above statements is one of the main causes of misunderstanding between process engineers and control system engineers. On the other hand, this is the driving force of the enormous scientific development efforts to develop adequate methods which aim to satisfy the requirements of advanced control strategies. Chemical systems work either continuously or batchwise; the descriptions are different for the two operating modes. Verbal description and graphical presentation are used in the case of batch processes.

There are two different ways to analyse the problems involving conservation principles: the Eulerian and Lagrangian viewpoints. For deeper insight we refer the reader to the literature [2.22].

### 2.2.1 FUNDAMENTAL EQUATIONS

The fundamental equations are based on natural laws. In the first group one finds the equations of the conservation principle, the balance equations, which are the following:

— total mass balance
— component mass balance
— total energy balance
— momentum balance.

In the second group there are the transport rate equations with the following general scheme:

Flow = Transfer coefficient × Area × generalised density difference.

In the third group one finds other equations, such as:

— kinetic rate equations
— phase equilibria
— equations of state.

The chemical engineering literature deals with the Damköhler and extended Damköhler equations.

The principle of conservation of a quantity, viz. mass, states that:

$$\frac{\text{Accumulation of } M \text{ within a system}}{\text{time period}} = \frac{\text{flow of } M \text{ into the system}}{\text{time period}} - \frac{\text{flow of } M \text{ out of the system}}{\text{time period}} +$$

$$+ \frac{\text{amount of } M \text{ generated within the system}}{\text{time period}} - \frac{\text{amount of } M \text{ consumed within the system}}{\text{time period}} \tag{2–1}$$

The description of a system is based on the definition that the state of a system is the minimum set of numbers or variables (the state variables) which contain sufficient information about the past history of the system to permit us to compute all its future states — assuming of course that we know all future inputs and also the equations describing the system [2.2].

The differential equations describing operating units can be classified into two groups: ordinary and partial differential equations. The dynamic behaviour of a process and a control system may be found by solving these equations. Several methods are used, beginning with the classical solution of linear differential equations. A well-developed method is the use of the Laplace transformation, which is treated in many books and applied to chemical processes [2.18, 2.22]. If the independent variable assumes only integer values, then the system can be described by difference equations. Adequate transformation methods are available for these equations, too. The methods mentioned above were originally used by control engineers to solve problems of electrical engineering.

In chemical engineering the use of state variables and state equations is the most commonly used method of describing a chemical operating system. Chemical processes are usually multivariable systems, having many inputs and outputs. A special presentation was thus needed, and the state space method proved adequate for control system design. The state space refers to an $n$ dimensional space, having $n$ coordinates. A point in the state space represents one state of the system. The general form of the state equation is

$$\dot{\mathbf{x}}(t) = \mathbf{f}[\mathbf{x}(t), \mathbf{u}(t), t] \tag{2–2}$$

and additionally

$$\mathbf{v}(t) = \mathbf{g}[\mathbf{x}(t), \mathbf{u}(t), t], \tag{2–3}$$

where $\mathbf{x}$ is the vector of state variables;
$\mathbf{v}$ is the vector ($\mathbf{v} = \mathbf{x}_c$) of output variables;
$\mathbf{u}$ is the vector of the input variables;
$\mathbf{f}$ is a vector function;
$\mathbf{g}$ is a vector function;
$t$ is time.

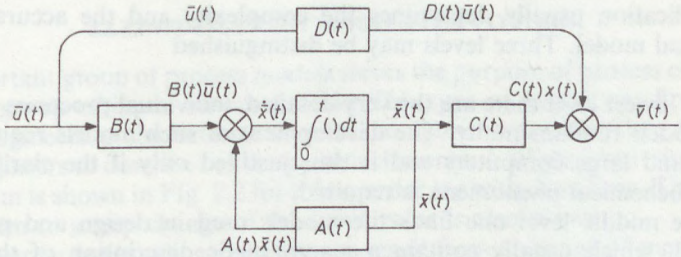


Fig. 2.1 State space equations

For a linear system with constant (time independent) coefficients, the matrix representation of the state equation is

$$\dot{\mathbf{x}} = \mathbf{Ax} + \mathbf{Bu} \tag{2–4}$$

and

$$\mathbf{v} = \mathbf{Cx} + \mathbf{Du}, \tag{2–5}$$

where **A** is the system matrix (array);
**B** is the input matrix;
**C** is the output matrix; and
**D** is an additional (subsidiary) matrix.

Several authors distinguish between the manipulated input variables and the disturbances. The solution of state space equations may be found in the literature [2.7]. A block diagram of the state space equations is shown in Fig. 2.1. For proper systems **D** usually equals 0. Chemical engineering systems are generally proper systems. This form of system description is advantageous for process control system analysis and design because it is in conformity with input–output modelling terminology.

### 2.2.2 MATHEMATICAL MODELS AND SIMULATION

The analysis of the dynamic behaviour of a chemical process requires an adequate mathematical model. There are two ways of model building, the theoretical or 'a priori' and the experimental, or 'a posteriori', the latter method usually being called identification. The model can be used to replace the real system (process) and then to explore a number of aspects of it. This means that model building depends on the purpose that the model will serve. The most important types are:

— prediction of future behaviour;
— computer simulation;
— process monitoring;
— diagnosis;
— process control system design;
— advanced process control.

The application usually determines the complexity and the accuracy of the mathematical model. Three levels may be distinguished

(*i*) on the lowest level there are the very detailed, individual processes describing the models fundamentally. The development of such models requires much work and large computers and is thus justified only if the clarification of physicochemical phenomena is required.
(*ii*) On the middle level one finds the models used in design and process operation, which usually contain a macrokinetic description of the processes. Their accuracy depends on the weight of the particular process in the whole system.
(*iii*) On the highest level are found the models required for control system synthesis and operation. These are in general reduced models which describe dynamic behaviour and interactions. These models have to contain quantitative data on the parameters of the process. Models like these are required for on-line computer control.

The mathematical model is parametric if the parameters are written in explicit form; nonparametric models contain the parameters implicitly (e.g. as weight functions or frequency response curve diagrams).

In order to discover the dynamic behaviour of a system the differential equations of the model have to be integrated. As most of the chemical processes are modelled by nonlinear differential equations there is no general mathematical theory for their analytical solution. It is known that ordinary differential equation can describe the lumped parameter systems, where time is the only independent variable; but distributed systems, where spatial variables are also involved, are described by partial differential equations. Since closed form analytical solutions are available only for linear differential equations linearisation of the model is common practice.

Numerical solution of the equations is the other possibility. Computer simulation has three alternatives

— analogue computer simulation
— digital computer simulation
— hybrid computer simulation.

With the availability of powerful, high speed and relatively low cost digital computers, digital simulation is developing fast. Simulation involves the creation of something which represents another thing and acts like it in the area of interest.

To facilitate simulation work there are sophisticated equation solving routines available and several special simulation languages have been developed. General purpose simulation languages are e.g. SIMULA, SIMSCRIPT, GPSS, ACSL, etc. Computer-related simulation software is available from the vendors, such as CSMP from IBM. Special simulation programs are available for process flowsheet calculation (flowsheeting) from several software houses.

### 2.2.3 INPUT–OUTPUT MODELS FOR CONTROL

An important group of process models serves the purpose of process control and this is the group of input–output models. This type of model was first used by electrical engineers to characterise electrical components and was then adapted by control engineers to describe control system elements. A single input–single output linear system is shown in Fig. 2.2 for a first-order lag with dead time. The response of the system to a step change of the input value is also shown.

The first-order lag in a linear system can result from a change of energy storage in one element. The mathematical model is a first-order differential equation with a single parameter, time constant $T$ (e.g. Eq. 1–11). The interval of time between initiation of an input change and the start of the resulting response is called the 'dead time'. Dead time is a delay described mathematically by the equation

$$v(t)=u(t-T_d). \tag{2–6}$$

Typically it appears in a process as the result of transportation (distance–velocity) lag, delayed availability of the measured variable (e.g. chemical analysis), etc. Time constant and dead time are the most important parameters affecting system behaviour.

In control system analysis and design the use of transfer function models is widespread. The differential equation describing the process (linear or linearised) is transformed to an algebraic equation by taking the Laplace transform of both sides. The transfer function between an input and an output is defined

$$G(s)=\frac{\text{Laplace transform of the output in deviation form}}{\text{Laplace transform of the input in deviation form}}. \tag{2–7}$$

As has already been mentioned we do not use the Laplace transform in this book and we refer to the reader the abundant literature dealing with this subject. If the variables have integer values, difference equations can be used to describe the system; consequently the mathematical model is also written in the form of difference equations. The transformation of these equations is also possible taking the '$Z$ transform' of the equation, which is beyond the scope of this book.

In the chemical industry we have to deal with multivariable processes and therefore to develop multiple input, multiple output (MIMO) process models. Figure 2.3 shows a general multivariable system. Input variables may be distinguished as independent and manipulated variables, the disturbances naturally being among the independent variables. The output variables are the measured and partly controlled variables. The inner, or state variables, which represent the actual state of the system, are not all measured directly. If the state variables coincide with

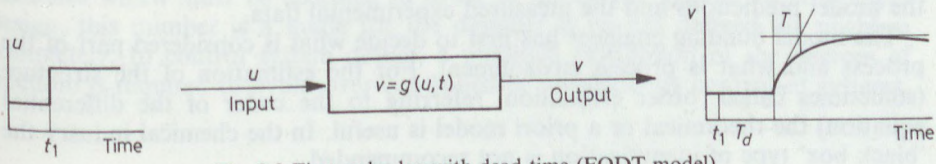


Fig. 2.2 First-order lag with dead time (FODT model)

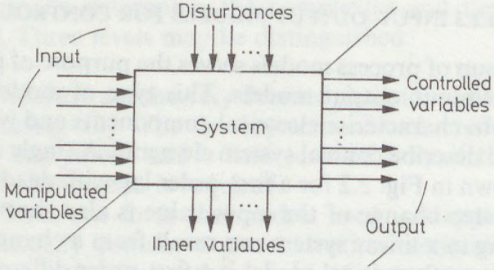


Fig. 2.3 Multivariable input–output model

the output variables of the process the development of the input–output model from the state equation is easy and straightforward. In MIMO systems the interactions also have to be considered. The importance of input–output models increased with the application of computer control and the implementation of advanced control algorithms. Adaptive control, model reference control, and predictive control all require a process model, and the design of instrumentation and automatic control needs process models, too.

### 2.2.4 PROCESS IDENTIFICATION

Creating a process model exclusively on purely theoretical grounds is extremely difficult. "Therefore any attempt to model a process a priori will have at best limited success" [2.22]. Experimental model building is usually called identification, although the terminology used in the literature is not uniform. In Figure 2.4 we can see the paths of model building, after Eykhoff [2.4]. The lower part is called in this respect 'estimation' and the whole procedure 'identification'. Scientific and practical work on this subject is enormous, the literature abundant ([2.8], [2.14]). Symposia are regulary held by IFAC on the 'Identification and System Parameter Estimation' [2.9]. Identification needs several steps, such as model structure selection, experiment design, signal check/correction, structure estimation, parameter estimation, and model validation. Model validation concerns the problem of accepting a certain model as a suitable description of the system or process for the purpose in question.

If the objective is the design of a stable controller, a fairly crude model is sufficient. On the other hand, to design a control system for optimal transition of a process from one state to another requires an accurate model of the system. The error criterion of the identification method is a measure of the discrepancy between the model predictions and the measured experimental data.

The model building engineer has first to decide what is considered part of the process and what is process environment. For the estimation of the structure (sometimes called 'order estimation' referring to the order of the differential equation) the theoretical or a priori model is useful. In the chemical indusry the 'black box' type of identification is not recommended.

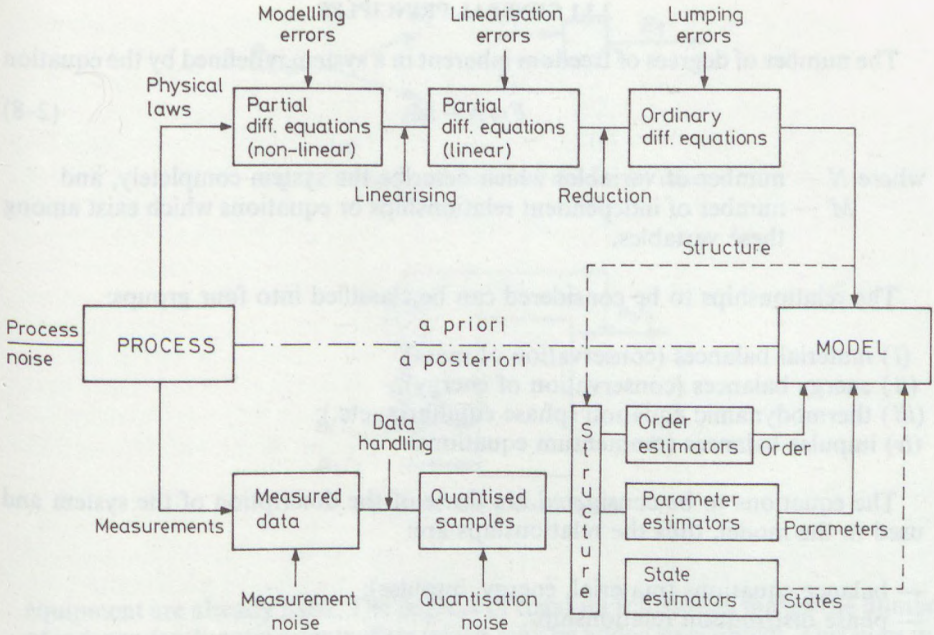


Fig. 2.4 Model building, identification scheme (Eykhoff)

Experiment design includes the choice of input signal or test signal. There are fairly standard test signals for linear systems, such as step change, ramp change, sinusoidal frequency, impulse (Dirac delta). In the process industries step change, ramp or sinusoidal inputs are not welcome for plant testing. The impulse testing and correlation methods are better suited for chemical plants. The estimation method has to be chosen according to the knowledge and experience available. The choice is very large, ranging from least squares regression to maximum likelihood and Bayes methods. Computer-aided identification methods are available for off-line identification and many advanced control algorithms use on-line identification programs.

## 2.3 DEGREES OF FREEDOM FOR CONTROL

The number of degrees of freedom of a system is the number of independent variables which must be specified in order to define the system. In equipment design, this number is a guide for the designer if he has defined his problem completely. In control system design, a modified calculation of the degrees of freedom is required to avoid over-controlled or insufficiently controlled systems.

### 2.3.1 GENERAL PRINCIPLES

The number of degrees of freedom inherent in a system is defined by the equation

$$F = N - M, \tag{2–8}$$

where $N$ — number of variables which describe the system completely, and
$M$ — number of independent relationships or equations which exist among these variables.

The relationships to be considered can be classified into four groups:

(*i*) material balances (conservation of mass);
(*ii*) energy balances (conservation of energy);
(*iii*) thermodynamic equation (phase equilibria, etc.);
(*iv*) impulse balances (momentum equations).

The equations to be considered are those of the description of the system and used in the model, thus the relationships are:

— balance equations (material, energy, impulse);
— phase distribution relationships;
— inherent restrictions and relationships.

Calculation of degrees of freedom gets very complex if chemical reactions have to be involved, therefore we do not consider kinetic rate, reaction equilibria and electric charge conservation relationships in this chapter. All relationships, which mean restrictions, are self explanatory except the last one which means that the shape of the equipment might engender some constraints. A common example is the case of tube bundle heat exchangers, where inflows and outflows on one side are identical because there is commonly no flow through the pipe walls. Similarly, when a stream is split into two streams, the latter must have identical intensive properties. Thus inherent restrictions state that a stream cannot be split into two parts with different composition or temperature. The phase rule of Gibbs is the best known degrees of freedom calculation method in chemical engineering.

Methods for the determination of degrees of freedom have been published by several authors. A very comprehensive analysis was published by Kwauk [2.13] whose method is of the 'build up' type. The present author has developed a 'circumferential'-type method. The use of degrees of freedom for control has been investigated as well [6.15]. Földes and Nagy [2.5] analysed the role of phase boundaries in the calculation of degrees of freedom for control.

### 2.3.2 ELEMENTARY CALCULATION METHODS

The purpose of the calculation should be specified first, and after that we can select an appropriate method. The geometrical degrees of freedom have to be considered for equipment design, but for control purposes the dimensions of the

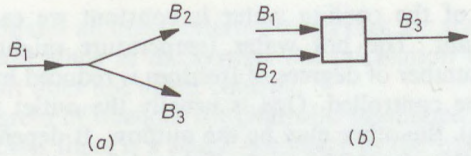


Fig. 2.5 Divider and mixer. (*a*) divider; (*b*) mixer

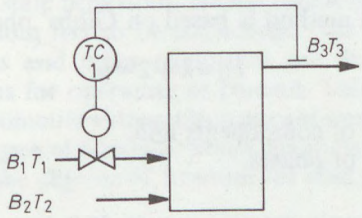


Fig. 2.6 Warm water mixer

equipment are already fixed. The degrees of freedom for control means the number of independently acting controllers which may be added to a system. This does not imply that all degrees of freedom for control must be removed by controllers. A general rule, which makes calculation easier, is that of addition or superposition. This means that it is possible to specify a set of variables and the related equations to calculate specific degrees of freedom. If required, two or more of these can be added in consideration of the connecting relationships. Similarly a complex system can be built up from simple units.

Let us first calculate the degrees of freedom for flow. This can be done regardless of the temperature or composition of the fluids. The system should be in a steady state and in equilibrium. A simple example is shown in Fig. 2.5 where a divider and a mixer appear. With single phase streams

number of variables $N=3$,
number of equations $M=1$ (material balance).

Degrees of freedom $F=N-M=3-1=2$.
This means that we can arbitrarily choose the values of two flows but the third is determined by the material balance equation. In this case the number of degrees of freedom for control is the same, and accordingly we may install two flow controllers or one flow and one ratio controller.

The warm water vessel of Fig. 2.6 is a little more complicated, because we have to include the heat content (enthalpy) of the streams.

number of variables $N=6$,
number of equations $M=2$ (material and heat balances)
degrees of freedom $F=4$.

If the temperature of the cooling water is constant we can write an identity equation $T_2$=constant. The hot water temperature might be constant, too, $T_1$=constant. The number of degrees of freedom is reduced by 2. This means that two variables can be controlled. One is usually the outlet temperature (this is indicated in Fig. 2.6), the other may be the outflow. It depends on the operating conditions whether this should be controlled or left free to change according to demand. The example shows that it is not necessary to install a controller for each free variable. There are usually some variables which cannot be controlled and have to be allowed to vary.

A general calculation method is based on Gibbs' phase rule:

$$F_G = k + 2 - \varphi, \tag{2–9}$$

where $k$ — the number of components and
$\varphi$ — the number of phases.

This is true for each stream entering a unit. If it has one phase, $k+1$ intensive variables describe the stream and one extensive variable, the flowrate. A homogeneous stream is completely described by $k+2$ variables. The total number of variables in a system is the sum of inflow, outflow and independent energy and momentum flow variables:

$$N = \varphi_i(k+2) + \varphi_0(k+2) + E. \tag{2–10}$$

Taking the example of the mixer

$N = 3(k+2)$
$M = k+2$ because there are
$k-1$ component balances;
1 total material balance;
1 energy balance;
1 momentum balance.

The degrees of freedom

$$F = N - M = 2(k+2)$$

and in the case $k=1$, $F=6$.

In the case of phases which are not homogeneous the number of identity relationships has to be reduced. These indentities can be written for pressure and temperature of phases flowing in one stream. Similarly, mechanically split streams have the same intensive variables.

### 2.3.3 CALCULATION OF THE DEGREES OF FREEDOM

There are two methods for the calculation of the degrees of freedom of a complex chemical system; the build up and the roundabout method. The build up method calculates the degrees of freedom of unit elements and adds their degrees of freedom, subtracting the identities of the interfaces. The roundabout or circum-

ferential method calculates all flows entering or leaving the system boundary. If a chemical reaction takes place in the system, the calculation becomes very complicated, but the result does not affect control.

The number of degrees of freedom for control is calculated in the same way as already presented, unless there is a phase boundary in the system. If a free liquid level is included, an extra degree of freedom for control has to be added. In designing control schemes it is common practice to install level controllers which do not count towards the number calculated for the degrees of freedom. Howard [2.24] considered unsteady state behaviour. He has found that a special case of the geometric degrees of freedom has to be considered. The dimensions of storage tanks, distillation columns and other equipment are fixed, and therefore not involved in the calculations for operating or control. This is true except for the liquid levels, which have geometric values which are not steady. Consequently each level means a geometric degree of freedom, which has to be added to the operating number, and thus we get the degrees of freedom for control.

$$F_c = N - M + H = F + H. \tag{2–11}$$

If the liquid level has to be maintained at a constant value, an additional controller has to be installed. In the case of two phase boundaries i.e. levels, e.g. water vapour distillation, two level controllers are used, one for water and one for hydrocarbon [6.15].

Finally it has to be mentioned that the disturbances remove as many degrees of freedom as the number of disturbances. The control objectives remove as many degrees of freedoms as the number of control objectives (controlled variables). At the end of the designing phase of a control system all degrees of freedom have to be removed.

## 2.4 FUNDAMENTALS OF CONTROL THEORY

Control theory, even linear control theory is a study in itself and many excellent books are available on this subject. In this chapter we mention only three topics of general interest which are, in the author's opinion, important for an understanding of the following parts.

The first is the theoreticel controllability of a system, the second is the quality of control and the third is an aid to the development of control schemes for process units which is the most important aim of the book. Elementary knowledge of control theory, feedback, feedforward, proportional, integral and derivative control is supposed to be already known by the reader. Advanced control algorithms will be later presented to the extent required for the understanding of control schemes.

### 2.4.1 CONTROLLABILITY AND OBSERVABILITY

Among the most important concepts are the theories of controllability and observability. The works of Kalman [2.11] should be consulted for a detailed analysis, but we shall present here a brief summary of the results. A system is said to be completely controllable if any state of the system can be reached from any

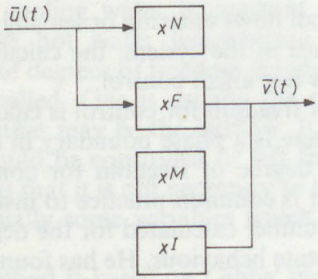


Fig. 2.7 System decomposition

initial state within a finite time interval by the use of some control action. The term 'completely state–controllable system' is also used. A system is said to be observable if measurements of the output variables contain sufficient information to allow complete identification of the state of the system. Controllability and observability are both necessary for control, and are of a complementary nature. The mathematical theory of controllability was developed by Kalman. The equation of state of a general system can be transformed in the canonical form which is called the Kalman-type canonical form.

A composite system can be divided into four parts or subsystems (shown in Fig. 2.7) whose properties are as follows:

1. completely controllable but not observable *(N)*,
2. completely controllable and observable *(F)*,
3. uncontrollable and unobservable *(M)*,
4. uncontrollable but observable *(I)*.

A necessary and sufficient condition, presented and proved by Kalman, is that if a system is completely observable and completely controllable, then it is of minimum dimension; this is called the minimum realisation.

### 2.4.2 QUALITY OF CONTROL, STABILITY

The performance criteria of controllers or control systems are important first to specify the requirements of a control system, and second to establish a basis for the comparison of different control schemes. Tuning of the controllers is performed to satisfy prescribed performance criteria. One of the simplest methods is to define the static and dynamic error of control.

In Fig. 2.8 a typical time response of a controlled variable is seen, together with the error limits. The time interval between the step change of an input and the instant when the resulting variation of the controlled variable (output) does not deviate by more than a specified tolerance from its final steady-state value, is called the settling time. The maximum value of the transient deviation should not exceed the dynamic error limit.

More advanced quality criteria are the integral criteria, which are functions of the general form

$$I=\int_0^\infty F(x[t],t)\,\mathrm{d}t=\text{minimum}\,. \tag{2–12}$$

Many equations of this type can be defined, beginning with the simplest

$$I=\int_0^\infty |x(\infty)-x(t)|\,\mathrm{d}t=\text{minimum}\,. \tag{2–13}$$

In practical applications three equations are employed:

— the absolute value of area method, wherein the absolute values of the areas between the controlled value and the set point value line are calculated (see above equation) (IAE);

— the squared area method, which calculates the squares of deviations and integrates over time (ISE);

— the integral of time multiplied absolute error (ITAE) criterion, which is calculated from the following equation

$$I=\int_0^\infty |x(\infty)-x(t)|\,t^n\,\mathrm{d}t\,. \tag{2–14}$$

Long lasting oscillations are caught by this method. The weighting of elapsed time can be altered by choosing the value of the exponent $n$.

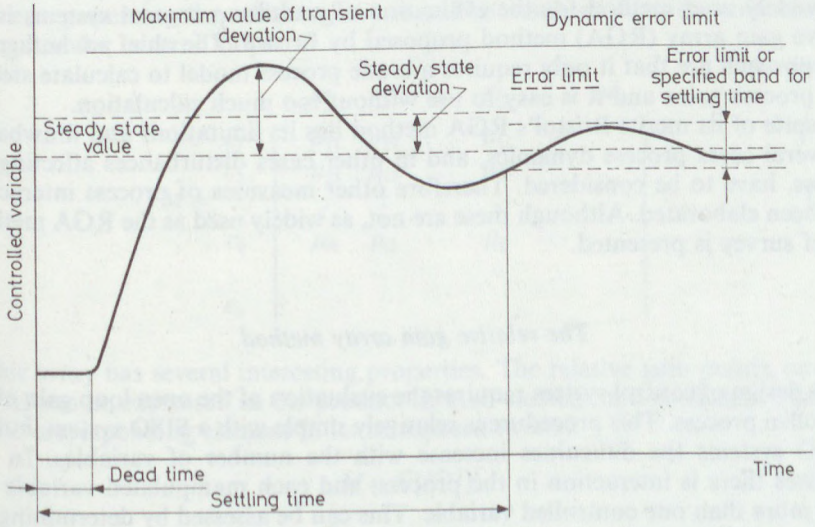


Fig. 2.8 Time response of a system

A very simple, but not always satisfactory, criterion is the decay ratio, which is the ratio of the amplitudes of two sequential deviations. Its required value is usually taken as 1/4. A natural demand of the operator is the achievement of optimal control. It must not be forgotten that 'optimal' in itself has no definite meaning, one has first to define under what circumstances the behaviour should be optimal, and what is the optimum criterion.

Stability is a 'sine qua non' requirement of a control system. The numerous and sophisticated stability criteria and their application lies in the field of control engineering and requires the use of higher mathematics. A controlled system is considered stable if for every bounded input it produces a bounded output regardless of its initial state.

It has to be mentioned that the application of sensing devices, controllers and final control elements changes the dynamic characteristics and thus the stability of the uncontrolled process. A nonoscillatory process may acquire oscillatory behaviour with control. Dead time is a main source of closed loop instability.

### 2.4.3 MULTILOOP CONTROL SYSTEM ANALYSIS

The designer of control systems using several single loop controllers is confronted by the problems of loop pairing, interaction among the loops, the nature of the disturbances affecting the system and the determination of the structure of the control system. Advanced control theory has highly elaborated methods, but for practical use the short cut methods are of importance because the time and cost factors of the sophisticated methods are prohibitive at the design stage. In some cases experience with the control of similar units can be used, but there is a need for a method for the selection from a number of possible control schemes when only a limited amount of information is available.

A widely used method for the evaluation of multiloop control systems is the relative gain array (RGA) method proposed by Bristol. The chief advantages of this approach are that it only requires a crude process model to calculate steady-state process gains and it is easy to use without too much calculation.

In spite of its merits Bristol's RGA method has its limitations and drawbacks. In several cases process dynamics, and in other cases disturbances affecting the process, have to be considered. Therefore other measures of process interaction have been elaborated. Although these are not, as widely used as the RGA method, a brief survey is presented.

#### *The relative gain array method*

The design of control system requires the evaluation of the open loop gain of the controlled process. This procedure is relatively simple with a SISO system, but for MIMO systems the difficulties increase with the number of variables. In real processes there is interaction in the process, and each manipulated variable will affect more than one controlled variable. This can be assessed by determining the open loop process gains one by one, with all manipulating variables held constant

except one, and the measuring effect on one controlled variable

$$A_{ij} = \frac{\partial c_i}{\partial m_j}. \tag{2–15}$$

In a multivariable process the objective is to connect a manipulated variable to that controlled variable which will show the greatest influence on it. The designer of the control system needs a measure of performance to eliminate guesswork. Bristol [2.1] has defined a useful array for a measure of the interaction in the steady state for a given multivariable system. This array also provides guidance for the purpose of designing the controller structure.

Relative gain is the ratio of the open loop gain in terms of the manipulated variable $m$ (i.e. all other $m$ variables are constant) to the closed loop gain in terms of the controlled variable $c$ (i.e. all other $c$ variables are constant). The term $\mu_{ij}$ designates the dimensionless change in $c_i$ with respect to a change in $m_j$, viz.

$$\mu_{ij} = \frac{\dfrac{\partial c_i}{\partial m_j} \quad m \text{ const} \quad k \neq j}{\dfrac{\partial c_i}{\partial m_j} \quad c \text{ const} \quad k \neq i} \tag{2–16}$$

and these terms are the elements of Bristol's array. Relative gain is a measure of the influence a selected input (manipulated) variable has over a particular output (controlled) variable, relative to that of other input variables acting on the process. The evaluation is done first with all other loops open and then repeated with all other loops closed (i.e. under perfect control).

When analysing a control system, it is useful to arrange the calculated values in a table, representing the relative gain array. The numbers show the combinations best suited for control loops.

$$M = \begin{array}{c|cccccc|} & m_1 & m_2 & \dots & m_j & \dots & m_n \\ c_1 & \mu_{11} & \mu_{12} & \dots & \mu_{1j} & \dots & \\ c_2 & \mu_{21} & \mu_{22} & \dots & \mu_{2j} & \dots & \\ \vdots & \vdots & \vdots & & \vdots & & \\ c_i & \mu_{i1} & \mu_{i2} & \dots & \mu_{ij} & \dots & \\ \cdot & \cdot & \cdot & & \cdot & & \\ c_n & & & & & & \end{array}. \tag{2–17}$$

This array has several interesting properties. The relative gain matrix or array (RGA) can be expressed as the product of each element in a coefficient matrix $K$ by the corresponding element in its transposed inverse

$$M = K[K^{-1}]^T. \tag{2–18}$$

The details can be found in Refs [2.21], [2.22].

We can appreciate the value of this relative gain method if we consider that the number of possible control configurations for $n$ input and output variables is $n!$, which means 120 variations for an evaporator plant with 5 variables. It is a valuable tool in evaluating the control schemes presented in Part II of this book.

A useful property of the RGA is that the sum of the elements in each row and each column is equal to one. This means, for example, that in a $3 \times 3$ array four relative gains must be evaluated, the others being filled in by difference. The numerical value of the relative gain $\mu_{ij}$ is a measure of controllability and interaction. If $\mu_{ij}$ is zero, or close to zero, then $m_j$ has little effect on $c_i$. On the other hand, if $\mu_{ij}$ is large, then the interaction is significant. If a particular open loop gain does not change with all other loops being first open and then closed, its relative gain would be unity, meaning that it will not interact with the other loops. In the RGA method the recommended controller pairing is the one corresponding to the relative gains which have the largest positive values. A relative gain is a dimensionless number since it is a parameter divided by itself. It is therefore insensitive to scales and ranges. Relative gain is insensitive to nonlinearities as presumably the same nonlinearity appears in both numerator and denominator.

### *Different evaluation methods and decoupling*

The constraints and shortcomings of Bristol's RGA method initiated the development of other short-cut methods for the assessment of process control design. A steady-state operability index the Relative Disturbance Gain (RDG) has been introduced. The RDG is similar to the RGA in that it is a dimensionless, scale-independent index which does not depend on controller design. One of the most important uses of the RDG is to decide whether interaction resulting from a disturbance is favourable or unfavourable. In addition Marino-Gallaraga *et al.* [2.16] defined a dinamic RDG. The RDG used in conjunction with RGA provides valuable information about the dynamic behaviour of classical multiloop control systems.

Another interaction measure based on open loop step responses is the Relative Dynamic Array (RDA). The RDA provides the same type of normalisation as the RGA since the sum of the elements in each row and each column is unity. Consequently the recommended controller pairing is determined in the same manner, namely the pairing which corresponds to large positive elements in the RDA is selected.

The estimation of the induced interaction effects is possible by using an interaction index matrix. This is a relative measure of the interaction gains. Any variable pair for which the interaction index is greater than one is an unacceptable loop pairing and would be rejected.

If there is serious coupling between the loops of a multiloop system, then decoupling the variables is needed. Decoupling control systems can be designed with the aid of the process model. Theoretically, total decoupling can be achieved with the reverse model of the process; in practical decoupling control devices 'decouplers' are used in the most important loops. Several examples of decoupling for distillation column control have been published [2.17].

## 2.5 UNIT CONTROL SCHEMES

The expression 'unit operation' is a familiar one to chemical engineers. It has its origin from the recognition that chemical processes can be built up from a limited number of simple operations. Control systems can be broken down into typical parts, and in the following we call these *unit control schemes*. Control systems of complex chemical processes can be built up from these units. Control theory deals with these schemes, too, but usually not in a form which is easily applicable to chemical processes. A detailed analysis of the unit control schemes can be found in several books [2.18]. The control schemes developed in Part II are built up using the unit control circuits. Although these were developed before computer control came to the fore, they are also valuable aids in designing computer control systems. Advanced direct digital control (DDC) systems have modular software, called idioms or idiomatic control structures, which is structured to apply unit control schemes.

### 2.5.1 SET POINT CONTROL

This is the basic feedback control system; the one which is most used and best known. The scheme is shown in Fig. 2.9, where the ANSI standard expressions are represented. The term 'set point' is replaced by the term 'reference input signal'. It

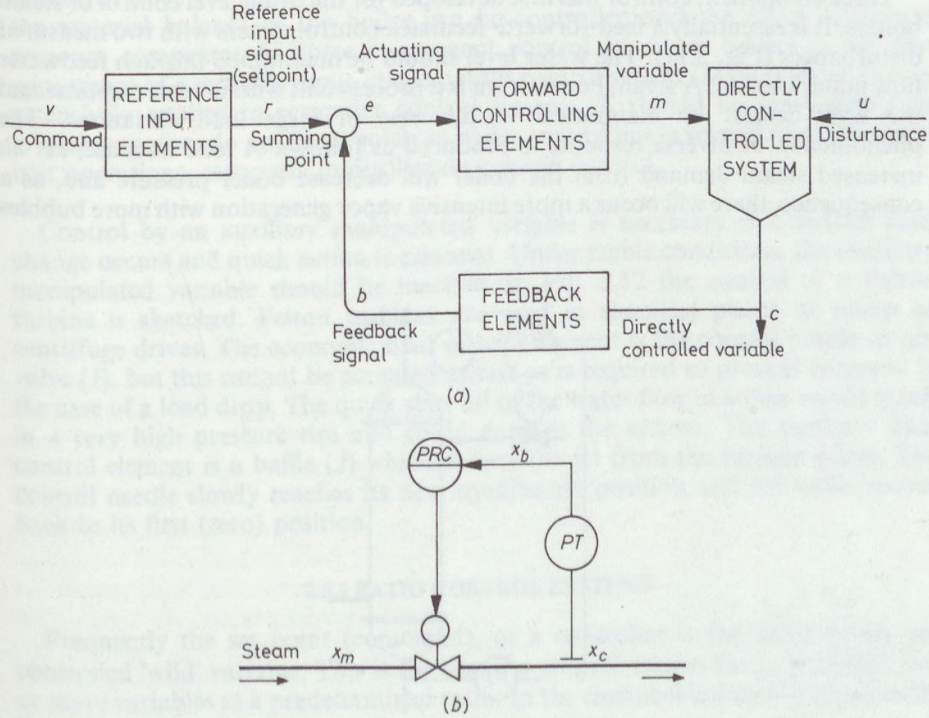


Fig. 2.9 Feedback control system. (*a*) block diagram; (*b*) steam flow control

is called a *command* if it is expressed in the same units as the controlled variable. This is an automatic feedback control system which operates to achieve prescribed relationships between selected system variables by comparing functions of these variables and using the difference to effect control (see ANSI MC 85).

### 2.5.2 INTRODUCING AUXILIARY INPUT VARIABLES

Auxiliary controlled variables are used if one controlled variable is not sufficient for efficient control. An example is the temperature control of large rooms where one temperature sensor is not able to detect room temperature, and therefore a second or a third sensor has to be installed.

Feed-forward control, or compensation of disturbances, is intended to improve the performance of the control system. If simple set point control is not satisfactory and the main disturbance signal can be measured, it is possible to compensate its effect. In Fig. 2.10 it is assumed that the decisive disturbance is flowrate variation. A flow transmitter is installed and its signal is connected through a compensating element to the temperature controller. In this way the controller 'knows in advance' the coming change of temperature and can actuate the final control element before a temperature difference is sensed. The connection of the feed-forward signal can act on the measured value or on the manipulated value.

Three component control was first developed for the drum level control of steam boilers. It is essentially a feed-forward–feedback control system with two measured disturbances (Fig. 2.11). The water level should be maintained through feedwater flow manipulation. A steam boiler drum is a process unit with inverse response and the level cannot be maintained in the case of large load variations. The phenomenon of inverse response is produced as follows. A load increase, i.e. an increased steam demand from the boiler will decrease boiler pressure and, as a consequence, there will occur a more intensive vapor generation with more bubbles

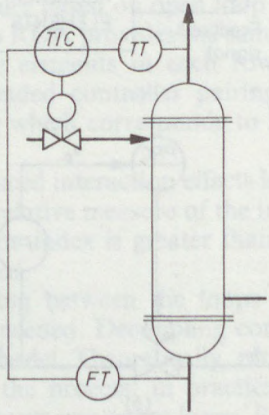


Fig. 2.10 Feed-forward and feedback control

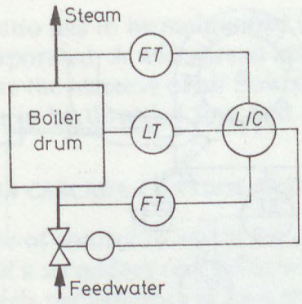

Fig. 2.11 Three component control

and initially with expanding bubbles. This will raise the liquid level in the boiler instead of depressing it as could be expected on the basis of the mass balance. The level controller which senses the rise in the liquid level will close the feedwater valve in the first moments of load increase, instead of opening it. After reaching a new equilibrium at a lower level and higher feed than at the beginning of the disturbance a new inverse response occurs. The increased cold feedwater input will decrease vapor generation; with fewer bubbles the level will decrease in the boiler and the level controller will act in the reverse sense again; i.e. it opens the valve instead of closing it. With two auxiliary variables, feedwater flow and steam flow, the material balance of the boiler can be controlled and the effect of inverse response compensated. Three component control of steam boilers is the first appearence of a multiple input–single output control system (MISO) which is very extensively applied in computer control systems. It should be mentioned that inverse responses do not occur solely in boiler control but in several other chemical unit operations, especially in distillation column control.

Control by an auxiliary manipulated variable is necessary if a sudden load change occurs and quick action is essential. Under stable conditions, the auxiliary manipulated variable should be inactive. In Fig. 2.12 the control of a Pelton turbine is sketched. Pelton turbines are used in chemical plants as pump or centrifuge drives. The economic final control element is the control needle or pin valve (*1*), but this cannot be actuated as fast as is required to prevent runaway in the case of a load drop. The quick shut off of the water flow in a pipe would result in a very high pressure rise and could damage the system. The auxiliary final control element is a baffle (*2*) which diverts the jet from the turbine wheel. The control needle slowly reaches its new equilibrium position and the baffle moves back to its first (zero) position.

### 2.5.3 RATIO CONTROL SYSTEMS

Frequently the set point (command), of a controller is the value of an uncontrolled 'wild' variable. This is the case if a control system has to maintain two or more variables at a predetermined ratio. In the chemical industry this is usually the ratio of material flows.

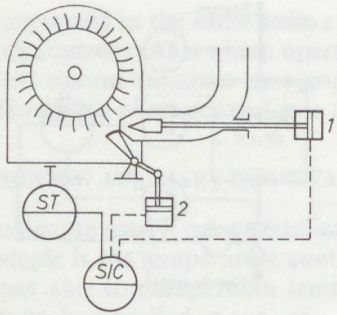


Fig. 2.12 Auxiliary manipulated variable. *1* control needle; *2* control knife (baffle)

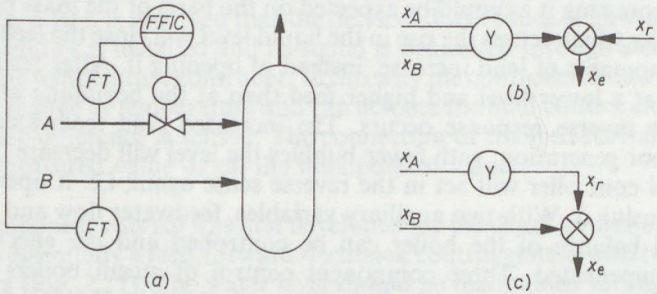


Fig. 2.13 Flow ratio control. (*a*) basic scheme; (*b*) computing relay in the loop; (*c*) computing relay outside the loop

Simple ratio control is shown in Fig. 2.13, where the flowrate of material *A* (e.g. hydrochloric acid) should always be a certain proportion of the free flowing material *B* (e.g. acetylene) fed into a reactor. Control circuits can be constructed in two ways. The first system consists of a ratio element whose inputs are the signals of the flow transmitters and whose output is fed to the controller (Fig. 2.13*b*). In the second case there is a multiplying element receiving the signal of one flow transmitter, and its output adjusts the set point of a flow controller acting on the other flow (Fig. 2.13*c*). This has the advantage that the computing element is outside the control loop and it does not affect loop gain.

Fractional ratio control is recommended if one stream has unfavorable properties and flow measurement is inconvenient. The scheme is a variation of the simple ratio control, in that the total flow is measured as an uncontrolled variable and the controller manipulates one stream to maintain a predetermined fraction of the total flow. There could be several reasons for using this scheme (e.g. high viscosity or extremely corrosive nature of one fluid). The property of the mixture is suitable for standard flow measurement (Fig. 2.14). Ratio control is not limited to two streams; with one controller for each additional stream, multi-component mixing

is possible. If the correct ratio has to be maintained for safety reasons, additional selector relays can be incorporated. A widespread application of this is in fuel–air ratio control systems, where the increase of air flow should occur first. With lower heat demand gas flow has to be throttled first and air flow afterwards (see Fig. 5.12).

### 2.5.4 CASCADE CONTROL SYSTEMS

Cascade control is a type of control in which the output of a main controller is the reference input signal of a secondary controller which actuates the final control element. In cases where high performance is mandatory or the process has large time constants and frequent disturbances, cascade control is of great value.

Simple cascade control systems consist of two sensors, two controllers and one final control element. If the controlled process can be resolved into two parts an intermediate variable can be used as input to the secondary controller. This secondary or inner control loop is a fast one. The larger time constant is in the master or primary control loop. On the block diagram of Fig. 2.15*b* it can be seen

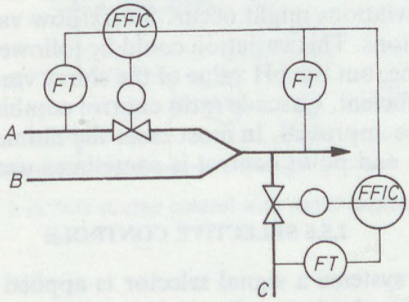


Fig. 2.14 Fractional ratio control

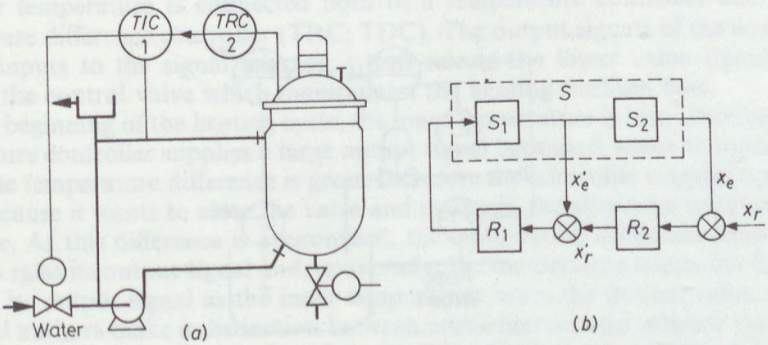


Fig. 2.15 Cascade control system. (*a*) control scheme; (*b*) block diagram

that the master loop has more elements. For example, a jacketed stirred vessel with temperature control is shown in Fig. 2.15*a*. The inner temperature should be maintained constant. The heat transmitting fluid is circulated to attain a large heat transfer coefficient. The time constant is large because of the heat capacities of the liquid in the vessel, the material of the vessel itself, the heat transmitting fluid, and the heat resistance of the wall of the vessel. To improve control performance, the temperature of the heat transmitting fluid is measured and used as the controlled variable of the secondary (slave) loop. This has a fast response, and manipulates the heat transmitting fluid flow. Accurate temperature in the vessel is maintained by the primary (master) temperature controller.

Cascade Ratio or End Point Control is the combination of ratio control with the cascade idea. In chemical processes, especially in waste treatment plants, it is common practice to mix two or more streams whose flowrate and composition both vary with time. To obtain the desired effluent neither simple ratio control (because of the composition variability) nor simple quality control (because of the large dead time of composition measurement) is sufficient. The problem can be solved, as Fig. 2.16 illustrates, by cascade ratio control. The acidic waste water flowing into the neutralising tank has to be mixed with a lime solution. Quality control with a pH controller is required but the time constant of the process is large, so unwanted deviations might occur. Slurry flow varies irregularly, according to the plant conditions. This variation could be followed with a ratio controller on the lime solution line, but the pH value of the slurry varies too, therefore simple ratio control is not sufficient. Cascade ratio control combines these functions, and the performance can be improved. In most cases the ultimately controlled variable is quality, so the term end point control is sometimes used.

### 2.5.5 SELECTIVE CONTROLS

In selective control systems a signal selector is applied to give priority to one control objective. A signal selector discriminates between input signals, it passes the smallest one if it is a low selector or the largest, if it is a high selector. A control system with signal selector is shown in Fig. 2.17, where temperature control of a

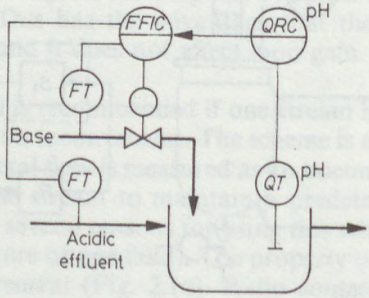


Fig. 2.16 Cascade-ratio control system

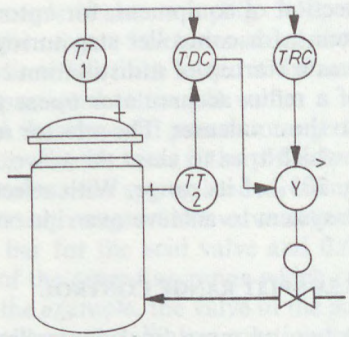


Fig. 2.17 Selective control

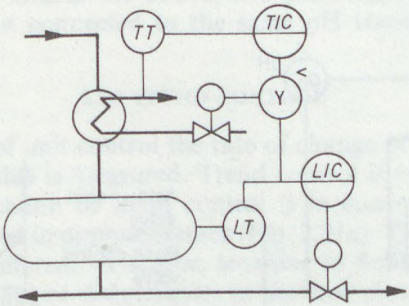


Fig. 2.18 Safe startup control with signal selector

glass-lined vessel has to prevent too large a temperature difference between heating medium and vessel content.

The output signal of the temperature transmitter (TT–1) which is a measure of the inner temperature is connected both to a temperature controller and to a temperature difference controller (TRC; TDC). The output signals of the controllers are inputs to the signal selector, which selects the lower value signal and actuates the control valve which manipulates the heating medium flow.

At the beginning of the heating cycle, the inner temperature is low, therefore the temperature controller supplies a large output signal because it wants to open that valve. The temperature difference is great, therefore the controller supplies a small signal because it wants to close the valve and maintain the allowable temperature difference. As this difference is approached, the temperature difference controller begins to raise its output signal and, conversely, the temperature controller begins lowering its output signal as the inner temperature nears the desired value.

Several authors make a distinction between auctioneering and selector systems; in the former the selector relay is placed before the controller [2.21]. Selective

control is used for the protection of equipment, for automatic startup and shutdown, in safety control systems, for controller structuring, etc.

An example showing the safe startup of a distillation column is drawn in Fig. 2.18. The level controller of a reflux accumulator opens the control valve in the cooling water pipe leading to the condenser. The selector relay blocks the signal of the temperature controller, which tries to close the valve, until the liquid reaches a prescribed level value, e.g. 20% of its range. With selector relays, it is possible to build a hierarchical logic system to achieve override control.

### 2.5.6 SPLIT RANGE CONTROL

It frequently occurs that two or more final controlling elements have to be actuated by one controller. This happens in room atmosphere control, when heating or cooling of the air to the same temperature is needed, or in treating waste water where neutralisation of acidic and basic wastes is required with one pH

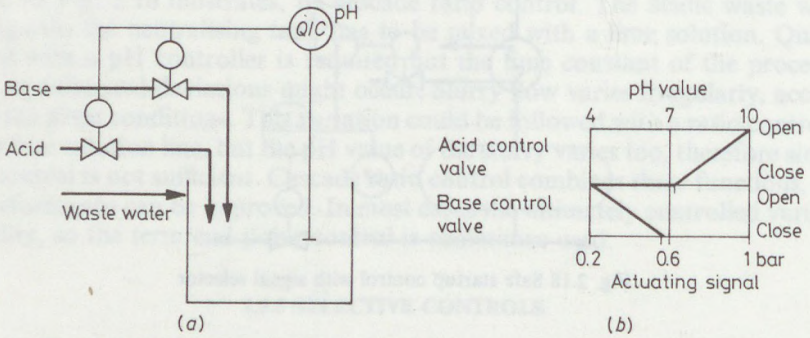


Fig. 2.19 Split range control. (*a*) control scheme; (*b*) valve operation diagram

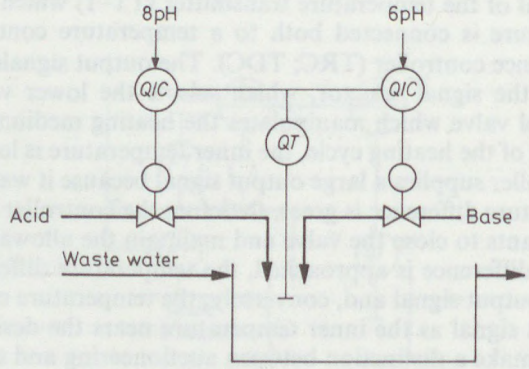


Fig. 2.20 Split reference control signal system

controller. The latter example is shown in Fig. 2.19, where a pneumatic control system is illustrated. Acidic reagent has to be added if the waste is alkaline and an alkaline reagent, usually lime, has to be added if the waste is acidic. The output of the pH controller is proportional to the pH value.

For pneumatic control the standard pressure range is 0.2–1 bar (3–15 psi). Let the output of the pH controller be 1 bar if the pH value is 4 and 0.2 bar if it is 10. The final controlling elements are spring-loaded, membrane-actuated pneumatic control valves. The operating range of the valve actuators has to be divided into two parts, e.g. 0.2–0.55 bar for the acid valve and 0.65–1.0 bar for the alkaline valve. It is this division of the operating range which causes this type to be called a split range control. In the example, the valve in the acidic solution line opens on a pressure rise, and the valve in the alkaline solution line closes on a pressure rise. In the middle of the range there is a dead zone to avoid oscillation and reagent waste.

A special case of split range control is the split reference value range (set point) control. For a similar task to the above, two pH controllers can be used with different set points, but connected to the same pH transmitter. The scheme is shown in Fig. 2.20.

### 2.5.7 TREND CONTROL

In this special type of unit control the rate of change of deviation or the trend of the controlled variable is measured. Trend control is ineffective in the steady state. A typical application of trend control is in conveyor dryers. Two thermocouples are connected in opposite senses (Fig. 2.21*a*). The time constants of the protecting tubes are different. A sensor, sensitive to flowrate change, is used to detect rapid flow changes or disturbances in the feed pipe of the furnace in Fig. 2.21*b*. The control objective is a uniform outlet temperature. The controller is sensitive to change of flow rate or temperature. If the feed stream remains steady, it works like a standard temperature controller.

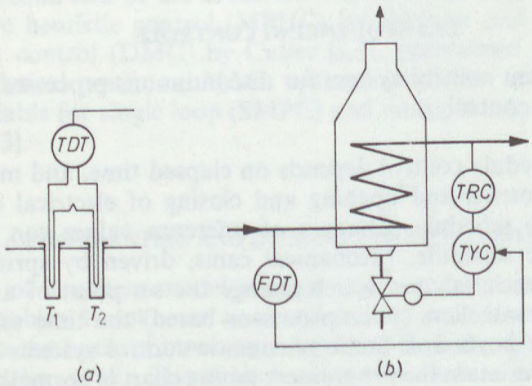


Fig. 2.21 Trend control systems. (*a*) temperature trend sensor; (*b*) trend control of a furnace heater

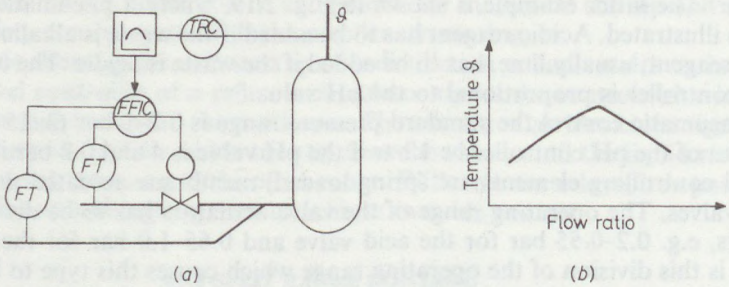


Fig. 2.22 Extremity control system. (*a*) control scheme; (*b*) temperature vs. flow ratio diagram

### 2.5.8 EXTREMITY CONTROLS

With increasing energy and material costs, optimal control is gaining importance. One relatively simple control method is to find the extreme value of a function. If the change of the value of the controlled variable as a function of the manipulated variable(s) has a maximum or minimum, extremity control can be used to find its value.

An example is shown in Fig. 2.22, where the maximum temperature of a chemical reactor is controlled by manipulating the ratio of the reagents. The controller uses a peak searching technique. The manipulated variable is changed in steps and the result is evaluated. If the derivative of the curve changes, this means that the extreme point has been reached. The rise of flow ratio results in a temperature rise until the maximum is reached, after which it begins to fall. Changing composition of reagents, raw materials, and aging catalyst activity may change the position of the maximum temperature. Searching methods use either uniform steps or a combination of deviation-dependent steps and speeds.

Extremity controllers have only been constructed for a few variables; computer controls with optimising programs are used for multivariable systems.

### 2.5.9 SEQUENCING CONTROLS

The most important control system for discontinuous processes and for batch systems is sequence control.

Time cycle or schedule control depends on elapsed time, and manipulation of final controlling elements and opening and closing of electrical circuits occurs according to a time schedule. Changes of reference values can also be made according to a time schedule. Mechanical cams, driven by springs or electric motors, can have special shapes which change the set point of a controller. In modern electronic controllers (microprocessor based) the time schedule can be programmed via the keyboard. Some pneumatic control systems have punched tapes or cards which contain the program. A timing chart is normally used to show the position of various elements of the system.

Programmable controllers are not bound to a time schedule but to other events than elapsed time. After the completion of one program in a sequence of steps, the next one is initiated by the sequence controller. Many sequence controllers are used in the rubber tyre industry, and one control system is illustrated in Fig. 8.4. Old systems used electromechanical devices, relays and pneumatic logic. Modern programmable logic controllers (PLC) or microcomputers are able to function as sequence controllers (see Chapter 9).

## 2.6 ADVANCED CONTROL METHODS

Advanced methods of control require more information than conventional control methods and can achieve the optimum control of a process. A mathematical model of the controlled system and additional sensors are usually required to obtain the extra information needed for advanced control. With the use of microprocessors and control computers the industrial application of advanced control methods has gained increasing acceptance which justifies the inclusion of a general description of these methods. There is a vast number of publications on advanced control methods, several books are available, too [2.12]. Because many of the published methods are similar but bear different names the classification usually adopted is not a theoretically well-founded, strict one and is influenced by the history of the developments in this area.

### 2.6.1 PREDICTIVE CONTROL

Processes with large dead time or extremely large response time are difficult to control and predictive control methods have been developed to overcome this difficulty. The first well-known system was the Smith predictor, which uses a simple process model without dead time and a dead time element. Another internal model control method for a first-order plus dead-time process is known as Dahlin's algorithm.

Model predictive control is the most important development in chemical process control in the second half of the 1980s. Several methods were published, such as model predictive heuristic control (MPHC) by Richelet and co-workers [2.19], dynamic matrix control (DMC) by Cutler [2.3], generalised predictive control, generalised analytical predictor, MAC, optimal predictive control, etc. Control software is available for single loop (SMPC) and multiple loop (IDCOM) predictive control [2.23].

### 2.6.2 INFERENTIAL AND INTERNAL MODEL CONTROL

With the aid of a system model it is possible to design control systems for unmeasured variables. If unknown state variables of an industrial process have to be controlled on the basis of measured variables, then the application of a state observer may be the answer. The state observer contains a mathematical model of the process.

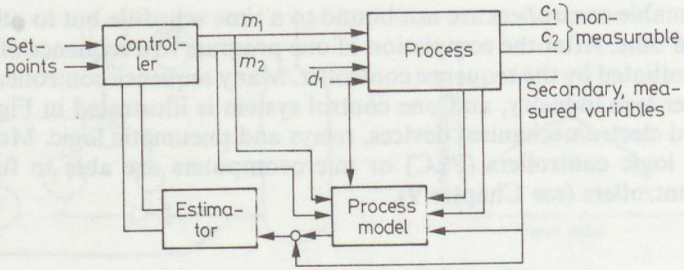


Fig. 2.23 Inferential control

In order that the observer state converges towards the actual state of the process it is necessary to have a suitable weighting of the differences between the measured values of the output variables of the process and the computed values of the observer. A coupled controller manipulates the process input variable and controls the desired output variable.

The observer theory was introduced by Luenberger [2.15]. Several types of observers have been developed and state controllers have been designed and applied [2.7].

Control systems where the controlled variables cannot be measured directly, and therefore the unmeasured variables are calculated with the aid of a process model, are generally called inferential control systems. The process model is coupled parallel to the process and the behaviour of the inputs and complementary (auxiliary) outputs is evaluated. An estimator is applied to calculate the behaviour of the controlled variable. The principle is shown in Fig. 2.23, and a detailed description can be found in the literature [2.10]. As an internal process model is required for all the control systems mentioned above, these can be interpreted as what is known as internal model control (IMC) described in detail by Garcia and Morari [2.6]. In this respect the predictive control concept is a subsystem of IMC. Different expressions are also used according to the nature of the variables; for instances, for deterministic signals the term observer, and for stochastic signals the term Kalman filter is used.

### 2.6.3 ADAPTIVE CONTROL

Several chemical processes require the retuning of controllers during operation if the operating point is changed. As most processes in the chemical and related industries are nonlinear and time-dependent, their dynamic characteristics change with time and performance (load).

The procedure for the automatic selection of the optimum controller parameters is called adaptive control. Other expressions, such as self-tuning control, or autotuning, self adjusting, etc., are also used. There are two basic approaches to open loop and closed loop adaptation; one with process identification, the other with pattern recognition [2.20].

The open loop version of controller parameter adaptation has been used for several years in batch control systems for overshoot protection. The control system's state is changed (switched) if the controlled or the disturbance variable reaches a predetermined value. A batch reactor temperature control is an example.

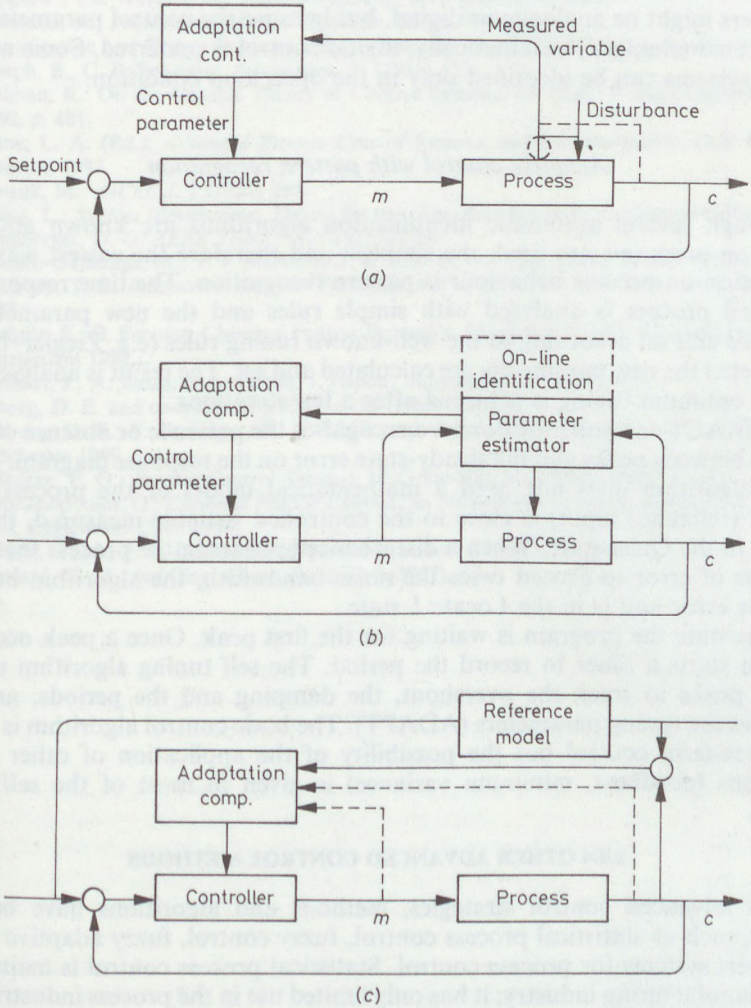


Fig. 2.24 Adaptive control schemes. (*a*) open loop adaptation; (*b*) model identification adaptive system (MIAS); (*c*) model reference adaptive system (MRAS)

*Adaptive control with process identification*

The method of continuous closed loop adaptive control using a process model depends on the way in which the model is constructed. If the process model is known a priori, the control system is called a Model Reference Adaptive System (MRAS), if the model is constructed by identification methods, the system is called a Model Identification Adaptive System (MIAS). It should be mentioned that most commercially available adaptive controllers are of the MIAS type.

The basic schemes of these adaptive control systems are shown in Fig. 2.24. The controllers might be analogue or digital, but because the control parameters have to be altered (changed) automatically, digital control is preferred. Some adaptive control systems can be identified only in the open loop condition.

*Adaptive control with pattern recognition*

Although several automatic identification algorithms are known and many simulation programs are used, the simplest and therefore the easiest way to get information on process behaviour is pattern recognition. The time response of a controlled process is analysed with simple rules and the new parameters are calculated and set according to the well-known tuning rules (e.g. Ziegler–Nichols, Cohen, etc.) the new parameters are calculated and set. The result is analysed again and the optimum tuning is achieved after a few iterations.

The EXACT controller of Foxboro recognises the presence or absence of peaks, the time between peaks and the steady-state error on the response diagram. The self tuning algorithm does not need a mathematical model of the process. If the setpoint (reference input) is close to the controlled variable measured, the algorithm is in the Quiet state. When a disturbance appears in the process that causes the value of error to exceed twice the noise bandwidth, the algorithm begins to track the error and is in the Locate 1 state.

In this state the program is waiting for the first peak. Once a peak occurs the program starts a timer to record the period. The self tuning algorithm uses the verified peaks to track the overshoot, the damping and the periods, and then calculates the tuning parameters (ADAPT). The basic control algorithm is usually PID three-term control but the possibility of the application of other control algorithms (deadbeat, minimum variance) is given in most of the self tuning systems.

### 2.6.4 OTHER ADVANCED CONTROL METHODS

Other advanced control strategies, methods and algorithms have been developed, such as statistical process control, fuzzy control, fuzzy adaptive control and expert systems for process control. Statistical process control is mainly used in the manufacturing industry; it has only limited use in the process industries. The development of computer applications has led to the use of artificial intelligence (AI) and thus knowledge-based expert systems have been developed. There are expert systems for control system design and for on-line process control.

## REFERENCES


[2.1] Bristol, E. H.: On a new measure of interaction for multivariable process control. *IEE Trans.* AC-10, 1966.

[2.2] Campbell, D. P.: *Process Dynamics.* John Wiley, New York 1958.

[2.3] Cutler, C. R., B. L. Ramaker: Dynamic Matrix Control-A Computer Control Algorithm. Paper No. 51b, *AIChE National Meeting,* Houston, April 1979.

[2.4] Eykhoff, P.: *Automatisierungstechn.* 36 (11–12), (1988) 419.

[2.5] Földes, P., I. Nagy: *Period. Polytech. Chem. Eng.* 10 (2), (1966) 197.

[2.6] Garcia, C. E., M. Morari: *Ind. Eng. Chem. Process Des. Dev.* 24 (2), (1985) 472.

[2.7] Hippe, P., Ch. Wurmthaler: *Zustandsregelung.* Springer, Berlin 1985.

[2.8] Isermann, R.: *Prozessidentifikation.* Springer, Berlin 1987.

[2.9] Identification and System Parameter Estimation. *8th IFAC/IFORS Symposium* 1988 Beijing.

[2.10] Joseph, B., C. B. Brosilow: *Automatica.* 21 (1985) 527.

[2.11] Kalman, R.: On the General Theory of Control Systems. *Ist IFAC World Congress,* Moscow 1960, p. 481.

[2.12] Kane, L. A. (Ed.): *Advanced Process Control Systems and Instrumentation.* Gulf Publ. Co., Houston 1987.

[2.13] Kwauk, M.: *AIChE J.* 2 (1956) 240.

[2.14] Ljung, L.: *System Identification Theory for the User.* Prentice-Hall, Englewood-Cliffs 1987.

[2.15] Luenberger, D. G.: *IEEE Trans.* AC-16 (1971) 596.

[2.16] Marino-Gallaraga, M., T. J. McAvoy, T. E. Marlin: *Ind. Eng. Chem. Res.* 26 (1987) 521.

[2.17] McAvoy, T. J.: *Interaction Analysis Principles and Applications.* ISA Research Triangle Park 1983.

[2.18] Mohilla, R., B. Ferencz: *Chemical Process Dynamics.* Akadémiai Kiadó, Budapest and Elsevier, Amsterdam 1982.

[2.19] Richelet, J., A. Rault, J. L. Testud, J. Papon: *Automatica.* 14 (1978) 413.

[2.20] Seborg, D. E. and co-workers: *AIChE J.* 32 (1986) 881.

[2.20a] Seborg, D. E., T. R. Edgar, D. A. Mellicamp: *Process Dynamics and Control.* John Wiley, Chichester 1989.

[2.21] Shinskey, F. G.: *Process Control Systems.* McGraw-Hill, New York 1988. 3rd ed.

[2.22] Stephanopoulos, G.: *Chemical Process Control: An Introduction to Theory and Practice.* Prentice-Hall, Englewood-Cliffs 1984.

[2.23] Valyda, G. M., P. B: Deshpande: *Hydrocarbon Proc.* 67 (6), (1988) 53.

[2.24] Howard, G. M.: *Ind. Eng. Chem. Fundam.* 6 (1967), 86.

CHAPTER 3

# PRINCIPLES OF PROCESS INSTRUMENTATION DESIGN

The main scientific disciplines of instrumentation and process control were discussed in the previous chapters. The design methods based on these disciplines are presented in this Chapter. Process instrumentation design depends on the industry in which it is applied, on the manufacturer or contractor, and on the country where the plant will be erected. Modern design methodology, based on scientific research and development work, is converging to more and more uniform design methods. Nevertheless, the great variety of microprocessor- or computer-based control systems, each with their own specific architecture, programming system, etc., makes it difficult to describe these systems or to implement more than one system in a plant.

## 3.1 DESIGN METHODOLOGIES

The design process is an old activity, but only with the increasing use of computers did engineers become aware that this activity is not well understood and had not been investigated scientifically. Several models of the design process and design algorithms appear in the literature [3.15]. Instrumentation and process management is an essential part of the chemical plant and its design is closely related to technology and equipment design. On the other hand, design has to support the decision on instrumentation of the process and to aid the realisation of the control system. The subsequent phases of investment are shown in Table 3.1 from decision support to maintenance support; the place and role of design can be determined from this table. Modern instrumentation and control systems are generally microprocessor- or computer-based and design work is usually aided by computer, therefore computer-aided design methods have to be mentioned in this Chapter, although computer control is dealt with in Chapter 10. Finally, it should be mentioned that retrofitting the instrumentation and control system of an existing plant can decisively alter the profitability of the plant or its production. The design methodology of retrofitting is slightly different from that of a grass-roots plant.

Design methods also depend on the application of the controlled equipment. There is a difference between designing a control system for a mass-produced object, like an automobile, and designing the instrumentation of a chemical factory. Only the latter case is treated in this book.

Table 3.1. Phases of instrumentation

| | |
|---|---|
| DECISION SUPPORT | General economic and social conditions<br>Identification of process management and control requirements<br>Specification of the degree of automation<br>Preliminary description and cost estimation of the instrumentation and control system<br>Feasibility study |
| DESIGN | Detailed description of the requirements, flowsheet of the process<br>Design procedure using design methods and algorithms<br>Configuration of digital systems<br>Documentation editing |
| REALIZATION | Commissioning<br>Purchase<br>Construction, mounting<br>System tests<br>Validation of the documentation |
| START & OPERATION | Start up<br>Operation<br>Maintenance<br>Diagnosis<br>Development, alteration |

### 3.1.1 SPECIFYING THE DEGREE OF AUTOMATION

The expression 'grade of automation' is used mainly in a qualitative sense, and the classes are defined verbally. A possible classification is as follows:

— local measurement, manual control (1, none)
— local measurement, automatic control, some alarms (2, minimum)
— centralised measurement, transmitters, controllers, interlock systems (3, normal)
— centralised measurement and control systems digital data processing, PLC
— centralised monitoring and control with on-line analysis, special control schemes, batch controllers (4, improved)
— distributed digital control system with advanced control algorithms, or computer control (5, advanced)
— hierarchical digital control, advanced algorithms, plant management system, automatic start up and shut down (6, advanced plus sequence).

The indicated numbers and levels are the equivalent grades as defined by a large chemical company [12.12]. Another classification of automatic control systems has been defined in the USSR, and this is shown in Table 3.2.

Table 3.2. Automatic technological process control systems, ASU-TP

| No. | Name and level of the control system | Number of monitored and controlled parameters | Characteristic application area |
|---|---|---|---|
| 1 | Local controllers | max. 20 | Machine tools with CNC, automatic weighing systems, blenders, etc. |
| 2 | Group of local controllers | max. 50 | Heating furnaces, distillation columns, waste heat boilers, compressor stations, etc. |
| 3 | Automatic process control of small systems | max. 100 | Batch-type furnaces with batch preparation, in-line blenders for kerosene, DNC machine tools, small chemical process equipment, etc. |
| 4 | Computer control and automatic process monitoring | max. 300 | Electrolytic cells, oil refining equipment, catalytic cracking plant, steel converters, paper plant, etc. |
| 5 | Automatic (computerised) technological process control systems | max. 600 | Medium size ammonia fertiliser plants, 2000 $m^3$ blast furnaces, power plant up to 300 MW capacity, etc. |
| 6 | Automatic technological process control systems | max. 1000 | Power plants up to 600 MW capacity, fertiliser plants, oil refineries, etc. |
| 7 | Automatic technological process control systems | above 1000 | Power plants with 800 to 1200 MW capacity, nuclear power plants, large blast furnace complexes, large chemical and petrochemical complex plants, etc. |

There are methods for calculating the degree of automation which give exact numbers (percentages). A well-known definition states that the number of control loops divided by the number of all loops which could be used in automatic control system gives the degree of automation. Full automation will be described as 100% and no automation as 0%. Unfortunately these numbers are not very significant for an evaluation of the economic benefits of automation. The concept of instrumentation and the degree of automation is usually described in the tender or in the pre-feasibility study. The investment plan, as used in planned economies, contains the instrumentation concept and its investment cost (capital cost).

### 3.1.2 PROJECT DOCUMENTS

Each country has its regulations, standards and normal practices for specifying the documents required for a major investment. Where the investor is the State, which is the situation in the planned economy countries, the rules are mandatory. In other situations the tenders and practices of the large contractors and engineering companies regulate the structure and content of the documentation fairly well.

There are usually three steps in the creation of project documents.

— Feasibility study or, in planned economies, an investment plan.
— Tender, or task plan.

— Technical project plan, including manufacturing drawings, construction plans, etc.

The documentation for maintenance, repair or alteration of the plant is theoretically the technical project plan, but modifications are usually necessary during construction and a revised and finalised plan is required. The nomenclature of these documents is very different in each branch industry or country. In Hungary it is common practice to call them A, B, C and D plans.

In the following we shall concentrate only on the instrumentation part of these documents.

*Pre-investment studies*

A UNIDO Manual [3.16] classifies pre-investment studies as:

(*i*) Identification of investment opportunities (Project ideas).
(*ii*) Preliminary selection stage (Pre-feasibility study).
(*iii*) Project formulation stage (Techno-economic feasibility study).
(*iv*) Evaluation and decision stage (Evaluation report).

UNIDO has released a Computer Model for Feasibility Analysis and Reporting, known as COMFAR, to facilitate project preparation and evaluation.

A feasibility study must provide a basis — technical, economic and commercial — for an investment decision on an indrustrial project. It should define and analyse the critical elements that relate to the production of a given product, together with alternative approaches to such production. Such a study should provide a project of a defined production capacity at a selected location, using a particular technology with defined materials and inputs at identified investment and production costs, and sales revenues, yielding a defined return on investment.

Final estimates on investment and production costs are only meaningful if the scope of the project is defined unequivocally in order not to omit any essential part and its relevant cost. The scope should be defined in drawings and schedules which should then serve as a support structure during further project work.

This means that the cost of instrumentation and its effect on production and operation costs should be evaluated. Estimation and calculation methods are presented in Chapter 12. Part of the plant investment is the instrument maintenance and repair shop, the utilities, etc., which are required to operate automatic control equipment.

On the flowheets of the project document the fundamental instruments, controllers or computers have to be shown. The necessary location and space for instruments should be provided in the layout drawings. Control rooms and analytical laboratories have to be sited within the plant. This means that preliminary data for architectural design should already be prepared at this stage. The use of computer control means inclusion of items which are not considered in conventionally instrumented plants. Software development or adaptation, testing and debugging will probably be required. The feasibility study also contains the training costs.

### *Tender*

If a second phase is necessary in project planning, a more detailed investment plan or task plan can be prepared. This document contains detailed information on principal equipment, including instrumentation. The same is true if a tender has to be prepared. The main task of this document is to obtain a cost estimate which is accurate enough for a contract. An appendix to the reader containing the main requirements for ordering and evaluating offers for instruments can be useful.

### *Technical project documentation*

On the basis of the feasibility study or tender, the detailed design phase starts. The usual design procedure may be separated into two major divisions. The first involves the actual design of equipment to be manufactured. The second consists of specifying the operating conditions for standard manufactured equipment and machinery. The process engineer must be familiar with the methods of selection used by the manufacturer so that the required operating specifications can be compiled.

The instrumentation part of a technical project document usually consists of a general description of the whole system and its objectives, instrument and other equipment lists, technical calculations and functional description, and material lists. The text is illustrated with the graphical part of the documentation, which includes flowsheets (P&ID), instrument loop diagrams, detailed construction drawings, time charts, logic diagrams, etc. Digital control systems and computer control system require software documentation, configuration documents and, if required, graphical displays. A detailed cost estimate is indispensable.

The complexity of process plants requires the preparation of drawings to be used in locating equipment. The location of equipment and instruments, especially transmitters and control valves, must be carefully planned. Connection dimensions must be shown on the drawings to allow their construction. These drawings are needed for prefabrication, too. In order to assist the designer in drafting these drawings the manufacturers' data are required (sales literature, catalogues, installation manuals, etc.).

Shop drawings of control panels, desks, protection boxes and distribution boxes are needed only if special requirements cannot be fulfilled by suppliers.

Installation may require the provision of handling catwalks and ladders; trasmitters and connecting piping may need heating or cooling and insulation. The necessary detailed drawings are part of this project section. Connection schemes of the terminal boards are necessary for installation and maintenance. The single line schematic wiring or circuit diagrams are used to lay out and display conduit runs and accessory equipment. Drawings have to be prepared, showing details of terminal points of conduit runs, entrances of conduits to buildings or exact arrangements required for clearance. Installation details are usually prepared for those instruments directly connected to other equipment. Tabulations must be provided which list by number all circuits and conduits, the drawings on which the conduit is shown, conduit length and size. These documents are

prepared separately for electrical and pneumatic control systems, not to mention the optical cables.

The manufactures have to supply installation, operating, testing and calibrating instructions and certified dimensional drawings.

*Hand-over documentation*

After acceptance tests, the technical and installation documentation should be handed over to the operating personnel for the maintenance of the control system. The final state should be registered on these documents. If necessary, newly made parts have to be provided.

The form of documentation changes with time and with the expansion of new design techniques. Text and drawing can be produced on microfiche or microfilm. With adequate magnifying reading equipment, the use of paper mountains can thus be avoided. Computer aided design methods produce different outputs according to the client's wishes. Conventional drawings and lists, or magnetic tapes and discs can be delivered. Hand-over, or final documentation of digital control systems is not as uniform as it is for conventional systems. Microprocessor-based control systems have the control program in a read-only memory (ROM). The program is finally burned in after the test runs, and the final documentation should be produced by the system itself. This is called reverse documentation (in German: Rückwärtsdokumentation) and is used in the computer-aided design of control system, and is recommended for DCS and PLC-S.

It is important both for the vendor and the user to know the exact program in the system in the case of a serious fault. Programs can easily be altered and without documentation the responsibility cannot be decided. Standardisation of process control software tests is in progress, but the very complex problems of source code, operating system, compiler application, copyright and related questions cannot be solved easily.

## 3.2 GRAPHICAL DOCUMENTATION

Instrumentation design procedures need many types of drawings and diagrams, and many graphical symbols are used. A brief survery of these will now be presented.

### 3.2.1 FLOWSHEETS

The primary engineering diagram which depicts a process is the flow diagram or flowsheet. There are several types of flow diagrams, depending on the way in which details and data are presented. One particular type is best suited to each phase of the design procedure.

The simplest flow diagram is a block diagram in which the main units of the plant or technology are shown as blocks with their sequence and connections, and the flows of material and energy between them are depicted. It gives a general overview, and the control hierarchy can be designed with its aid.

Technological flow diagrams or process flow diagrams must be drawn in such a way that the process flow and unit operations are immediately apparent. This is

accomplished by omitting all but the essential details, employing heavy lines for major flow lines. Equipment is represented by symbols, which are standardised in several countries. Valves, utility lines and spare items of equipment are omitted, except in those cases when it is necessary to clarify the process flow. Only those instruments are shown which are essential to the control of the process. The most important temperatures, pressures, flows and concentrations are indicated.

Parallel operating items are generally not drawn, and therefore this flowsheet is not sufficiently detailed to design the control system. Close cooperation between process engineers and control begins at this stage. The function and importance of the process flowsheet is dealt with in the literature [3.20].

### *Piping and instrumentation diagram*

After the process flowsheet calculations have been completed a detailed flow diagram can be prepared; this is called the Piping and Instrumentation Diagram (P&ID). This is the central source of information for all design groups. As every piece of equipment and all pipes are drawn on it, with their sizes indicated, the instrument engineer can use its data. All sensors, transmitters and final control elements with their proper location are shown on the P&ID.

*Graphical symbols* for instruments and control systems are internationally standardised by ISO 3511. This standard is of great importance and is used throughout this book; its main features are explained in the Appendix. It is well suited for conventional instruments and control systems, and its extension to computer control systems is under way.

A special type of process flowsheet is applied on graphics panels in control rooms and on the graphics displays of computer control systems. Generally these diagrams have to conform with the standards, but aesthetic and ergonomic reasons can justify slight deviations. Attention has to be paid to the application of colour, so as not to interfere with alarm colour standards. For very complex control systems a special P&ID might be nesessary, in which the process equipment and piping is drawn only to the extent required to show the instrument connections and to understand their function. This diagram is closely related to the instrument loop diagrams.

### *Information flow diagrams*

The structure of control systems and computer programs is best understood with the aid of information flow diagrams, which are valuable tools for the analysis and synthesis of such systems.

Block diagrams contain blocks for functions and lines for signals. In system graphs or signal flow diagrams, nodes designate signals and edges show the transfer functions. Fig. 3.1 shows some examples.

Data processing flowcharts (flow diagrams) are used for computer program development. Graphical symbols for this type of diagram and their application are standardised in ISO 1028 and ISO 2636. A few examples of the standard symbols are given in Fig. 3.2.

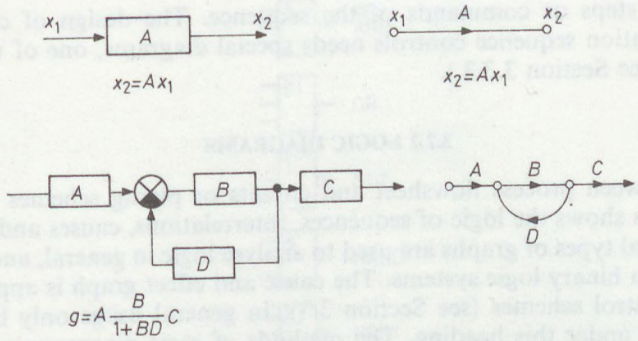


Fig. 3.1 Block diagram and signal flow diagrams

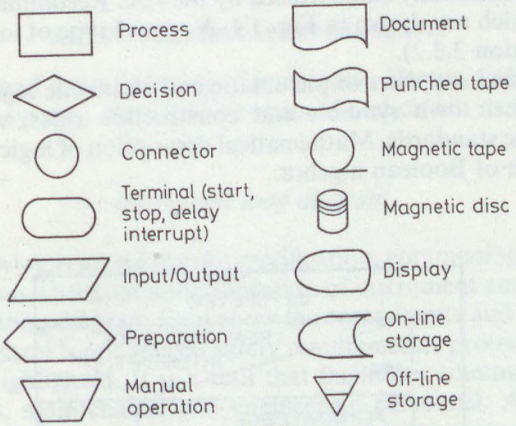


Fig. 3.2 Data processing flowchart symbols

*Structograms*

A structogram is an alternative way of describing the flow of computer programs without using jumps. The expression Nassi–Schneiderman diagram is also used (DIN 66261). As an example the structogram of a digital controller is shown in Fig. 3.3 [3.3]. The control program is an endless loop. Each program run is started by the arrival of the RTC pulse. On the diagram AUTOREQ means that the operator has REQuired AUTO(matic) mode. The procedure INTCON will set initial conditions for the Integral and Differential terms in such a way that smooth transfer is obtained. MAN means manual operation, and the other expressions are self-evident.

A form of documentation which is frequently used for sequential processes and batch control is the flowchart. This is essentially a block diagram with blocks

representing steps or commands of the sequence. The design of complicated, parallel operation sequence controls needs special diagrams, one of which is the state chart (see Section 3.3.3.).

### 3.2.2 LOGIC DIAGRAMS

A link between process flowsheet and circuits or piping schemes is the logic diagram. This shows the logic of sequences, interrelations, causes and effects in a system. Several types of graphs are used to analyse logic in general, and others are used to design binary logic systems. The cause and effect graph is applied for the design of control schemes (see Section 3.3). In general usage only binary logic diagrams fall under this heading. The methods of logic diagramming of binary interlock and sequencing systems for startup, operation, alarm and shutdown of equipment and processes in the chemical and petroleum industries are standardised in several countries (ANSI-ISA S 5.2). The graphical symbols used in binary logic diagrams are internationally standardised by the IEC Recommendation 117-15, a few symbols of which are shown in Fig. 3.4. A special type of logic diagram is the fault tree (see Section 3.3.2).

Manufacturers and suppliers of pneumatic and electronic logic control systems have developed their own symbols and construction rules, which are not all compatible with the standards. Mathematical description of logic diagrams is made possible by the use of Boolean algebra.

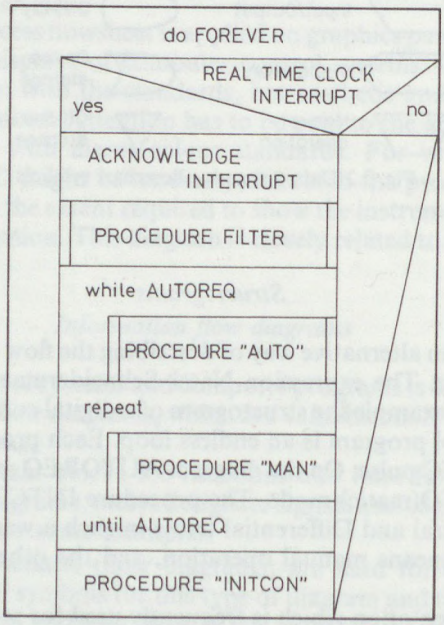


Fig. 3.3 Structogram

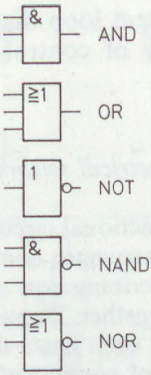


Fig. 3.4 Graphical symbols for binary logic diagrams

### 3.2.3 INSTRUMENTATION DIAGRAMS

The installation and manufacturing of pneumatic, electric and hydraulic instruments and control systems need both functional and circuit drawings.

*Instrument loop diagram*

This type of drawing is an aid for the specification, commissioning, field installation, interconnection, checkout and calibration of instrument and control systems.

The instrument loop diagram must show the components and accessories of the instrument and control loop. Special safety requirements, protection and location rules have to be highlighted. It is a tool that facilitates communication between design, operations, maintenance and engineering personnel. As in a schematic drawing, graphical symbols are used to show the components and their connections. Standard instrument symbols can be used, but several instrument suppliers have their own symbols for detailed representation. An instrument loop diagram must contain the information needed to accommodate the user, including at least:

— all devices and items, with labels;
— identification of the loop and each component of it, with connections to recorders or computers;
— all interconnections with identifying numbers for electrical cables, pneumatic and hydraulic tubing;
— junction boxes, bulkheads, ports, computer input/output, grounding system, etc.;
— energy sources;
— location of devices.

The numbering (tagging) on this drawing must agree with the corresponding P&ID, to which this is a supplement. It is desirable to provide enough pro-

cess information on the instrument loop diagram to describe the process side of the loop and provide clarity of control action, interlocks, etc. (see also ANSI-ISA S 5.4).

*Electrical schematics*

The electrical schematic is a functional circuit diagram showing the logic functions of signalling, tripping and sequence control systems. The schematic is the engineer's visual language for describing how a circuit works. The assembly print shows how to put the hardware together. These two documents must be related by common labels and numbers, but each has a distinct purpose.

The schematic is independent of equipment manufacturers, types or physical appearance and uses standard graphical symbols and rules, i.e. conventions. The schematic is generally called a ladder diagram. The ladder diagram is very popular among electrical and control engineers, and although it was developed originally

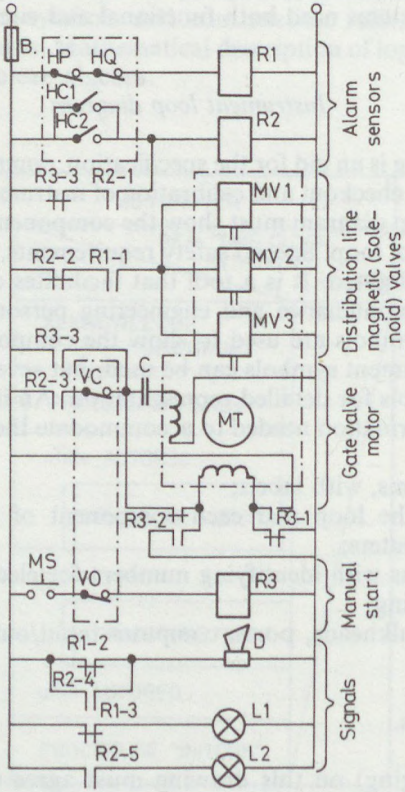


Fig. 3.5 Ladder diagram

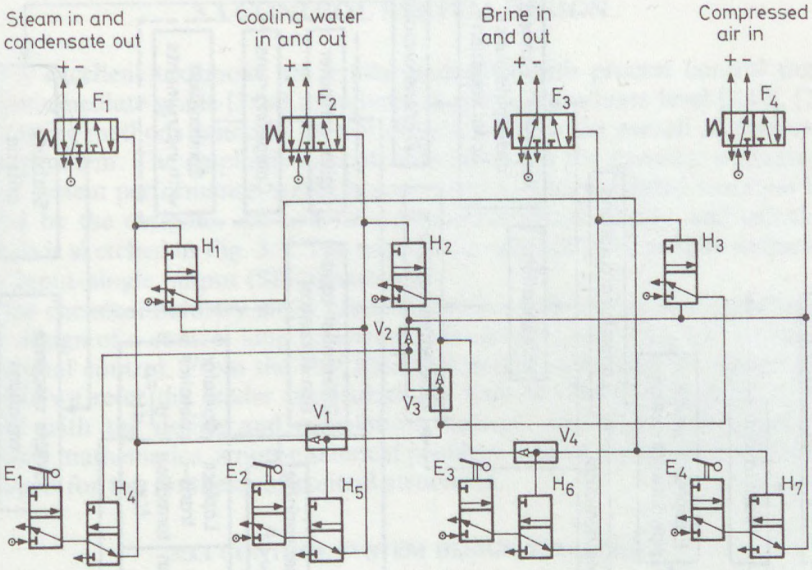


Fig. 3.6 Pneumatic circuit diagram

for designing relay systems it is now also used for programming electronic PLCs. Most PLC manufacturers provide programming languages and devices with which the engineer who is familiar with ladder diagrams can easily program the PLC. If the programming device has a graphics terminal and graphics output, manual drafting of the ladder diagram is not necessary. A typical ladder diagram is shown in Fig. 3.5.

### *Electrical wiring drawings*

Cable connections to a relay system and to the instrument panels are necessary for prefabrication and installation, not to mention maintenance. Design aids are available for these drawings, e.g. preprinted details, automatic symbol drafting devices and program packages for CAD systems.

### *Pneumatic and hydraulic control schemes*

The connecting pipes of pneumatic and hydraulic control devices have to be drafted, in a similar way to the electrical wiring drawings. The graphical symbols for the schemes are standardised by CETOP, an international organization, but several national and international standards are used, too. There are rules and conventions for construction of the pneumatic circuits [3.17]. A detail of a pneumatic circuit diagram is shown in Fig. 3.6. Computer-aided design methods are available as well.

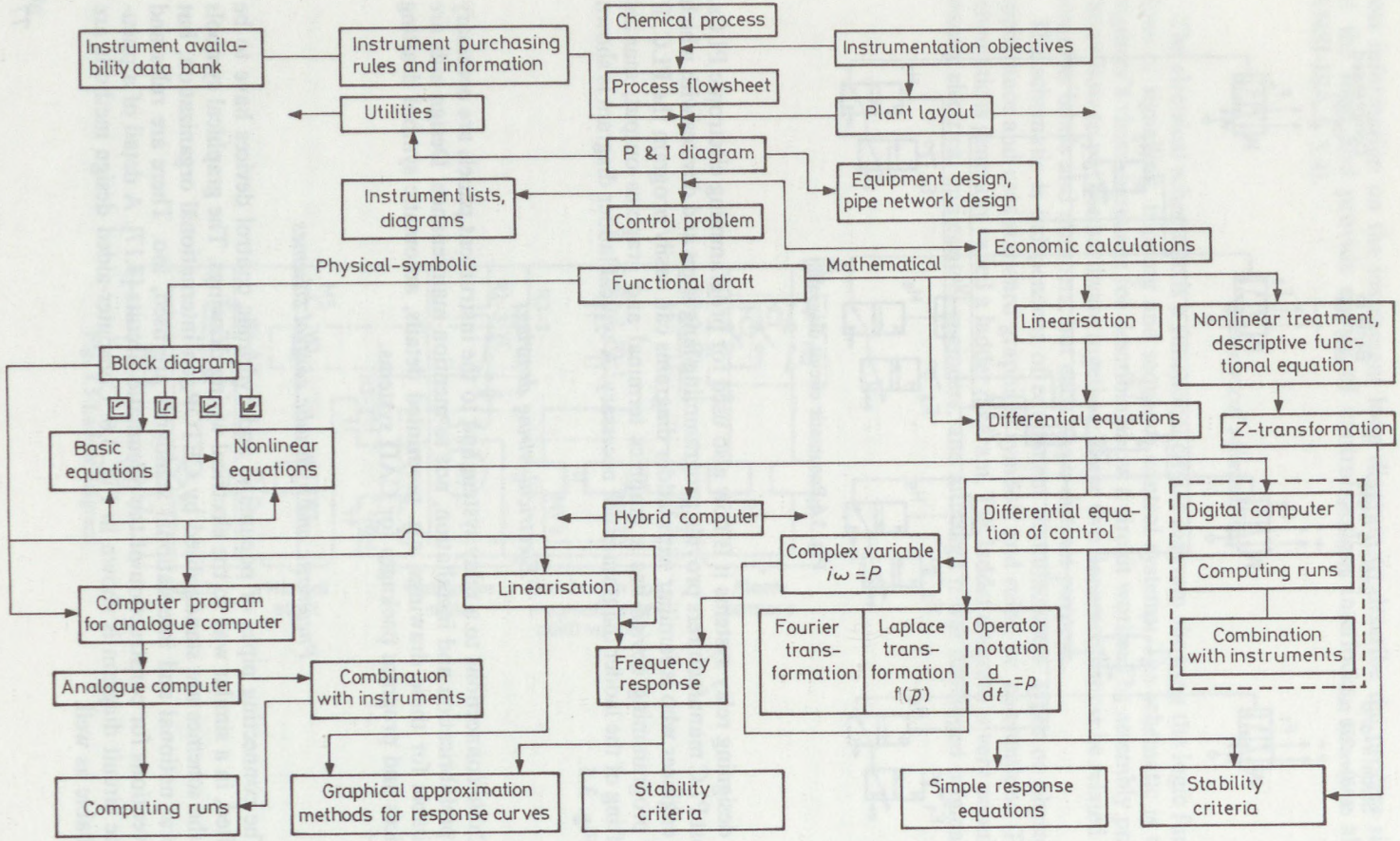


Fig. 3.7 Control system problem solving methods

## 3.3 CONTROL SYSTEM DESIGN

Many excellent textbooks are available dealing with process control ranging from intermediate grade [3.24] to university and postgraduate level [3.19], [2.22]. The existing methods generally do not directly address the overall control system design problem. The emphasis in control theory is on the dynamic evaluation of control system performance, with the controlled and manipulated variables being selected by the designer. An overview of control system design and calculation methods is sketched in Fig. 3.7. The use of loop calculation is usually restricted to single input–single output (SISO) systems.

In the chemical industry many constraints have to be taken into consideration in the design of a control loop or system. This is also true when one is searching for optimal control. From the vast literature dealing with control system design methods we refer the reader particularly to Kuo [3.14] and Shinskey [2.21]. In parallel with the design and calculation methods requiring sophisticated and advanced mathematics, a non-numerical problem solving design method has been developed for the synthesis of control structures.

### 3.3.1 CONTROL SYSTEM DESIGN STRATEGY

In classical control system theory the emphasis is on control system analysis and synthesis using the measured and manipulated variables selected a piori. For multivariable systems the pairing of variables is not self-evident and there are certain rules and design aids (e.g. the RGA) but the experience of the designer is decisive. A systematic strategy for practical work is under development. A suggested design algorithm is shown in Fig. 3.8, which is a modified form of the one published by Govind and Powers [3.8].

General control objectives as already stated, together with the flowsheet of the process present the initial information. The goal is to transform the process flowsheet to a P&ID and prepare a preliminary instrument list. Problem solving proceeds by the use of specific rules to generate alternative control structures. The alternatives are evaluated using heuristics derived on the basis of both theoretical and practical considerations. The mathematical models of the units are used, if available. Chemical processes are represented by directed graphs, called Process Flowsheet Graphs, which represent the material flow in the processes, wherein nodes designate flow rates and directed edges represent process units.

Unit oprations are represented at two levels:

(1) the equation level,
(2) the cause and effect level.

At the equation level each unit operation is represented by its input–output model (e.g. a transfer function). The structure of the equations is represented by a table called the 'structural array'. The columns of the array correspond to all the variables and the rows correspond to all the equations, with indications whenever a variable appears in an equation. This has to correspond to the degrees of freedom approach.

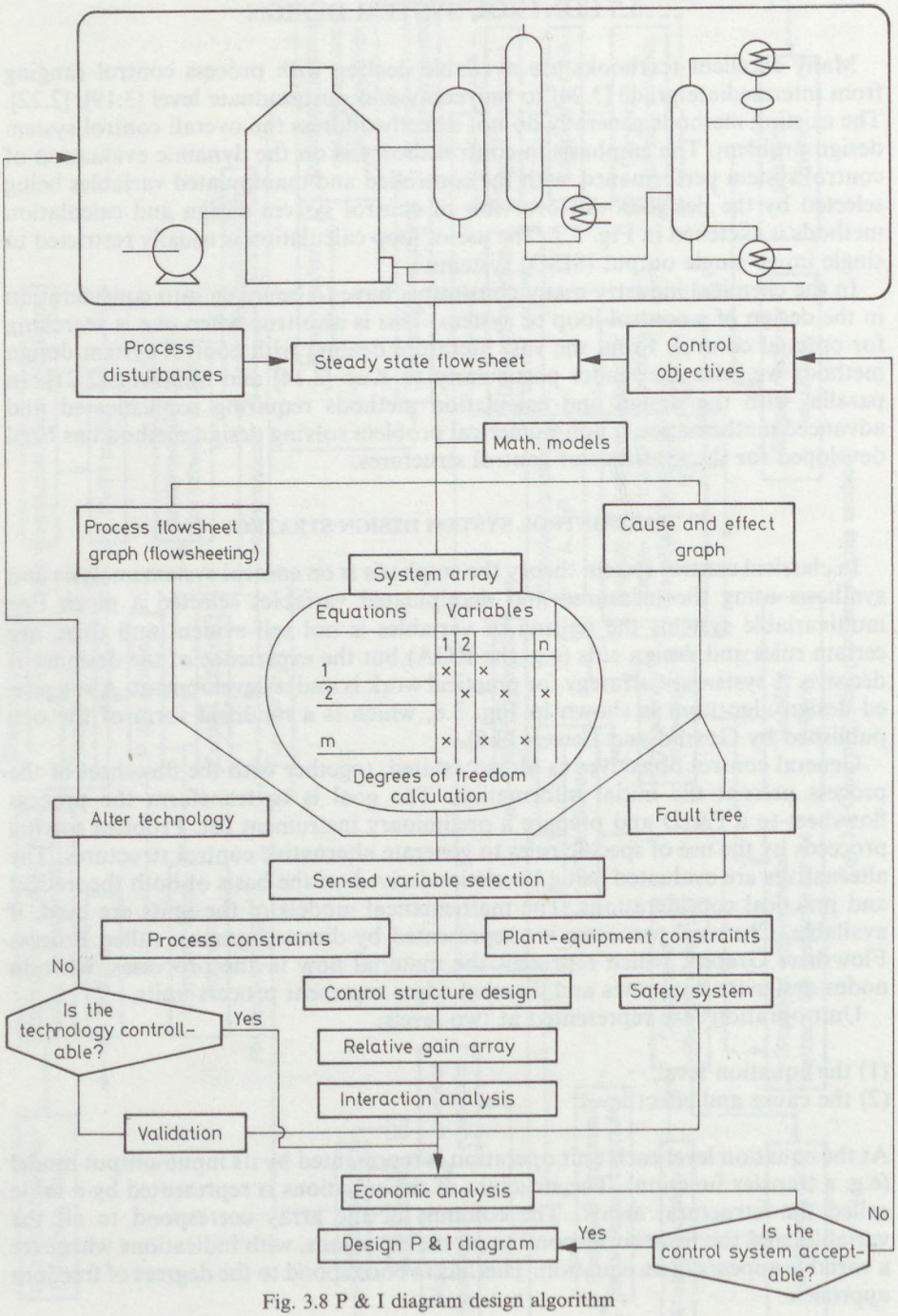


Fig. 3.8 P & I diagram design algorithm

At the causal level, the cause and effect relationships of the system are represented by a directed graph, where the nodes designate process variable deviations and directed edges denote the relationships between the variables. The direction of an edge indicates the causality of the process. The graph is derived from the dynamic equations of the process. The cause and effect graph allows easy detection of variable interaction and the structure of the graph also has a bearing on the controllability of the system. By tracing paths through the graph, it is possible to find which variables affect a specific process variable, or which variables are affected by a given variable. It is also used to design fault trees (see Section 3.3.2).

Sensed variable selection is another important feature of the method. The main points to be considered by the selection of variables for measurement and control are dealt with in Section 1.2.1. A design aid, which can be used if the sensed variable is difficult to measure directly, is the Sensed Variable Selection Tree. This search tree depicts the alternatives to the measurement of a variable. In advanced control systems inferential control can be used.

The possible manipulated variables can be shown on a subgoal tree. Specific heuristics are used to judge whether a certain variable can be manipulated effectively. Consider the following examples: flow is difficult to manipulate in a slurry or if the medium is at a high temperature; in most cases concentration of a fluid cannot be directly manipulated; pressure is difficult to manipulate if the fluid is a two phase mixture. In practice the dynamic mathematical models of the units are not available at the design stage and a simplified analysis has therefore to be applied (e.g. the RGA method). Given a preliminary control structure one can design the various control loops (feedback, feedforward, cascade, etc.). The control system has to be evaluated by interaction analysis and possible by computer simulation and has to be tested for economy. Several iteration steps might be necessary to reach an acceptable solution.

### 3.3.2 PROCESS FAULT DETECTION

With the increasing complexity and size of chemical plants the importance of reliability and safety increases. Special hazard analysis (HAZAN) and hazard and operability analysis (HAZOP) methods have been developed; on-line diagnosis of equipment and process fault detection methods are used in several plants. The great number of possible faults makes the use of new design methods necessary. Verbal description and cause and effect graphs are used, but the most effective design tool is the *fault tree*.

The fault tree is a logic diagram showing the logical sequence of the possible failures which can cause a process fault. The fault tree or alarm tree can be used to locate sensors [3.8], to check safeguards, and to design alarm and interlock systems. If the probability of a fault is indicated on the diagram, then the process reliability can be calculated. The effect of safety devices can be represented and in this case a 'protection tree' is the result [3.5].

The fault tree is also a valuable tool in process failure analysis, and can be combined with simulation [3.11]. The standard logic symbols have to be used to design a fault tree. A few special symbols have been suggested by Browning [3.4]. There are several standards relating to fault trees (e.g. ANSI N 41.4;

IEE STD 352; BS 5760 P. 3; DIN 25424). Fig. 3.9 shows part of a fault tree, as an example.

Top-down construction is generally applied. The ultimate consequence is 'Reactor explosion'. The cause of explosion may be reactor failure due to corrosion, too high a temperature or too high a pressure. A pressure rise might occur because of a failure of the inlet–outlet mechanism, or by the ignition of an explosive mixture. The safety relief valve does not open if it is defective or if it was set wrongly. An explosive mixture flows if too much of component *A* or too little of component *B* is present in the feed. Going further down, looking for the causes, we eventually reach the primary causes, which are equipment or part failures and are usually symbolised by circles. Secondary causes are outside effects, such as environmental causes. Command failure occurs if one piece of equipment or final control element is moved into a false position by a command. Kilroy failure describes the type of errors made by the operator or maintenance personnel.

With the aid of the fault tree, the instrumentation of the alarm and safety system can be designed. The fault tree helps in the design of disturbance analysis systems. The aim of a disturbance analysis system is to aid the operator in shifting out the relevant information by means of logical analysis. This analysis can be done very rapidly with a computer [3.2]. There are several software packages for off-line and on-line alarm analysis (e.g. ALSAN, PREP, CUTDET). Most of these systems have been developed for nuclear power plant operation and control, but many

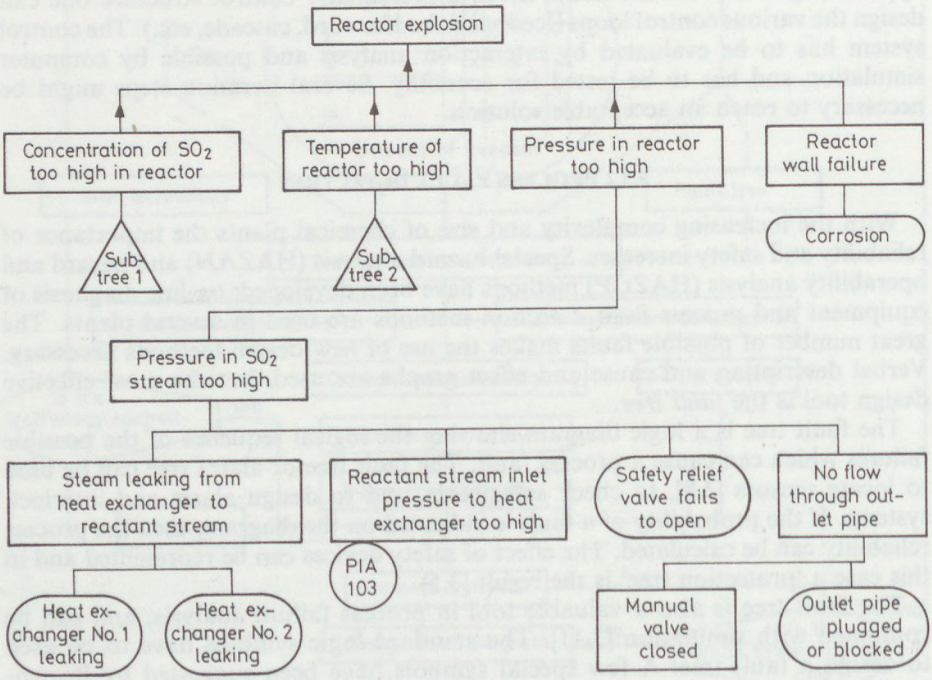


Fig. 3.9 Fault tree (after Yoon)

systems have been designed for chemical plants, too [3.1], [3.10]. Similar logic diagram and analysis systems are applied to prevent erroneous design and operation of automatic valves in complicated piping systems (e.g. tank farms).

### 3.3.3 DESIGN AIDS

In addition to the recommendations and standards already mentioned there are several design rules, codes of pratice, catalogues, prints, blanks, templates and other design aids which help control system designer to do his job more effectively.

*Unified control scheme catalogues*

Information gathered from various control schemes and control systems can be systematically evaluated, classified and edited as a reference book or catalogue. Such catalogues of typical control schemes have been compiled in the USSR

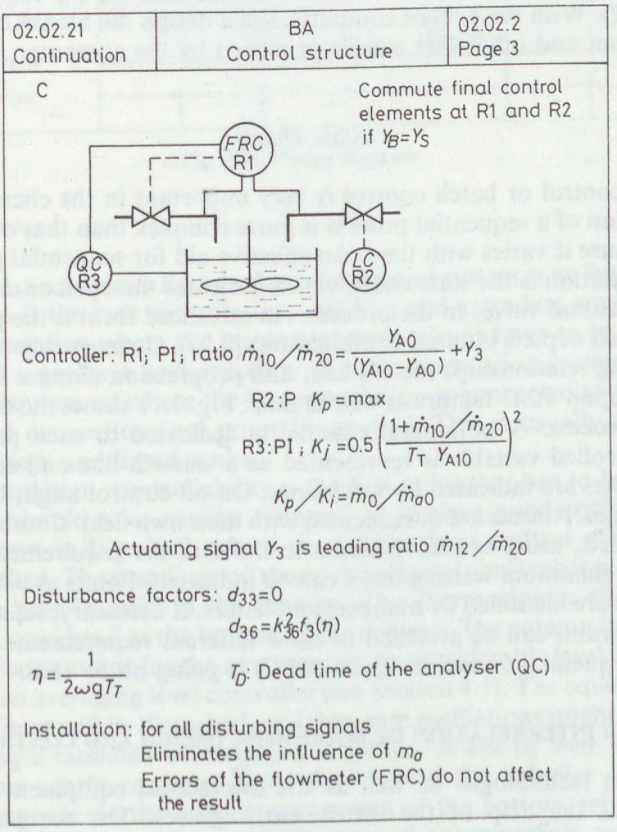


Fig. 3.10 Basic system catalogue sheet (GRW)

(Album) [3.13], in the early GDR (Basic Automation Catalogue) and FRG (VDI/VDE Process Model Catalogue). The leading instrument manufacturers all present application sheets or booklets (e.g. Taylor, Honeywell, Siemens, etc.) containing typical control schemes. The latter generally do not include numerical values and equations because these are regarded as proprietary information. As an example one sheet of the basic catalogue of an earlier Eastern German instrument manufacturing company (GRW) is reproduced in Fig. 3.10. Some of the catalogues recommend the use of certain instrument types, which can serve as a unification aid for a chemical plant or company.

*Fill-in-the-blanks methods*

The large engineering and construction companies, design offices and chemical companies have all developed their own documentation systems and, as a part of each, they have created file systems for instrumentation. These include blanks for valve and orifice calculations, cable and pipe lists, measurement or sensor lists, instrument lists, etc. Some of the blanks are standardised, e.g. for control valves (see Table 9.2). With the help of computer aided design the blanks can be used for computer input and other files can be produced by the computer.

*State charts*

Sequence control or batch control is very important in the chemical industry. Documentation of a sequential process is more complex than that of a continuous process, because it varies with time. An effective aid for sequential process design and documentation is the state chart, which indicates the open or closed positions of the contacts and valves in the process. An advanced form is the process timing diagram, which depicts internal combinations [3.23]. Concurrency is easy to show because timing relationships are explicit, and progression along a horizontal line may depend upon other factors as well as time. Fig. 3.11 shows the timing diagram of a batch process. A horizontal channel is dedicated to each parameter. The primary controlled variable is represented as a smooth line and secondary controlled variables are indicated by wavy lines. On-off control might be shown by a tape with stripes. Alarms are documented with their own field. Combinatorial logic can be included, using special symbols to indicate the requirements to be met. Maximum or minimum waiting times can be indicated. Points at which a decision must be made are identified by numbers and letters. If necessary, separate additional timing diagrams can be attached to show different requirements. Standardisation of the Sequential Function Chart (SFC) is going on by IEC.

### 3.3.4 INTERRELATION OF EQUIPMENT DESIGN AND CONTROL

The process technologist as well as the mechanical equipment and machine designer needs the help of the instrument engineer. The correlation between instrumentation and the construction of equipment depends on the class of equip-

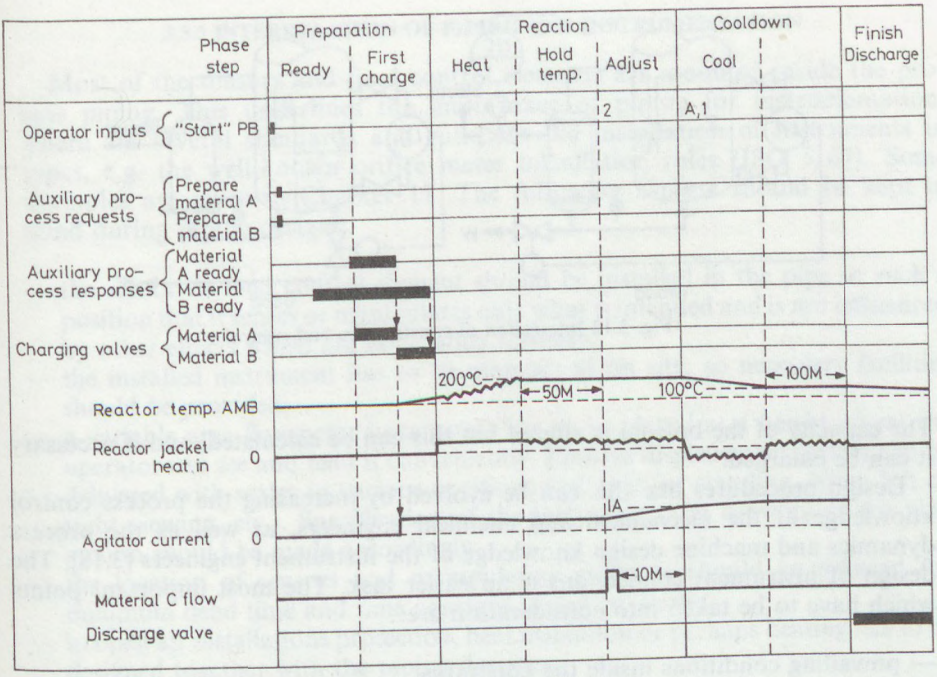


Fig. 3.11 Timing diagram

ment. The closest relation is found where the control system is an integral part of the machine, as is the case with plastic moulding and extruding equipment. Less tight is the correlation where the instrument connections have to be designed, as in the case of autoclaves and reactors. A loose correlation occurs with those machines and equipment where the instrumentation is connected to the piping or where standard connections are normally applied. This is usually true for heat exchangers, pumps and liquid tanks.

In equipment design, controllability is the first point that has to be considered. In most cases simple rules can be followed to achieve good performance. An example is shown in Fig. 3.12, where the bottom level control of a distillation column is sketched. The first diagram shows the original construction, where a level change affects heat transfer in the reboiler. The thermosiphon effect is closely related to the liquid head at the bottom of the column. The column bottom is used as an intermediate storage for the next process, so considerable level variations are allowed using an averaging level controller (see Section 4.1). The equilibrium of the distillation column will be disturbed, and flow rate oscillations might occur. In the second drawing a modified construction is shown. A bar or weir welded to the bottom ensures nearly constant liquid level above the reboiler and therefore constant boiling rate. In the other compartment of the bottom, where the liquid level controller operates, the level can change without any effect on the reboiler.

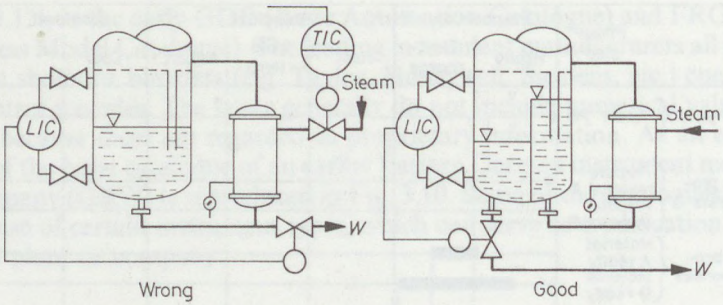


Fig. 3.12 Interaction of construction and control

The capacity of the bottom is altered but this can be calculated, and if necessary it can be enlarged.

Design procedures like this can be evolved by increasing the process control knowledge of the mechanical and chemical engineers, as well as the process dynamics and machine design knowledge of the instrument engineers [3.18]. The design of instrument connections is an easier task. The most important points which have to be taken into consideration are:

— prevailing conditions inside the apparatus;
— alterations due to process sequence, e.g. level change during filling and emptying;
— requirements due to the accuracy of measurement demanded, e.g. minimum length of sensor protecting tube;
— requirements of controllability, e.g. material and energy storage capacities, time constants;
— assembling possibilities;
— maintenance and easy repair possibilities, both of the instrument and the apparatus.

This means *inter alia* that the instrument should not be damaged during equipment maintenance or repair. In some cases measurement and control must be maintained at any price during normal operation of the plant. This can require double sensors or bypasses for measuring and final control elements.

The possibility of verification (calibration) has to be guaranteed. Thus pH meters need frequent verification with buffer solutions, and automatic weight scales (especially the continuous conveyor belt scales) need diverter facilities for verification, etc. Finally, safety regulations have to be considered in all circumstances.

In some textbooks on chemical machinery there are examples of instrument connections, but in general there remains much to be done in this respect.

### 3.3.5 INTERRELATION OF PIPING AND INSTRUMENTATION

Most of the sensors and final control elements are mounted inside the process piping. This underlines the importance of piping for instrumentation. There are several standards and rules for the installation of instruments in pipes, e.g. the well-known orifice meter installation rules (ISO 5167). Some examples are given in Chapter 11. The following aspects should be kept in mind during piping design:

— the sensor or final control element should be installed in the pipe in such a position that it senses or manipulates only what is intended and is not influenced by other effects which are not readily foreseen;
— the installed instrument has to be maintained on site, so necessary facilities should be provided;
— a variable area flowmeter (rotameter) has to be placed at a height where the operator can see and read it conveniently. Positive displacement meters can be delivered with scales in various positions (suitable for standing, lying, left or right viewing, etc.). Specification of the instrument and drawing of the pipe section should be made accordingly;
— the location of sensors and manipulating elements should be selected for minimum dead time and time constant in control loops;
— in open air installations protection, heat insulation or perhaps heating has to be designed together with the piping designer;
— sampling points and sample pipelines should be checked for correctness and should accord with the process piping;
— on the piping drawings all instrument connections have to be shown, to enable the exact fabrication of the pipe segments by the prefabricating company, and to allow X-ray and compression testing after erection. If the instrument connections have to be made after final testing, new pressure tests are necessary. For piping made from special corrosion resistant material, such as glass or tubes having an inner lining of enamel, rubber or Teflon, correction on site is not possible. Instead, a new, specially designed pipe section is needed. Time delay and extra cost arise from such operations;
— critical final control elements need two blocking valves, a bypass and a special valve;
— several instruments require clean liquid or gas streams, so strainers have to be provided in the pipe section upstream. At the first start-up of a plant the pipes are usually contaminated with dirt, rust and dust so it is recommended to wash the pipes with instruments and control valves removed, to avoid damaging or clogging them.

## 3.4 COMPUTER AIDED DESIGN

Computer aided design is used to some extent in all modern engineering firms and manufacturing companies. The tremendous development in computer hardware has allowed the widespread use of computational methods which were previously known in theory but which were not usable in practice. The graphic

power of the new workstations makes it easy for the graphically-minded design engineer to use computers as a design tool.

The cheapest workstations are built around personal computers (generally IBM compatible 16 bit PCs), and the powerful graphic workstations have the capabilities of a mainframe of yesterday. The core is usually a superminicomputer, but several systems are connected to large mainframes, or local area networks. A great variety of software is applied, ranging from simple routine calculations through sophisticated finite-element programs up to large integrated chemical plant design and project management programs. One integrated system is PEGS, developed by CADC in the UK. It aids process design and detailed engineering design. It is a modular system which includes programs for major equipment design, civil engineering design, electrical design, instrument design and piping design. PDMS provides a three-dimensional (3D) model of the plant. For pipe design, the COMPAID program provides control of material, piping and isometric drawing.

The system is a suite of programs operating on project data stored in a database structure. The use of databases allows data to be stored independently of the programs which operate on the data. Therefore each item of data need only be stored once, even though it may be required for many different design calculations or it may be output onto many different lists or schedules.

Communication of data between departments of a company or to an equipment supplier is by means of drawings, schedules and specifications. The consequences of making design changes are usually not followed through immediately on all associated documentation with the result that downstream departments work without of date information. The aspects of data consistency and control of design changes are fundamental considerations in project data management.

Computer aided design of instrumentation and control has two trends. The first, developed by electrical and control engineers, derives from control theory and is generally known as CACSD (Computer aided control system design), or CADCS (CAD control systems). The second trend has lead to the development of programs and complex program systems for the design and documentation of process control and instrumentation. Theoretically the first part, CACSD, is included in the more general second part.

### 3.4.1 COMPUTER AIDED DESIGN OF CONTROL SYSTEMS

Control engineers using sophisticated mathematical calculations have found the aid of computer programs very useful. A special branch of CAD developed under the heading of CACSD. The methods and perspectives have been reviewed several times. There are some books on this subject, but the rapid development of computer hardware and software made obsolete most of the developments of yesterday [3.9], [3.12], [3.22]. Many computer programs are available both on scientific and on commerical levels. A comprehensive catalogue of programs is periodically edited by the ETH university in Zürich under the name ELCS [3.21].

One of the first methodology of computer aided process control system design was developed by Stainthorpe and his co-workers, and is shown with a flow chart of the design procedure in Fig. 3.13. The first task of the designer is to formalise his objectives by identifying the control variables and establishing that there are

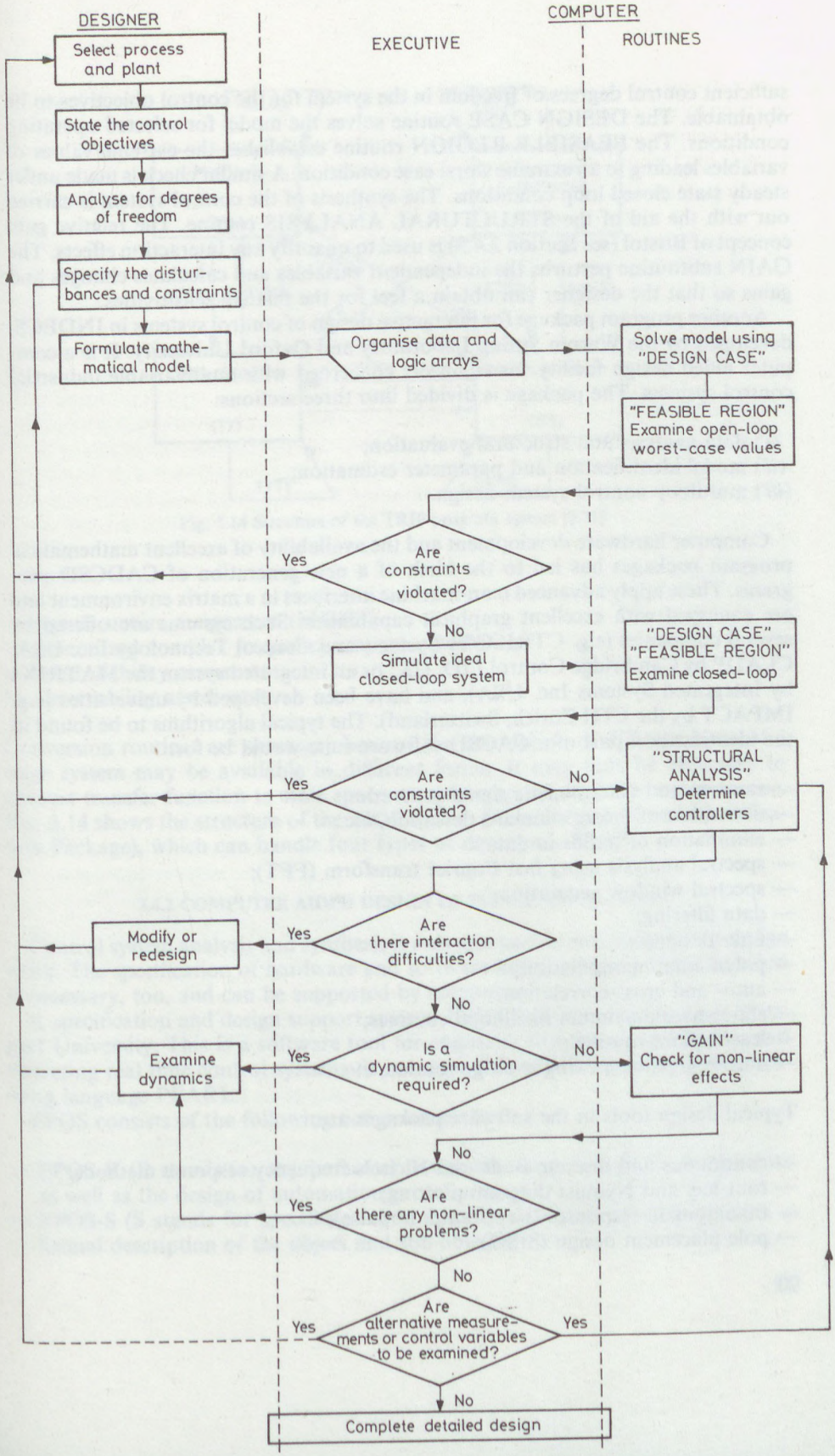


Fig. 3.13 Flow chart of design procedure (Stainthorpe)

sufficient control degrees of freedom in the system for the control objectives to be obtainable. The DESIGN CASE routine solves the model for selected operating conditions. The FEASIBLE REGION routine establishes the extreme values of variables leading to an extreme worst case condition. A similar check is made under steady state closed loop conditions. The synthesis of the control system is carried out with the aid of the STRUCTURAL ANALYSIS routine. The relative gain concept of Bristol (see Section 2.4.3) is used to quantify any interaction effects. The GAIN subroutine perturbs the independent variables and calculates changes and gains so that the designer can obtain a feel for the relative sensitivities.

Another program package for interactive design of control systems in INDECS, developed by the Warren Spring Laboratory and Oxford University. It is a computer aided design facility for engineers concerned with multivariable industrial control systems. The package is divided into three sections:

(*i*) data analysis and structural evaluation;
(*ii*) model identification and parameter estimation;
(*iii*) multiloop control system design.

Computer hardware development and the availability of excellent mathematical program packages has led to the birth of a new generation of CADCSD programs. These apply advanced man-machine interfaces in a matrix environment and are equipped with excellent graphical capabilities. Such systems are offered by several companies (e.g. CTRL-C by Systems and Control Technology Inc. USA; CLADP by Cambridge Control LtD. UK; or an integrated system the MATRIXx by Integrated Systems Inc. USA), and have been developed by universities (e.g. IMPACT by the ETH Zürich, Switzerland). The typical algorithms to be found in the identification part of a CACSD software suite would be for:

— random and deterministic signal generation;
— derivation of mean, standard deviation, etc.;
— elimination of trends in data;
— spectral analysis using fast Fourier transform (FFT);
— spectral window generation;
— data filtering;
— filter design;
— polynomial manipulation;
— auto- and cross-correlation;
— state space maximum likelihood routines;
— least square routine;
— auto regressive moving average routine, etc.

Typical design tools in the software packages are:

— continuous and discrete Bode and Nichols frequency response methods;
— root loci and Nyquist diagram plotting;
— time domain responses (step, ramp, impulse);
— pole placement design (SISO);

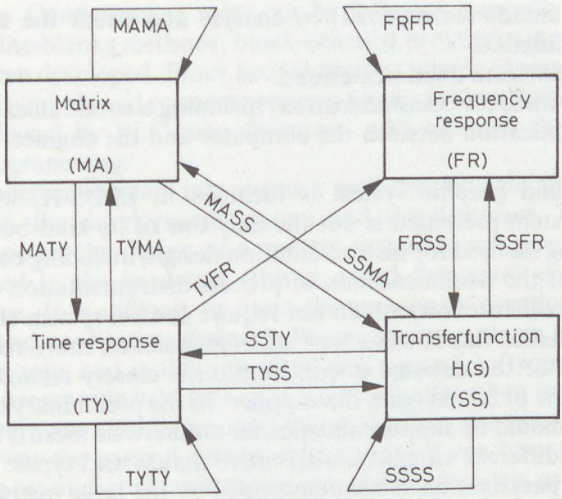


Fig. 3.14 Structure of the TRIP program system [3.21]

— eigenstructure assignment (MIMO);
— generalized complex frequency response (MIMO);
— controllability assessment;
— observability assessment.

Conversion routines are necessary because the description of different units of a large system may be available in different forms. It may thus be necessary to convert transfer function to state space, or time response to frequency response. Fig. 3.14 shows the structure of the TRIP system (Transformation and Identification Package), which can handle four types of description [3.21].

### 3.4.2 COMPUTER AIDED DESIGN OF INSTRUMENTATION

Control system analysis and synthesis is only one part of instrumentation design work. The specification of hardware and software and producing documentation is necessary, too, and can be supported by computer.

A specification and design support system, EPOS, has been developed at Stuttgart University. This is a software tool for engineers designing, maintaining and operating real time control systems. It is compatible with the real time programming language PEARL.

EPOS consists of the following components:

— EPOS-R (R stands for requirements) to describe control system requirements as well as the design of automation procedures;
— EPOS-S (S stands for specification) to describe the operational design, i.e. a formal description of the object and sub-objects;

— EPOS-A (A stands for analysis) to analyse and check the specified system, including simulation;
— EPOS-D to generate documentation;
— EPOS-C (C stands for communication) including a communication language to allow communication between the computer and the engineer using EPOS.

A text editing and graphic system is included in EPOS-R, with interface to EPOS-S. The system presented is not the only one of its kind but well illustrates a problem solving method for instrumentation design, including computer control.

A large part of the documentation of process instrumentation consists of lists, descriptions and other text which do not require control system calculation methods, but CAD makes this routine type of work quicker, more reliable and more effective. Design of the detailed documentation is closely related to the type of equipment, i.e. it is obtained from the supplier. In the preliminary design phase the documentation should be supplier-independent, otherwise there is no possibility to choose between different suppliers, alternative makes and types. The problem is that most CAD packages have been developed by the large instrument manufacturing companies (e.g. RUPLAN by AEG, etc.) and few are really manufacturer independent [3.6], [3.7]. To help the designer's work, computer-based information sources, on-line data banks are available. International networks and national services offer information in all sectors of science and industry. Bibliographic information can help the instrumentation designer to discover previous experiences, case studies of problems similar to his specific design task or to obtain information on newly developed hardware and software. Instrument data are also available, in the UK British Telecom operates the INDEXi databank. In INDEXi the instrument manufacturers enter their catalogue data and price information, which are periodically renewed. With an up-to-date, on-line information system the designer is freed from time-consuming data collection and retrieval.

A great part of modern instrumentation and control systems including process and plant management systems involve the use of microprocessors and computers, the CAD system has to include configuration and programming of such devices or subsystems. This again poses the problem of supplier independence because in spite of great standardization efforts, each PLC supplier, each DCS vendor and each computer manufacturer has its own programming language, configuration rules and communication protocols. A brief survey is given on digital control and instrumentation system design.

### 3.4.3 DESIGN OF COMPUTER CONTROL

The task of designing a computer control system is not unambiguous. Computer or instrument manufacturers, engineering companies and control engineering departments of chemical plants have different goals, views, abilities and personnel. The use of a central minicomputer, microcomputers or totally distributed digital control systems pose different problems and solutions. It is not easy to draw a line between process control system design and computer program design.

System suppliers have already developed or purchased real time process control packages and usually configuration is the only work which has to be done by the

system designer. Configuration rules can be followed manually or by the CAD system. Fill-in-the-blanks methods, block-oriented programming guides and other systems have been developed. Block programming systems generally use the instrument flowsheet symbols and connect program blocks to the schemes. This is similar to a trend followed by PLC manufacturers, who adapted the ladder diagram notation to programming.

The use of microprocessors introduces a new element into the documentation and design, viz. the development system and the firmware. This means that, without a computer, the design of a control system is not possible. The control program is fixed in the hardware (this is called firmware) with the aid of an electronic device. It is difficult to draw the previously mentioned line between manufacturer and application designer. Programming systems provide for CAD, implementation tests and evaluation of process control software.

The control program is held first on a host computer, then on a twin computer system (one computer simulating and one controlling the plant) acting as a test bench. In this way the control system and equipment can be examined. Software is an essential part of digital control systems and its price is a growing percentage of the total expenditure. The documentation, quality control and diagnosis of the control software is not always adequately regulated. Great care should be taken to ascertain the effectiveness and warranties of the software. The control system being itself a computer, there is a possibility to communicate between the CAD systems computer and the control systems computer (microprocessor system). The final documentation of the installed program can be edited by the control system itself. Some CACSD packages are equipped with this facility [3.7]. It has to be mentioned finally that knowledge-based expert systems, using artificial intelligence (AI) are available to aid control system design [10.9].

Some further aspects of computer control software will be treated in Chapter 10.

## REFERENCES


[3.1] Allen, D. J.: *Ind. Eng. Chem. Fundam.* 23 (2), (1984) 175.
[3.2] Andow, P. K.: *Comput. Chem. Eng.* 4 (1980) 143.
[3.3] Best, R.: *Process Autom.* (1) (1982) 13.
[3.4] Browning, R. L.: Loss Prevention. *CEP Techn. Manual,* Vol. 12., *AIChE,* New York 1979.
[3.5] Dietsch, H., W. Schneeweiss: *Process Autom.* (1) (1982) 32.
[3.6] Engel, G. F. M.: *Meas. Control* 22 (1989) 249.
[3.7] Förster, T. and co-workers: *Automatisierungstechn. Prax.* 30 (8), (1988) 365.
[3.8] Govind, R., G. J. Powers: *AIChE J.* 28 (1), (1982) 60.
[3.9] Hammond, P. H.: *Meas. Control* 19 (106) 1986–87/277.
[3.10] Himmelblau, D. H.: *Fault Detection and Diagnosis in Chemical and Petrochemical Processes.* Elsevier, Amsterdam 1978.
[3.11] Isermann, R.: *Automatica* 20 (1984) 38.
[3.12] Jamshidi, M., C. J. Herget (Eds): *Advances in Computer Aided Control Systems Engineering.* Elsevier, Amsterdam 1985.
[3.13] *Catalog of algorithmic modules for general indrustrial use* (in Russian). M. CNIITEI priborosztroennaya, Moscow 1980.
[3.14] Kuo, B. C.: *Automatic Control Systems.* Prentice-Hall, Englewood-Cliffs 1987. 5th ed.
[3.15] Lauber, R.: *6th IFAC/IFIP Conf. on Digital Comp. Appl. to Process Control,* Düsseldorf, 1980, p. 25.

[3.16] *Manual for the Preparation of Industrial Feasibility Studies*. United Nations, New York 1978.
[3.17] McCord, B. E.: *Designing Pneumatic Control Circuits*. Marcel Dekker, New York 1984.
[3.18] Mizsey, P., H. Hajdu, P. Földes: *Hydrocarbon Proc.* 66 (2), (1987) 53.
[3.19] Murrill P. W.: *Automatic Control of Processes*. International Textbook Co. Scranton Pa. 1967.
[3.20] Nagy, I.: *DECHEMA* Vol. 34. Verlag Chemie, Weinheim 1959, p. 263.
[3.21] Rimwall, H.: CACSD *Software Catalogue ELCS*. ETH Zürich.
[3.22] Rimwall, H.: *Trans. Inst. Measurement and Control.* 9 (2), (1987) 64.
[3.23] Rosenoff, H. P.: *Control Eng.* 28 (3), (1981) 73.
[3.24] Samal, E.: *Grundriss der praktischen Regelungstechnik*. Oldenbourg, Munich 1983. 13th ed.

# PART II

# AUTOMATIC CONTROL OF UNIT OPERATIONS AND PROCESSES

*Applied instrumentation might be classified into as many groups as there are fields of application. The chemical industry has many branches and processes, all needing instrumentation. To deal with all these processes would result in a great deal of description, with many repetitions. The present author has found that just as processes can be divided into unit operations, their control can be built up from unit operation control schemes. The second part of the book is therefore devoted to the automatic control of unit operations.*

*Independently of the author, Nisenfeld [4.17] came to similar conclusion and emphasised that the unit operation control blocks can be used to develop control systems which provide maximum benefits in the shortest times at reasonable costs. When unit operations are employed as the essential modules for control systems, attention can be focussed on relatively simple phenomena. Because of the interaction of unit operations, the control objectives must not only be suitable for individual units, but must also yield satisfactory performance when integrated into plant-wide systems. The unit operation building block approach offers a means for stabilising operation at the first level of control, then for implementing optimal operating strategies further up the control hierarchy.*

*Most texts on automatic control group instruments and control systems according to parameters, e.g. level, temperature or pressure. The following chapters are grouped according to unit operations, but within these groups the measurement and control of the most characteristic parameters is presented.*

*The strategy for synthesis of control structures, described in Chapter 3, represents a problem-solving method which should be applied to unit operations control. Numerical evaluation of the multivariable control system can be made by the relative gain array method. Besides these design aids experience, deep knowledge of system behaviour and, last but not least, intuition are necessary.*

CHAPTER 4

# HYDRO–MECHANICAL UNIT OPERATIONS

## 4.1 INSTRUMENTATION OF STORAGE

The quantity of stored material is a function of the inflow and outflow. Fundamentally the mass balance equation for this case is

$$\dot{m}_{in}(t)-\dot{m}_{out}(t)=\frac{d}{dt}[V(t)\varrho(t)] \tag{4–1}$$

or in a simpler notation

$$B_i(t)-B_0(t)=\frac{d}{dt}W(t). \tag{4–2}$$

where $\dot{m}$ — mass flow $\left(\frac{dm}{dt}\right)$;

$V$ — volume;
$\varrho$ — density;
$B_i$ and $B_0$ — inflow and outflow, respectively;
$W$ — stored mass.

The quantity of material in store at time $\tau$ can be obtained by integrating the above equation

$$W_\tau=\int_0^\tau [B_i(t)-B_0(t)]dt+W(0). \tag{4–3}$$

Storage has integrating character, which means that the controlled system can be simulated by an integral block.

The fluid storage tank mass content can be calculated in a tank with constant cross-section

$$W=A\cdot\varrho\cdot h, \tag{4–4}$$

where $A$ is the area of cross-section,
$\varrho$ is fluid density,
$h$ is fluid height.

Substituting Eq. (4–4) into Eq. (4–3) and rearranging, we get

$$h(t)=\frac{1}{A\cdot\varrho}\int_0^\tau [B_i(t)-B_0(t)]dt+h(0). \tag{4–5}$$

This is why liquid level measurement and control is the most important parameter in liquid (or fluid, granular solid) material storage. For storing gas under pressure, the characteristic parameter of the stored material is its pressure.

### 4.1.1 LIQUID LEVEL MEASUREMENT AND CONTROL

Two classes of liquid level measuring devices can be distinguished: instruments of average accuracy (0.5–1.5%) and high-precision ($\simeq 0.01\%$) instruments. The range of measurement of the first group is usually small (0–2 m) that of the second group large (10 to 15 m). The most important liquid level sensing methods are shown in Table 4.1. For level signalling and alarm, level switches are applied, and these can also be used for on–off level control.

The simplest and cheapest level control method is the overflow with a pipe or weir. This method has one basic constraint, in that it can be applied in atmospheric conditions only if final outflow is considered.

A very old and well-known continuous level controller is the floating ball valve, one of the few regulators known in antiquity. The modern version is the displacement type level transmitter connected to a pneumatic or electronic controller.

The *displacement type level transmitter* is usually installed in an outside float chamber, which is connected by pipes and valves to the vessel, tank or other equipment. The dynamic behaviour of the liquid can be analysed according to Fig. 4.1 by considering the balance of forces

— due to pressure
— due to liquid level difference
— due to fluid friction, and
— the mass of liquid in the measuring (float) chamber, connecting pipe × acceleration of the liquid.

It can be shown that a second-order differential equation describes the behaviour. Damping due to fluid friction and viscosity is difficult to calculate theoretically, therefore it is usually determined by experiment. A displacer, floating in a 100 mm diameter chamber, connected to a 50 mm diameter and 500 mm-long pipe, has a damping coefficient for water of $\zeta = 0.058$ and for oil it is $\zeta = 0.33$.

The dynamic behaviour of the level measurement depends not only on the fluid dynamics but also on the mechanical and electrical parts of the transmitter (e.g. torsion tube, displaced mass, friction, etc.). These are calculated and measured by the manufacturer, and the application engineer should use the data supplied by the manufacturer.

Liquid level control methods depend on the control goal, on fluid flow manipulation, on tank pressure and on self regulation. The control objectives might be

(*i*) constant level control,
(*ii*) constant outflow (averaging) control, or
(*iii*) constant residence time control.

Table 4.1. Principal liquid level measuring methods

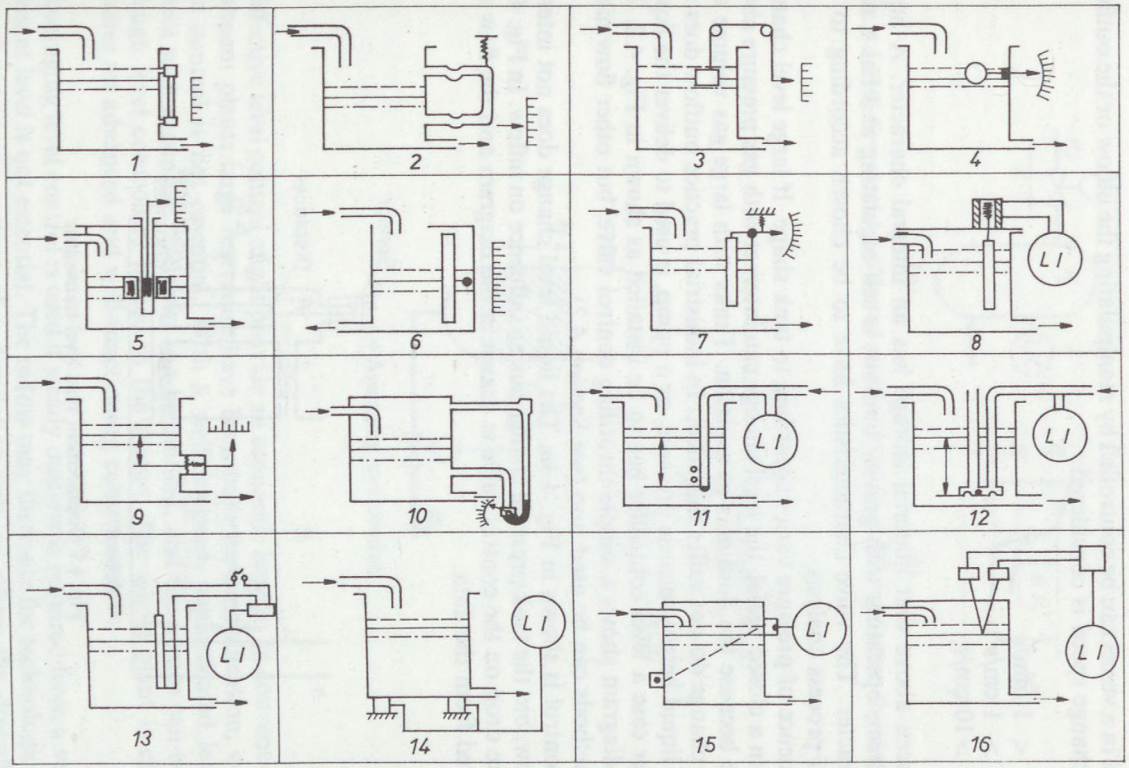


*1* glass level gauge; *2* weighing a secondary vessel; *3* float; *4* tilting float; *5* magnetic float and follower; *6* float in secondary vessel with magnetic or optical reading; *7* displacement level transmitter (pneumatic); *8* displacement level transmitter with induction coil; *9* membrane pressure sensor; *10* pressure difference measurement; *11* bubbling level measurement; *12* pneumatic level probe; *13* electrical resistance measurement; *14* tank weight measurement; *15* radioactive level measurement; *16* ultrasonic level measurement

The level in a vessel can be controlled by manipulating the inflow or the outflow. The level change speed is considered

low if < 1 mm/s
medium if > 1 cm/s
high if > 10 cm/s.

We have seen above that material storage has an integral character. A liquid storage system, operating with gravity outflow, is self-regulating and has a non-linear character. The valve characteristics have to be chosen according to the methods of process analysis.

The influence of pressure varies according to tank shape. If large level changes take place in a closed vessel, the level change can interact with gas pressure above the surface because the fluid acts as a piston. Tanks with large gas volume and small level change do not suffer this effect. In industrial practice outflow does not depend on liquid height because pressure, or a pump, is used to deliver the liquid. In the latter case a level controller has to be installed as shown in Fig. 4.2. The schematic diagram shows a simple throttling control valve, but other flow manipulating methods can be used, too (see Section 4.2).

Inflow control is shown in Fig. 4.3*a*. The liquid level change does not interact with the flow, but the tank pressure change has an influence on inflow. In Fig. 4.3*b* the pressure drop on the control valve is drawn in the diagram and the flow can be calculated from the data.

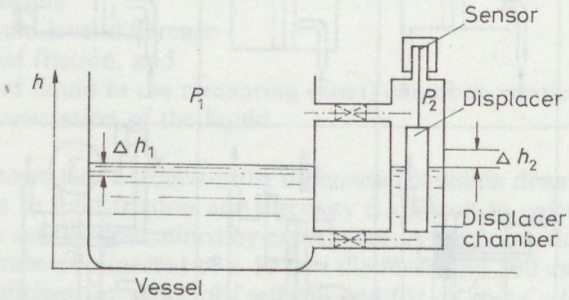


Fig. 4.1 Displacement type level transmitter

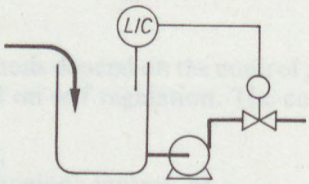


Fig. 4.2 Outflow control



MAGYAR TUDOMÁNYOS AKADÉMIA KÖNYVTÁRA

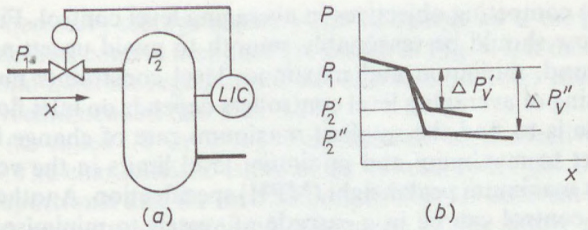


Fig. 4.3 Feed flow control. (*a*) control scheme; (*b*) pressure difference across the control valve

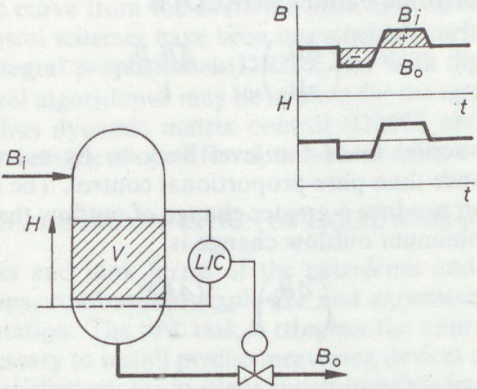


Fig. 4.4 Averaging level control

Effective level control might provide an economic benefit. In conventional waste treatment plants large reservoirs have been built for neutralization, where exact level control is not essential. With a well-designed, sophisticated level control system such expensive reservoirs can be omitted, and the pumps can be operated through level controllers placed in the flumes. The whole plant is cheaper but requires an advanced and well-functioning control system.

Averaging level control is used if steady outflow is required from a vessel where constant level is not essential. The inflow may fluctuate for technological reasons, as in the stripping section of a distillation column where the downflow to the bottom or reboiler changes with feed composition. The bottom outflow has to be maintained as constant as possible because it is the feed stream to a second distillation column. Inflow $B_i$ is fluctuating, which can be expressed as the sum of an average inflow $B_{ia}$ and a perturbation $\Delta B_i$. With standard set point control, the output of the level controller will change the outflow $B_0$ with the same perturbation, but a little later in time, due to the phase lag. Using averaging level control and with a suitable capacity, the outflow can be maintained at a relatively constant rate equivalent to $B_{ia}$. The control principle is illustrated in Fig. 4.4.

There are two competing objectives in averaging level control. First, the rate of change of outflow should be reasonably smooth to avoid upsetting downstream equipment. Second, minimum and maximum level constraints must not be exceeded. The tuning of averaging level controllers depends on inlet flow disturbance and its objective is to find the smallest maximum rate of change in the outflow (MRCO) subject to maximum and minimum level limits in the vessel not being exceeded, with a maximum peak height (MPH) specification. Another objective for averaging level control can be in a cascade of vessels to minimise outflow overshoot, since this peak can be amplified as it moves down the cascade. The conventional approach to this problem is the use of averaging controllers with proportional and integral modes. It can be shown that with proportional control the maximum rate of change in the outflow (MRCO) is

$$\left(\frac{\mathrm{d}B_0}{\mathrm{d}t}\right)_{\max} = \frac{\Delta B_i B_i}{V}. \tag{4–6}$$

Integral control action leads the level back to its average value and gives smoother performance than pure proportional control. The PI controller has the drawback that it can produce a greater change of outflow than the inflow change. Theoretically the minimum outflow change is

$$\left(\frac{\mathrm{d}B_0}{\mathrm{d}t}\right)_{m_{\mathrm{in}}} = \frac{(\Delta B_i)^2}{V}. \tag{4–7}$$

The outflow is changed in such a way that the two streams should be equal when the level constraint is attained. For practical reasons a PI controller is recommended if

$$\frac{\Delta B_i}{B_i} < 0.5.$$

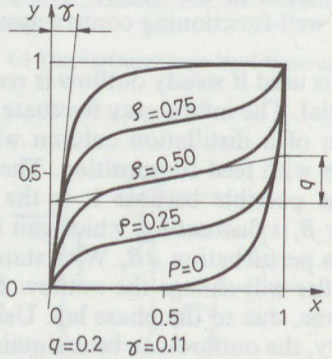


Fig. 4.5 Characteristics of a nonlinear (*N*) controller

The smallest necessary storage capacity can be calculated if the perturbations are known. Simple level control is applied (as shown in Fig. 4.4) if there are no pressure fluctuations and inherent regulation is not effective. In other cases a flow cascade controller is recommended (see Fig. 6.23).

Nonlinear (so-called 'N' or 'NL') controllers are used effectively for averaging level control. The characteristic curve of an 'N' controller has three sections: the rising, the proportional and the final section. In Fig. 4.5 different curves are drawn with identical proportional sections. The slope of the linear part can also be changed. The greatest equalising effect can be achieved if the liquid level is in the middle, in the steady state (i.e. $V_s = 0.5\ V$). Connection of an integral control element to the 'N' controller, wich changes its parameter $\rho$ and selects the appropriate characteristic curve from the available ones, is possible, too.

Several other control schemes have been investigated, such as proportional-lag (PL), dual-range integral proportional (DRIP), etc. With digital control systems new advanced control algorithmus may be applied for the optimisation of averaging level control, thus dynamic matrix control (DMC) and optimal predictive control (OPC) have been developed for optimal averaging control [4.11].

### 4.1.2 INSTRUMENTATION OF LIQUID STORAGE

The storage tanks and tank farms of the petroleum and chemical industries containing dangerous, combustible, explosive and expensive fluids require well-designed instrumentation. The first task is to select the appropriate instrumentation goals. Is it necessary to install precise measuring devices or are instruments of medium accuracy satisfactory for in-plant supervision? Safety instrumentation in the case of toxic materials is a primary task. The instrumentation of feed tank is sketched in Fig. 4.6. It is required that this plant item operates continuously and hence reliable and safe instrumentation is required. A constant liquid level is maintained by manipulating the inflow by a level controller. Level measurement is made by differential pressure measurement, the DP transmitter being connected via a valve manifold. The liquid is a hydrocarbon, which means that explosion proof equipment is required. This can be satisfied by a pneumatic transmitter and valve actuator, or by an intrinsically safe transmitter and pneumatic or explosion proof electric actuator.

Alarm switches are connected to the transmitter output or placed in the control instrument. For safety reasons, explosion-proof direct-acting level switches are installed to ensure alarm signalling in the case of a control system failure. The position of the connecting flanges has to ensure enough time for the operator or automatic shutdown system to take security measures.

On the feed tank, level gauges are mounted for supervision and for transmitter verification. A pressure gauge and safety relief valve are installed to complete the instrumentation and conform to standards.

In the petroleum and petrochemical industries large tanks (10–15 m high, 20–30 m diameter) are used to store raw materials and products. A group of tanks with pumps, pipelines and valves represents a separate plant, usually called a *tank farm,* and the instrumentation of such a tank farm is an important part of the plant

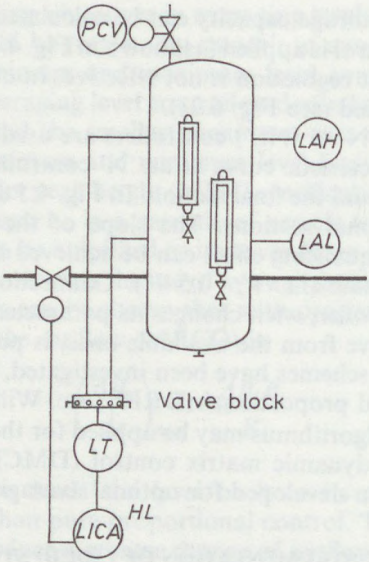


Fig. 4.6 Feed tank instrumentation scheme

instrumentation and control system. High precision level gauges detect levels in a tank 15 m high with an error of $\pm 1$ to 1.5 mm.* This means an accuracy of 0.01%. The servo-operated level transmitter has a flat displacer to minimize liquid density influence. The displacer is suspended by a cable wound on a measuring drum. The drum shaft is coupled to a weighing balance and servo system.

The tank may be constructed with a fixed or floating roof, or it may be of spherical form (for high pressure). A different instrument type is required for each tank type. When the liquid level fluctuates, a wave integration system, faster than the response speed of the instrument, ensures an average value indication. Some instrument types have an option for a hoisting device. A special sensor is available to detect the water level near the bottom of the tank.

Hydrostatic level measurement was considered unsuitable for tank inventory control, but with the new electronic pressure sensors the old principle has once again been applied. The HTG (Hydrostatic Tank Gauge) system of Foxboro (USA) measures level and density by high precision pressure sensors and temperature with a resistance thermometer (RTD), as shown in Fig. 4.7. Pressure sensor PT-1 is mounted near the bottom for head pressure measurement, PT-2 is higher (e.g. 2 m) for the density measurement and PT-3 at the top, is used only when the tank is not vented to atmosphere. Temperature and pressure signals are processed in the locally mounted microprocessor-based tank processor unit. The

* ENRAF Co. calculates accuracy by the following equation: $\Delta H = \pm(0.5 + 0.11\ H)$ mm, where $H$ is tank height in meters.

calculations are performed in this unit and the data base resides here, including tank geometry (strapping tables) for each tank. A digital output signal communicates the information to the control room for display to the operators. The tank processor unit can be remotely programmed. The legal acceptance of this method by competent institutions is under way. Installation and maintenance costs are lower than that of the electro-mechanical devices [4.3]. Radar type level detectors are also available.

Large tank farms with many tanks need a centralised control room with a full instrumentation and control desk. Level measurement in itself is not sufficient for accurate quantity determination, because temperature change in the liquid causes

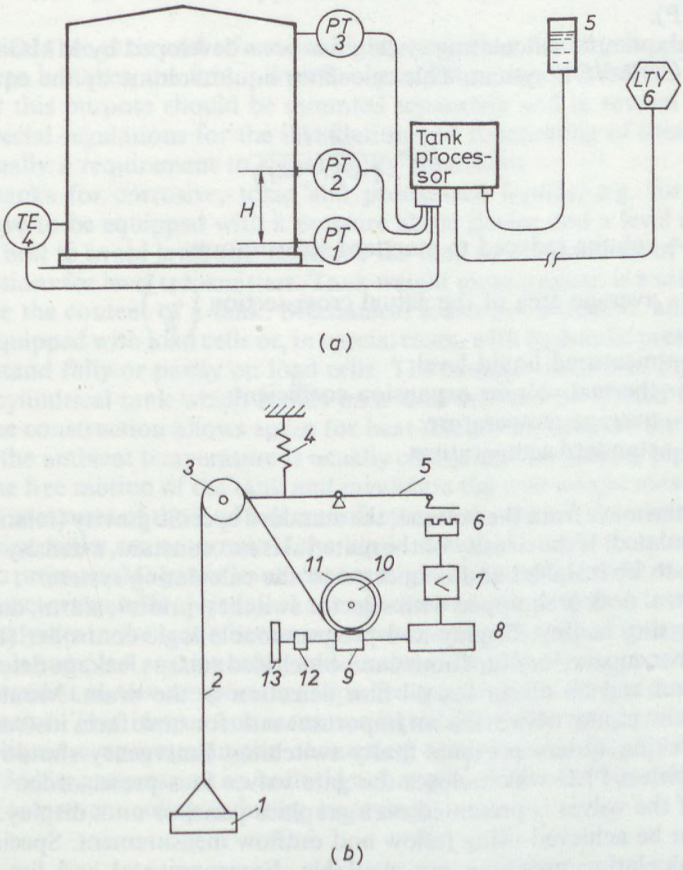


Fig. 4.7 Tank gauging systems. (*a*) Hydrostatic system (Foxboro). *1, 2, 3* pressure sensors with direct frequency output; *4* resistance thermometer; *5* handheld terminal with fiber optic link; *6* computer with process interface. (*b*) Mechanical system (MMG-AM). *1* level sensing element; *2* measuring cable; *3* roller; *4* spring; *5* lever; *6* differential transformer; *7* amplifier; *8* reversing motor; *9* worm gear; *10* gear; *11* measuring drum; *12* display and transmitter; *13* Hi-Lo contacts

volumetric expansion, which results in a level change. Hydrocarbons have a thermal volumetric expansion coefficient of about $10^{-3}$ $C^{-1}$ (i.e. 1% change per 10°C).

Another source of measurement error is the shape of the tank. Large diameter, welded steel tanks are not manufactured as exact cylinders or spheres and have to be calibrated after construction, before the first filling. Each height has an actual cross-section. Average cross-sections are calculated for predetermined height sections (e.g. 1 m).

The average temperature can be measured by a series of sensors connected to a float. Special sensors are always floated in the middle of the liquid (MIDTEMP from ENRAF). For tanks higher than 3 m, three temperature sensors have to be used according to ASTM regulations. The lowest is 90 cm above bottom, the second is always at the middle level, and the upper one is 90 cm below the surface (TRITEMP).

A special quantity-calculating system has been developed by MMG-AM (Hungary), the COR-VOL system. This calculates liquid volume by the equation

$$V_0 = \frac{A \cdot H}{1+\beta(t_a - t_s)}, \tag{4–8}$$

where $V_0$ — volume reduced to standard temperature;

$A$ — average area of the actual cross-section $\left(\frac{V}{h}\right)$;

$H$ — measured liquid level;

$\beta$ — thermal volume expansion coefficient;

$t_a$ — average temperature;

$t_s$ — standard temperature.

To obtain the mass from the volume, the standard specific gravity (relative density) can be calculated. If the density of the material is not constant, a density-measuring sensor has to be installed and connected to the calculating system.

The control desk is equipped with selector switches, printer, alarm, data storage, data processing facility, display and programmable logic controller (PLC) if required. Other supervisory functions can be included such as leakage detection, tank tilt detection and an alarm for oil film detection in the drain. Monitoring and control of the piping network is an important task for tank farm instrumentation. An interlocking system prevents faulty switching. Emergency shutdown can be achieved with a PLC which closes the gate valves in a preset order. The actual position of the valves is presented on a graphics panel or on a display. Inventory control can be achieved using inflow and outflow measurement. Special material balance calculating programs are available. Environmental and fire protection instrumentation is an inseparable part of tank farm control systems.

The instrumentation of tanks filled with dangerous fluids requires special attention. Hydrocarbons are flammable, and when mixed with air they are explosive.

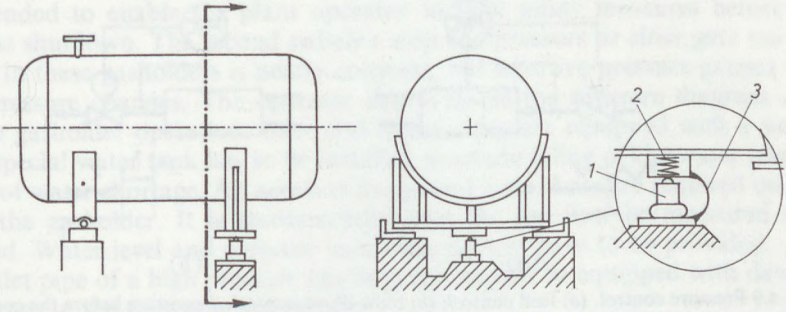


Fig. 4.8 Tank weighing system. *1* load cell; *2* overload protection; *3* copper wire earthing

Many chemicals are toxic and others are highly corrosive. Among the precautions which have to be taken the first is overflow protection, i.e. prevention. The level switches for this purpose should be mounted separately and in several countries there are special regulations for the installation and functioning of these devices. There is usually a requirement to signal faulty conditions.

Storage tanks for corrosive, toxic and pressurised liquids, e.g. for liquefied chlorine, have to be equipped with a pressure alarm device and a level indicating device. It is best to avoid level sensors inside the tank or the presence of too many pipe connections for level transmitters. Tank weight measurement is a safe method to determine the content of a tank. Mechanical scales are outdated, and modern plants are equipped with load cells or, in special cases, with hydraulic pressure cells. The tanks stand fully or partly on load cells. The example shown in Fig. 4.8 is a horizontal cylindrical tank which stands on a load cell and on a fixed but tilting support. The construction allows space for heat dilatation, because the fluids are cooled and the ambient temperature is usually changing. Connecting pipes should not affect the free motion of the tank and invalidate the true weight measurement. The security measures of the load cell manufacturers should be taken into account. Large chlorine tanks are economic if the liquid is stored at low temperature and atmospheric pressure. Magnetic level sensors might be installed inside and radioactive level detectors outside the tank. Leakage control and detection is effected by using gas analysers in the space between the tank wall and the protecting concrete bunker. Air is sampled continuously and analysed for chlorine gas content. For level measurement in low temperature liquefied gas tanks, a simple device is the Hampson meter. This instrument measures liquid level through pressure differences. The liquid evaporates in the connecting tubes and so the dp measuring device is loaded by gas pressure on both sides. Large tanks should be equipped with snap valves to prevent collapse during emptying.

### 4.1.3 INSTRUMENTATION OF GAS STORAGE

Gasholder instrumentation depends on the gas storage method. Gas can be stored in fixed volume vessels under elevated pressure or in variable volume gasholders under nearly atmospheric pressure. Liquefied gases have to be treated

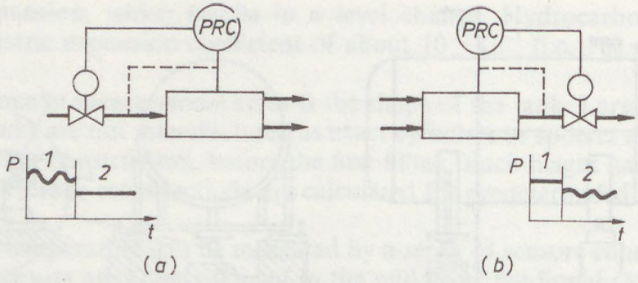


Fig. 4.9 Pressure control. (*a*) feed control; (*b*) blow-down control. *1* pressure before the control valve; *2* pressure after the control valve

like fluids, as we have seen previously. In fixed volume storage gas pressure is a measure of the stored mass, and consequently pressure measurement is required.

Pressure measurement and control of vessels attracted the attention of control engineers from the early days of process control history because of its importance and frequent application. Two principles of pressure control can be applied

(*i*) valve outlet pressure control (pressure reducer);
(*ii*) valve inlet pressure control (safety or blow-down valve).

Pressure reduction is shown in Fig. 4.9*a*, where the gas supply is manipulated. Pressure control of this type is possible only if the feed stream has a higher pressure than the desired vessel pressure and if there is a sufficient supply to satisfy the demand. In Fig. 4.9*b* the vessel pressure is controlled by blowing down the excess quantity. In this case the pressure is constant upstream of the control valve. Pressure changes are shown in both diagrams with small insets. The sensing point of the pressure controller can be placed near to the valve. This position is indicated by a dotted line.

Gasholder instrumentation is generally standardised in most industries. Low pressure gasholders change their inner volume by the use of a moving roof, bell or telescope. The gas content of the gasholder is to be indicated by a position indicator. The old and simple solution is to fix a cable to the moving part and rotate a pointer over a dial with the aid of a balancing weight. The drawback of this mechanical device is its sensitivity to ambient influences such as weather, dirt and corrosion. If an electrical transmitter is fastened to the rotating shaft (e.g. a selsyn) telemetering is possible.

Position can be transformed to pressure difference if a small vessel containing liquid is fastened to the moving part and is connected by a flexible tube to a pressure transmitter. The hydrostatic head exerted by the liquid is proportional to the gasholder volume. High and low position alarms are necessary to avoid damage to the tank. Corrosion resistant, and in most cases explosion proof, end switches are required. On large gasholders, two high and two low alarm switches are

recommended to enable the plant operator to take safety measures before an automatic shutdown. The second switches stop compressors or close gate valves. Pressure in these gasholders is nearly constant, but sensitive pressure gauges can record pressure changes. The operator can evaluate the pressure diagram and supervise gasholder operation. Inlet and outlet pipes are equipped with a water trap. A special water tank has to be installed to secure filling of the water trap in the case of water shortage. An aeration flange and a manhole are required on the roof of the gasholder. It is recommended that the gas flow be measured and integrated. Water level and pressure indicating devices have to be provided.

The inlet pipe of a high pressure gas reservoir should be equipped with devices downstream in the following sequence:

1. gas filter (strainer);
2. safety shutdown valve, to stop feed if inside pressure exceeds its normal limit by 5%;
3. pressure controller, to reduce feed stream pressure from line pressure to tank pressure;
4. check valve, to prevent backflow of gas from tank to pipeline (optional);
5. restriction orifice, calculated for maximum feed flow;
   instruments connected to the gasholder;
6. pressure gauge with high alarm;
7. pressure recorder;
8. safety valve with blow-down tube to protect operating personnel and environment.

If a common control system with pressure constraint is provided for the gasholder, compressor and piping, devices No. 2, 3 and 5 can be omitted.

### 4.1.4 INSTRUMENTATION OF SILOS AND BUNKERS

Free flowing bulk solid materials are stored in bunkers or silos. Level detection of the solid filling is very important, to avoid overflow or running empty. The general principles of level measurement discussed in Section 1.3 (see Fig. 1.3) have to be taken into account first. A choice of solid level detectors is presented in Table 4.2.

Electrical capacitance type level detectors are very popular for materials whose dielectric constant is large enough and is relatively constant. Level detection of solids is not as easy as that of liquids, because the 'level' is not always a plane, and the inner pressure is not proportional to height so 'hydrostatic' pressure is not suited to level measurement. These restrictions mean that discrete point measurement is applied in most cases.

Hopper weight measurement is an adequate method for the determination of solid content. Because uniform distribution of the material is not ensured, the total weight has to be measured. Examples are shown in Fig. 4.10 which illustrates the construction principle and special security measures against horizontal forces. Although the expression 'free flowing' is used, powders and granulated solids usually do not flow freely and tend to build piles. Vibrators or loosening aeration

Table 4.2. Level measurement for bulk material silos

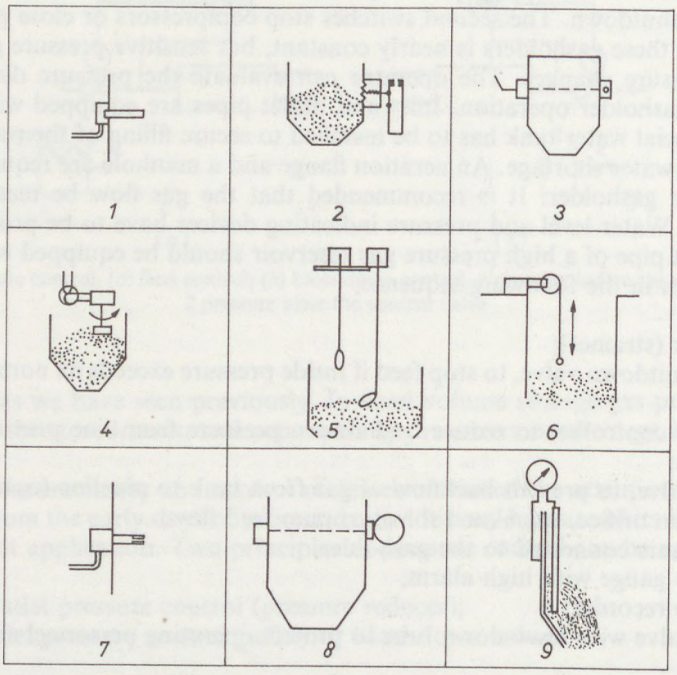


*1* capacitive sensor; *2* mechanical membrane sensor; *3* radioactive sensor; *4* rotating vane sensor; *5* suspension switch; *6* automatic level probe; *7* vibrating reed; *8* ultrasonic sensor; *9* electrical resistance measurement

is applied to aid in emptying the hopper. Level measuring instruments have to cope with these conditions. In the plastics industry storage silos are used to homogenize (equalise) charges. Level indication and high level alarms have to operate under this condition. Temperature measurement is required if the stored material is heat sensitive or spontaneously combustible. In ventilated silos where vapour condensation may occur inside, thermal conditions have to be monitored by adequate instrumentation. Ventilation generally depends on temperature difference and humidity.

### 4.1.5 WAREHOUSE AUTOMATION

Chemical and pharmaceutical products packed in boxes, crates, chests and cases are stored in warehouses inside or outside the plant perimeter. The optimal type of warehouse is calculated, and in many cases a high storage density warehouse is most economical. Fully automated and computerized warehouses are built in modern plants. The shelves are serviced by special machines, which can be manually controlled or fully automated. The machine moves on rails between the shelves, and a cabin moves up and down on a column. Vehicle speed is 1 to 3 m/s

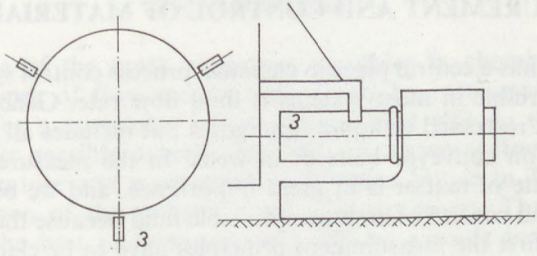


(a)

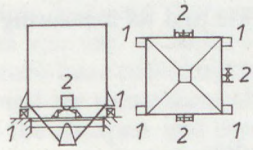


(b)

Fig. 4.10 Hoppers on load cells. (*a*) three point support; (*b*) four point support. *1* load cell; *2* constraints against horizontal forces; *3* load beam

and positioning speed of the cabin is 0.03 to 0.1 m/s. Below the cabin is a fork lift for operating and hoisting palettes.

Thus the servicing machine has three types of motion:

(*i*) rolling to and fro in the aisles;
(*ii*) hoisting cabin up and down,
(*iii*) fork lift manipulation.

If more than one aisle has to be served by one machine, a moving bench is installed to change aisles. The carriage drive, equipped with a place identification and position sensing system, forms the heart of the warehouse control system. A computer monitors all storage operations and administration of the input and output of goods. The computer receives a demand and calculates the shortest path to the shelf where the required goods are. The command gives the floor and row number and controls the vehicle and cabin movements. Positioning has to be accurate enough to enable fork lift operation. The electric motor drives should be flexible, variable speed motors. Several systems are used, from pole-changing (Dahlander) motors through DC motors to variable AC drives. Positioning sensors operate on various principles: optical, mechanical, capacitance, magnetic or induction. Warehouse automation is helped by using bar codes on the goods, when special reading devices can identify the product and send a message to the computer. Computer programs for stockkeeping and warehouse supervision are readily available.

## 4.2 MEASUREMENT AND CONTROL OF MATERIAL STREAMS

Flow control has a central place in chemical process control systems because the manipulated variable in most systems is fluid flow rate. Generally speaking the term flow is not restricted to liquids and gases but includes all material flow, e.g. solid materials on conveyor belts or in webs. In the measurement and control methods the state of matter is of great importance, and we begin with the flow measurement and control of an incompressible fluid because this is the simplest in the group, but first the measurement principles have to be clarified.

### 4.2.1 FLOW METERING

An exact definition of flow rate and its measuring units is necessary to avoid misunderstanding.

Mass flow

$$\frac{\mathrm{d}m}{\mathrm{d}t} = q_m \qquad \mathrm{kg/s}.$$

Volumetric flow

$$\frac{\mathrm{d}V}{\mathrm{d}t} = q_V \qquad \mathrm{m^3/s}.$$

In industrial practice weight flow and effective volumetric flow are sensed and thus correcting measurements and calculations are required. True mass flow meters working on Coriolis force (or other) measurement principles require external energy. Their greatest advantage is that phase change or solid particles do not interfere with the accuracy of measurement. Attention has to be paid to this aspect, because several manufacturers advertise 'mass flow meters' which are not really true mass flow measuring devices. For mass balance calculation and accounting purposes the total flow value is necessary, so flow integration is required

$$m = \int q_m \mathrm{d}t \qquad \mathrm{kg}, \tag{4–9}$$

or for volumetric flow

$$V = \int q_V \mathrm{d}t \qquad \mathrm{m^3}. \tag{4–10}$$

A distinction has to be made between actual volume and normal (standard) volume (e.g. $\mathrm{nm^3}$ or scf). The reference temperature and pressure have to be specified for each application, because there are different standards in many countries.

Flow computers are manufactured by several companies for computing temperature, pressure and density correction, for flow aggregating, alarm, energy flow and control. Flow computers usually contain all the equations necessary for volume, mass flow rate and compressibility factor calculations according to AGA, ANSI/API, ISO 5167 or other standards.

Flow being one of the most important variables in chemical engineering, many different types of flow meters are offered by instrument makers. The right flowmeter for a particular job is the one that will do the job satisfactorily at the lowest possible overall cost. There are several flowmeter selection guides in the literature and a compilation of these lists is in Table 4.3. Some explanation is given of the various types of instruments. The table will not indicate exactly the best of flowmeter but will be a guide to sorting out the wrong types and restricting one's choice to those that are nearly right for a definite application [4.4], [4.6], [4.7].

*Differential pressure* generating primary elements are the oldest and most frequently used devices for flow metering. Venturi tubes are applied mainly for liquids, when large pressure recovery is required or there are suspended solid particles in the stream. Venturis have considerable length and costs. Flow nozzles are of three standard types and are recommended if erosion may be a problem. A sharp-edged orifice plate is the cheapest and most widespread primary element, although it provides higher pressure loss than the previously mentioned Venturi tubes and nozzles. Modifications of the concentric orifice are the eccentric and segmental orifice plates to measure fluids which carry a small amount of solids (or gas), and the quadrant edge orifice plate for low Reynolds numbers or flow in the viscous region.

*Target* meters or impact (drag plate) devices are in fact 'negative' orifice plates, where the force exerted on a plate and lever system is measured.

*Variable area* flowmeters (rotameters) also work on the differential pressure measuring principle, but the pressure difference is sensed by the weight of a rotating sinker in a conical tube (mostly glass). This is a cheap and popular instrument for direct reading of small and medium pressure transparent liquid and gas flows. Installation constraints, limited accuracy and problems with fluids which are not clean are associated with the availability of high pressure and transmitting types. For large flow rates an orifice plate and bypass combination is used.

*Electromagnetic* (inductive) flowmeters are suited to measure electrically conducting liquids and slurries. Induction coils on the tube section are fed with AC or pulsed DC. The inner cross-section of the tube is free of inserts.

*Turbine* flowmeters (Potter meters) are widely used high precision instruments, and can be used to indicate instantaneous flow rate or integrated flow. The primary rotating device supplies a series of impulses which is often fed to a data logger or control computer. A clean fluid and a straight flow path are required.

*Positive displacement* instruments are available in great variety. High accuracy and easy calibration are their main advantages. Special installation rules have to be followed (see Section 11.5). Oval wheel meters are popular in Europe, while rotating vane meters are mostly used in America, but neither principle is accepted generally.

Several oscillatory type flowmeters are on the market. Table 4.3 includes the vortex shedding type, working on the principle of the Kármán vortex theory. A pitot tube (or Prandtl tube) measures the velocity at a single point, and flow rate is calculated from one or more point values and the pipe cross-section; averaging

Table 4.3. Flowmeter .

| *Key:* 1 Generally suitable<br>2 Worth considering<br>3 Unsuitable in most cases | Differential pressure meters | | | | | | | | |
|---|---|---|---|---|---|---|---|---|---|
| | Orifice plate | Nozzle | Venturi tube | Segmental plate | Elbow | Drag plate; Target | Variable area (*1*) | Pitot tube | Averaging Pitot |
| Clean liquids | 1 | 1 | 1 | | 1 | 2 | 1 | | |
| Suspensions | 3 | 3 | 2 | 1 | 1 | 1 | 3 | 3 | 3 |
| High viscosity liquids | 3 | 2 | 2 | 3 | | 2 | 2 | 3 | 3 |
| Low pressure gases | 1 | 1 | 1 | 3 | 2 | 3 | 1 | 1 | 1 |
| High pressure gases | 1 | 1 | 1 | 3 | 1 | 2 | 3(*1*) | 3 | 2 |
| Large pipe diameters | 1 | 2 | 1 | 2 | 1 | 3 | 3 | 3 | 1 |
| Very small flowrates | 2 | 3 | 3 | 3 | 3 | 3 | 1 | 3 | 3 |
| Installation constraints | s | s | s | h | | h | v | | |
| Pulsating low | 2 | 2 | 2 | 2 | 2 | 2 | 3 | 2 | 2 |
| Low pressure loss | 3 | 2 | 1 | 3 | 1 | 2 | 2 | 1 | 1 |
| Low initial cost | 1 | 2 | 3 | 1 | 1 | 3 | 1 | 1 | 2 |
| High temperature (> 120 °C) | 1 | 1 | 2 | 1 | 1 | 2 | 3(*1*) | 1 | 2 |
| Low temperature (< −10 °C) | 2 | 1 | 2 | 2 | 1 | 2 | 3 | | |
| Average accuracy (±%) | 3 | 2 | 2 | 3 | 3 | | 1.5 | | |
| Long maintenance interval | 1 | 1 | 1 | 1 | 1 | 2 | 1 | 1 | 1 |
| Flowrate range 1 to | 5 | 5 | 5 | 5 | 4 | 4 | 10 | 12 | 10 |
| Scale or signal character | s | s | s | s | s | s | l, e | s | s |

*Remarks:* (*1*) data valid for glass tubes, for metal tubes temperature limit ~ 400 °C, pressure limit ~ 100 bar; for large flows bypass is used
(*2*) there are several types which may differ slightly in performance
(*3*) e.g. Woltmann, Pelton, etc.
(*4*) only for electrically conductive liquids
(*5*) two types (transit-time and Doppler-effect) are used with different results if suspension and pulsating flow is considered
(*6*) vibrating types are considered only
(*7*) only for open channels

selection chart

| Different other types | | | | | | | | Mass meter | | Open channel | *Notation:* Applications not signed are usually possible but not economic, e.g. Reynolds number <2000 |
|---|---|---|---|---|---|---|---|---|---|---|---|
| Swirl (Drall) tube | Vortex shedding | Positive displacement (*2*) | Turbine | Wing type (*3*) | Inductive (*4*) | Ultrasonic (*5*) | Radioactive | Thermal | Coriolis (*6*) | Weirs (*7*) | |
| 2 | 2 | 2 | 1 | 1 | | 1 | 2 | 1 | 1 | 1 | |
| | 2 | 3 | 3 | 3 | 1 | 1 | 2 | 3 | 2 | 1 | |
| 3 | 2 | 1 | 2 | 2 | 2 | 1 | 2 | 2 | 2 | 3 | |
| 2 | 2 | 3 | 3 | 3 | 3 | 3 | 3 | | 3 | 3 | |
| 1 | 3 | 3 | 2 | 3 | 3 | 3 | | 2 | 2 | 3 | |
| 2 | | 3 | 2 | 3 | 2 | 1 | 2 | 2 | 3 | 1 | >1000 mm |
| 3 | 3 | 1 | 2 | 3 | 2 | 3 | | 3 | 2 | 3 | |
| | sh | | h | h | | | | | h/v | v | h = horizontal, v = vertical, s = straight pipe |
| 2 | 2 | 2 | 2 | 2 | 1 | 2 | | 1 | 1 | 2 | |
| 2 | 2 | 3 | 3 | 3 | 1 | 1 | 1 | 1 | 2 | 2 | |
| 2 | 2 | 3 | 3 | 2 | 3 | 3 | 3 | 3 | 3 | 1 | |
| 2 | 2 | 3 | 2 | 3 | 3 | 2 | 1 | 3 | 3 | 3 | |
| | 2 | 2 | 1 | 3 | 2 | 1 | 1 | 2 | 2 | 3 | |
| | 1 | 0.2 | 0.3 | 2 | 0.5 | 1.5 | | | 0.2 | | |
| 1 | 2 | 3 | 3 | 2 | 2 | 3 | 3 | 3 | 3 | 1 | |
| 15 | 15 | 20 | 15 | 12 | 100 | 20 | | 10 | 10 | 10 | |
| 1 | 1 | l, p | l, p | l, p | 1 | 1 | | e | 1 | $x^{3/2}$ | e = exponential, l = linear, p = pulse, s = square root |

tubes are also used. With increasing use of powerful electronic methods, such special devices as ultrasonic, radioactive, nuclear magnetic resonance, thermal and swirl flowmeters are gaining ground. True mass flowmeters working on the Coriolis force, vibratory and thermal principles are available.

A relatively new family of non-invasive flowmeters operates on the correlation measurement principle, shown in Fig. 4.11. Different types of sensors can be used, e.g. ultrasonic, microwave or thermal, which respond to the inhomogeneity in the cross-section of the pipe. The signals of the two sensors are converted and their

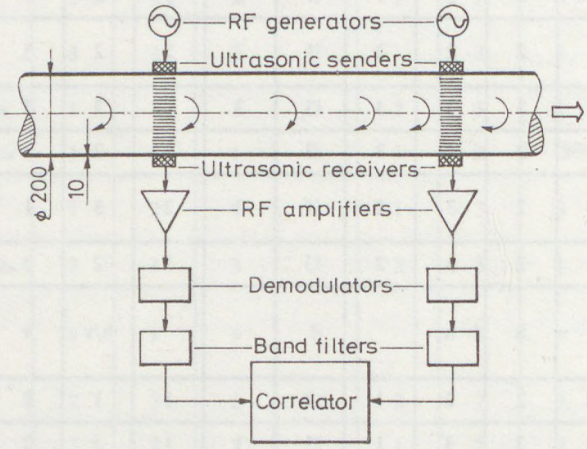


Fig. 4.11 Correlation type flowmeter (KFKI, Hungary)

correlation evaluated by the flowmeter [4.4]. The accuracy of flowmeters generally depends on the flow rate and viscosity. The error curve of a flowmeter should be investigated before selecting the proper one.

### *Legal aspects of flow measurement*

Flow and quantity measurement in a chemical or petroleum refining plant can serve for accounting purposes, for product price calculation and for reckoning the pay-off between two plant sections. If the final product measurement serves for invoicing, special regulations have to be followed.

Measurement and calibration rules for instruments used for selling and purchasing purposes are very important, especially in the petroleum industry. The first rules were issued by national organisations (e.g. API) and international organisations, initially OIML, later elaborated similar recommendations. Regulations also include installation and maintenance practices. Oil and gas pipelines have large capacity measuring stations which have to be designed and built according to such regulations. Calibration facilities are part of these systems (e.g. a prover loop).

Another group of delivery measuring facilities relates to the road tanker and railway tank waggon filling stations. These may be combined with weighing apparatus.

### 4.2.2 FLOW CONTROL OF LIQUIDS

Flow control has the distinction that the controlled variable and the manipulated variable are the same. This implies at first sight that flow control system design is easy, but there are several difficulties. The time constants of the controlled process and of the control system with the control valve are of a similar magnitude therefore an analysis of the stability of the control loop is recommended, in addition flow noise may cause difficulties.

The velocity of flow in a pipe depends on the pressure drop and the resistance of the section. Liquid flow is generated by gravity, a pump or a technological pressure difference. For instrumentation design the characteristics of the energy source are required. In the chemical and petroleum industries liquids are transported by pumps. Working characteristics of the pumps and pump drives are different and this implies different control strategies. The importance of energy conservation requires a careful selection from among the great variety of mechanical, hydraulic and electric variable speed drives.

#### *Control of centrifugal pumps*

The operation of centrifugal pumps is characterized by the head versus capacity curve. Brake power and efficiency are usually drawn on the same diagram. The intersection of the resistance curve and the pump characteristic gives the operating point of the pump, which determines the actual flow rate. If the process does not require this quantity, or if, due to pressure loss or change the flow rate may change, then flow control is required. The discharge of a centrifugal pump can be controlled by throttling, speed variation, recirculation or by guide vane regulation [4.5]. The principal schemes are shown in Fig. 4.12.

Flow throttling is the most simple and, for pumps which are not too large, also the cheapest method. As it is important to ensure that the net positive suction head (NPSH) available is above the NPSH required by the pump, throttling of the suction line is not allowed. The control valve, placed in the discharge pipe, increases the pressure loss, changes the operating point on the characteristic curve, and thus changes the flow rate. Throttling is energy consuming, both by transforming pressure loss to heat and by moving the operating point towards less efficient operation. Some processes require the pump to operate under low flow conditions. All centrifugal pumps have a minimum capacity at which they can operate satisfactorily. If run below this flow, the result may be overheating of the pump and reduction of bearing life. The way to resolve this problem is to install a minimum flow bypass valve. When the bypass valve is under automatic control it will open once minimum flow is reached. To avoid heating the inlet flow, minimum flow should always be taken back to the suction vessel, and not directly into the suction line of the pump. Controlling flow with recirculation (bypass) may require a

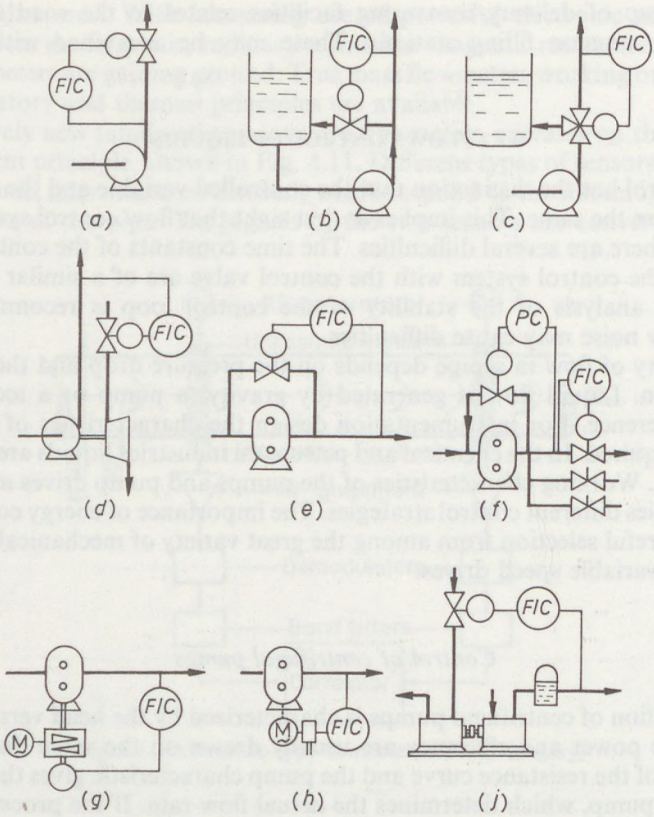


Fig. 4.12 Pump delivery control schemes. (*a*) throttling control; (*b*) recirculation; (*c*) recirculation through two-way valve; (*d*) steam turbine drive speed control; (*e*) gear pump control by recirculation; (*f*) constant pressure control with throttling flow control; (*g*) variable speed drive by mechanical or hydraulic device; (*h*) variable speed electric drives; (*j*) steam engine driven (Worthington) pump with flow control

two-way control valve to achieve exact flow control (Fig. 4.12*c*). Both control methods described above waste energy. The constant increase in the costs of energy are increasing the importance of energy saving control methods [4.2]. Pump characteristic curves change with pump speed. If the operating point on a curve related to speed $n_i$ is not satisfactory, a new operating point can be found by changing the pump speed to $n_j$. Flow control with the aid of speed control is possible with variable speed drives or with a variable gear. In Fig. 4.12*d* a steam turbine drives the pump, and the flow controller manipulates the steam inlet valve of the turbine to change the pump speed. Other methods are used in connection with positive displacement pumps. The set point of a steam turbine governor may also be changed by the flow controller. Guide vane regulation is used only with large pumps and requires special construction.

### *Control of positive displacement pumps*

In contrast to the centrifugal pumps, throttling control of a positive displacement pump is forbidden. The pump has a stiff characteristic, and throttling results in a high discharge pressure which can damage pipe, pump or valve, not to mention overloading the drive mechanism.

Positive displacement (pd) pumps are generally suited to low flow and high head applications. High viscosity liquids can readily be pumped, but they have to be clean because of the close clearances of the pumps and their valves. Several types of reciprocating and rotary pd pumps are used. Capacity control of a rotating gear pump is shown in Fig. 4.12*e*, where the flow controller manipulates the bypass valve and thus the recirculation. An energy-saving control mode is speed control, which is shown in Fig. 4.12*g*, with a mechanical, continuously variable speed drive. A variable speed electric drive is shown in Fig. 4.12*h* with a gear pump, but other pd pumps, such as piston or plunger pumps, can be driven in this way as well. If groups of pumps have to be controlled the individual electric motors are connected to a frequency controller, which manipulates the speeds of the drives and thus the flows. In synthetic fibre plants this method is applied for feed control. In cases when throttling of discharge pipe network cannot be avoided, as in the example shown in Fig. 4.12*f*, pressure control has to be installed. The three control valves are actuated by flow controllers, and the surplus delivered by the pump has to be recycled. A special type of reciprocating pump is the free-stroke or Worthington pump driven by a steam engine. This type of piston pump was very popular in oil refineries and small capacity boiler houses. Flow control is by throttling of the driving steam flow, shown in Fig. 4.12*j*. This principle is also applicable with other steam engines (e.g. Stirling motor, turbine). Attention has to be paid to the accumulator in the discharge pipe of the reciprocating pump, which is necessary to dampen pulsation of the flow. Flow metering of pulsating streams is difficult and its accuracy depends on the pulsation.

### *Metering pumps*

Flow control of liquids can be accomplished by means of metering pumps, which incorporate a measuring and a control element in a single unit. The piston type metering pump employs a plunger and delivers a fixed volume of liquid with each stroke. Special check valves prevent back flow and ensure accuracy. Flow rate is controlled by varying the stroke length through alteration of the eccentricity of the crankshaft, or by varying the number of strokes delivered in unit time. Plunger heads are usually exchangeable and can have heating jackets for transporting high melting point materials (e.g. sulphur).

For corrosive or toxic liquids, diaphragm pumps are used to avoid seals and packing. The membrane is pulsed by hydraulic fluid from a plunger pump. Most pump types are constructed so that two, three or more pump bodies can be mounted together to form one pump unit. The unit has one variable speed drive for all the pistons. Thus the delivered fluid volumes are proportional to each other. This arrangement is useful in ratio control and blending control. The blend ratio

is adjusted by the stroke length on each cylinder, and the total flow is controlled by the drive speed.

For batch processes, the charges can be metered by counting the strokes. A programmable controller is able to incorporate the control of metering pumps in the sequential control of a process. Metering pumps may be applied as final control elements in flow control loops. The number of strokes can be transmitted to the controller for supervision. The control range is considerable, up to 1 : 100, which is greater than the normal range of control valves. Accuracy is high, usually better than 0.5% in the normal operating range, and 0.1–0.2% can be reached with

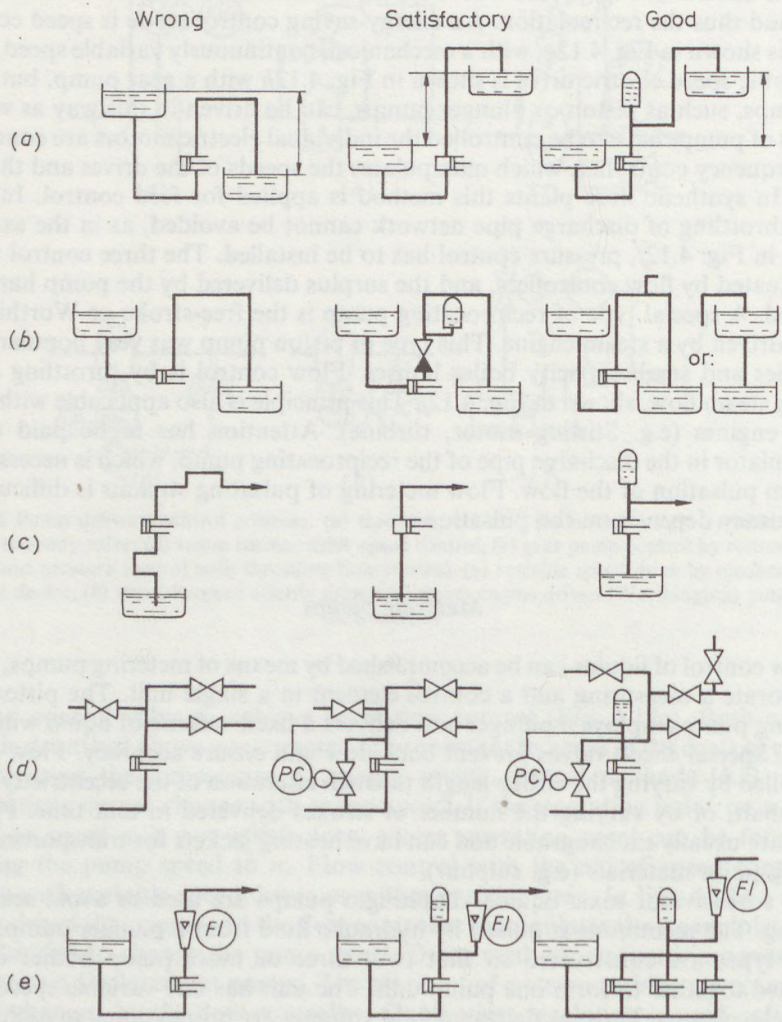


Fig. 4.13 Installation rules for metering pumps

special care. Metering pumps are used for sampling in several plants. If a pump is to operate well it must be properly installed. The main features of wrong, and satisfactory or good installation are shown is Fig. 4.13. Even the best pump can deteriorate in a short time if it is not properly installed and operated. Figure 4.13*a* demonstrates through-flow (siphoning) and methods to avoid it. Figure 4.13*b* shows solutions in situations when the receiver cannot be sited high up and an artificial head has to be created. Figure 4.13*c* shows that the low suction head

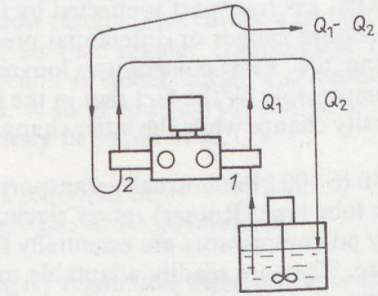


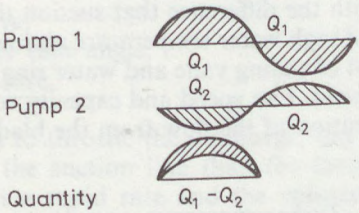


Fig. 4.14 Flow difference control scheme for metering pumps. *1, 2* pumps

caused by a long suction pipe of high resistance should be avoided. The same is true for entrained gases, because this will diminish the accuracy of metering. Long discharge pipes have to be eliminated because they cause inertial forces. A sudden start or stop may cause rupture of the pipe. Figure 4.13*d* shows a case of metered flows along several routes where, by erroneous manipulation, all valves might be closed. Installing a relief or back pressure valve is the solution here.

To obtain smooth flow three pumps working in parallel, or triplex pumps, are recommended, with the strokes adjusted to be 120 degrees apart. If the liquid is a rapidly settling suspension (slurry) and a small flow volume is required, differential metering is recommended. Two large pumps with ample cross-sections are used to avoid settling out of the solids. The two pumps deliver the difference of their capacity by working in opposite senses. Special materials are used to resist erosion. The scheme is shown in Fig. 4.14.

### 4.2.3 GAS AND STEAM FLOW CONTROL

The pressure for the transportation gaseous fluids in pipes can be obtained from a pressure vessel or a gas compressor, or by introducing heat (e.g. boiling). The dynamic behaviour of the pressure source has to be considered in specifying of the flow control system.

*Control of fans and blowers*

Low pressure (1 to 10 kPa) gas transport is effected by fans. Instrumentation is generally simple, using pressure gauges or differential pressure gauges, the latter may serve for flow metering, too. Flow control uses louvres in the air ducts. Fans are distinguished from compressors by the fact that in the former the working gas suffers no appreciable density change while the latter changes the density of the gas considerably.

Medium pressure gas (10 to 100 kPa) is usually transported by positive displacement blowers, such as the lobe type (Rootes) rotary screw, water ring and sliding vane compressors. Rotary pd compressors are essentially fixed capacity machines with varying back pressure. They are readily adaptable to variable speed drives, and in this way to flow control. Control schemes are similar to those of pd liquid pumps discussed earlier, with the difference that suction throttling is allowed.

High gas temperature and high water temperature alarms are recommended for most types. Speed reduction of sliding vane and water ring compressors is limited to about 60% of normal speed. Fan speed and capacity control is limited by the stalling effect, i.e. the separation of the flow from the blades.

*Turbocompressor control*

Turbocompressors may be radial flow or axial flow types according to the motion of the fluid as it passes through the impeller. Centrifugal compressors in the chemical and petroleum industries have a large flow capacity and are usually

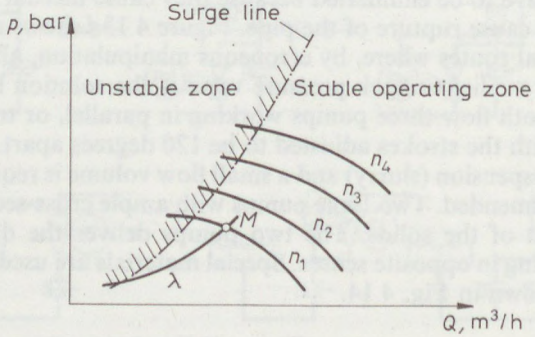


Fig. 4.15 Turbocompressor characteristic curve. λ-line resistance; *M*-operating point; *n*-speed

multistage units. The objectives of a compressor instrumentation and control system are to maintain the balance between demand and supply, to monitor the operation of mechanical components, and to prevent malfunction or breakdown [4.12].

The head-capacity characteristic curves of a centrifugal compressor are shown in Fig. 4.15. It must be remarked that the position of the curves also depends on inlet gas temperature, gas molecular weight and inlet pressure. Curves are drawn for different speeds. At a particular speed, as the flow is reduced, a point is reached where the back pressure exceeds the pressure ratio developed by the compressor and breakdown of the flow results. This causes a reversal in the flow direction and reduces back pressure, so that regular compression resumes and the cycle is repeated. This phenomenon is called 'surge' and on each characteristic curve a surge point is indicated. A surge line (curve) can be drawn through these points.

Compressor control may be required if:

(*i*) constant gas flow is required, or
(*ii*) constant gas pressure has to be maintained.

For compressor capacity regulation three methods are used:

(*i*) variable speed drive,
(*ii*) variable inlet guide vane angle,
(*iii*) variable inlet pressure.

A fourth possibility is to throttle the discharge, but the power consumption is less for throttling in the suction line than for throttling of the discharge. If load changes occur at a rapid rate and the volume at the discharge is small relative to the capacity, speed regulation to maintain constant pressure is usually not feasible. Variable speed control is well suited to constant flow regulation. Large turbines driving compressors are controlled either with mechanical–hydraulic or electronic–hyraulic speed controllers (governors) overspeed protection being incorporated.

To avoid surging, and with it the destruction of the compressor, a surge control system has to be applied. It is common practice to maintain a minimum flow through the compressor, by recirculation of excess gas to the suction side or by blowing down excess air not required by the technological process. Fig. 4.16 illustrates anti-surge protection systems. In the case of constant speed drive, the simple flow control shown in Fig. 4.16*a* may be sufficient. Flow measurement should theoretically be in the suction line but is frequently installed in the discharge line, where the pressure loss of the orifice is less significant. Temperature variation should be evaluated to avoid flow measurement error. Because the surge point also depends on pressure, pressure measurement is included in the control system shown in Fig. 4.16*b*. The inlet flow is measured by an orifice and the signal of the flow is transmitted through a square root relay to the surge controller, which calculates the set point relative to the surge line. A discharge pressure controller manipulates the inlet vane angle, utilising the pressure signal from the same transmitter which is coupled to the surge controller. Calculation follows the

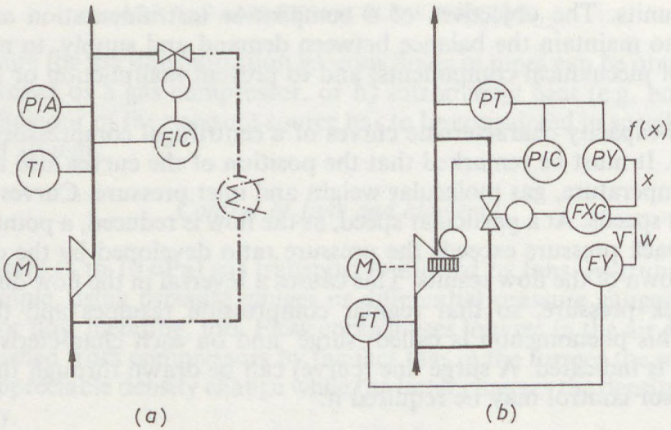


Fig. 4.16 Anti-surge control schemes

equation:

$$y = C(x - w) + y_0, \tag{4–11}$$

where $C$ — represents the slope of the surge line $0.2 < C < 20$,
$w$ — flow signal;
$x$ — reference input, calculated;
$y_0$ — operating point coordinate, and
$y$ — manipulated variable.

The flow controller has a PI (proportional–integral) to P (proportional) switch in order to increase the speed of action [4.20].

An example of surge control for a natural gas compressor at a Hungarian plant is shown in Fig. 4.17. A process flow resistance change results in a change of the operating point $M$ on the characteristic curve of the compressor. To achieve economic performance, it is recommended to operate at low capacity and with a high pressure operating point. A flow controller is suitable for this purpose, stabilising the line resistance curve by manipulating the recycle flow rate. A safety margin has to be set to avoid surging and to have a stability reserve available. The compressor speed is manipulated by a pressure controller (PRC 107) via a turbine governor control. Figure 4.17*b* shows the characteristic curves, with the lines connecting the points of critical conditions and with the line of the operating points which is nearly parallel to the critical line. The slope of this latter operating line varies with the gas temperature and density (molecular weight), therefore the worst case has to be considered. The slope of the operating line is determined by the control system. The ratio relay (FY-111) adjusts the ratio $C$ of the signal from the pressure difference transmitter (PDT-101) and that from the flow transmitter (FT-118). The output of the ratio relay is the reference input of the flow controller (FIC-118). The suction vessel pressure is controlled separately (see Fig. 4.17*a*).

For some types of compressors, power consumption measurement is used for surge control. The power input to the compressor drive motor is proportional to flow in the range of interest, and can easily be measured. In addition there are several other anti-surge control methods. Besides anti-surge and capacity control, compressor instrumentation may include:

— overload limiting control;
— lube oil (lubricant) system control;
— seal oil system control;
— bearing temperature monitoring;
— vibration measurement and analysis (diagnostics);
— recycle flow cooling control.

Most of these instruments and controllers may be supplied by the compressor vendor if required.

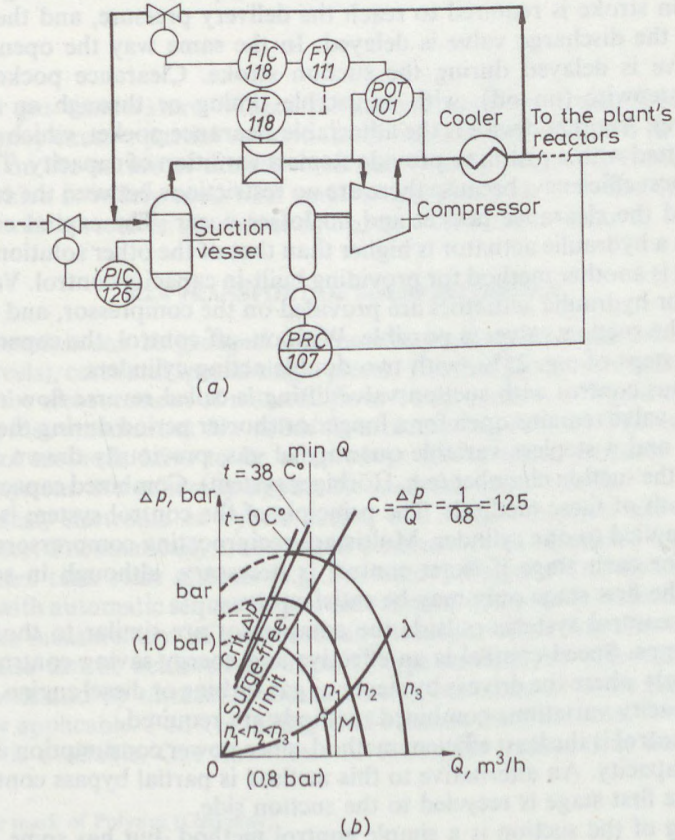


Fig. 4.17 Natural gas compressor anti-surge control. (*a*) control scheme; (*b*) operating diagram

*Axial flow compressors* are used to deliver large quantities of gas at relatively low pressure. Their typical characteristic curve is steep, and therefore not well suited to throttling control. Special control systems are available from the suppliers.

### *Control of reciprocating compressors*

The objective of reciprocating compressor control is similar to that already presented in connection with centrifugal compressors; only the methods differ. Capacity control methods can be divided into two categories:

— devices built into the compressor,
— control systems outside the compressor.

A built-in device for capacity control is the clearance pocket (a small subsidiary reservoir). Capacity reduction by clearance pocket is based on the fact that if a surplus volume is connected to the cylinder during compression, a larger fraction of the piston stroke is required to reach the delivery pressure, and therefore the opening of the discharge valve is delayed. In the same way the opening of the suction valve is delayed during the suction stroke. Clearance pockets can be connected stepwise (on–off), with adjustable timing or through an adjustable orifice (valve). Another device is the adjustable clearance pocket, which consists of a cylinder fitted with a piston to provide stepless variation of capacity. This system has the highest efficiency, because there are no restrictions between the compressor cylinder and the clearance pocket and no losses occur. The capital cost of this system with a hydraulic actuator is higher than that of the other solutions. Suction valve lifting is another method for providing built-in capacity control. Valve lifting pneumatic or hydraulic actuators are provided on the compressor, and automatic control of the suction valves is possible. With on–off control, the capacity can be changed in steps of e.g. 25%, with two double acting cylinders.

Continuous control with suction valve lifting is called reverse flow regulation. The suction valve remains open for a longer or shorter period during the compression stroke and a stepless variable quantity of gas, previously drawn in, can be returned to the suction chamber (e.g. Hörbiger system). Combined capacity regulation uses both of these methods. The principle of the control system is shown in Fig. 4.18, applied to one cylinder. Multistage reciprocating compressors require a controller for each stage if exact control is necessary, although in some cases control of the first stage only may be satisfactory.

Capacity control systems outside the compressor are similar to those applied with pd pumps. Speed control is an effective and energy-saving control method, applied mainly where the drive is by steam or gas turbine or diesel engine. For cases of large capacity variations combined methods are required.

Bypass control is the least efficient method, since power consumption is the same as for full capacity. An alternative to this method is partial bypass control, when gas from the first stage is recycled to the suction side.

Throttling of the suction is a simple control method, but has some disadvantages. The compression ratio increase involves higher thrust on the piston and gear,

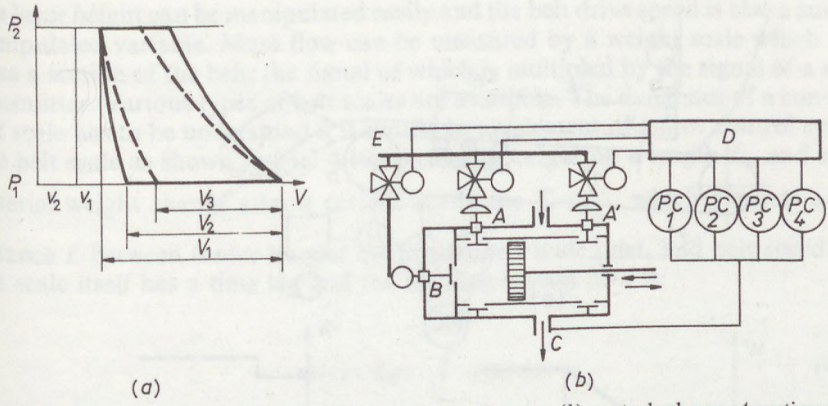


Fig. 4.18 Reciprocating compressor control (*a*) operating diagram; (*b*) control scheme. *A* suction valve; *B* clearance pocket valve; *C* discharge pipe; *D* control system; *E* instrument air; $V_1$ swept volume; $V_2$ maximum sucked volume; $V_3$ reduced sucked volume; $v_1$ cylinder clearance; $v_2$ clearance pocket volume

and higher gas temperature. Where the suction pressure is nearly atmospheric, throttling may cause a partial vacuum in the suction line. This can be dangerous, depending on the nature of the delivered gas. A simple capacity control method, and one which is widely used with small compressors, is the start–stop control, combined with a receiver gas vessel equipped with pressure control.

### 4.2.4 TRANSPORT OF SOLID MATERIALS

Solid materials can be grouped into powder, bulk granulated materials, piece goods (parcels), cases and special single pieces. The first problem in solids transport control is the measurement of material flow. There are lots of liquid and gas flow measuring instruments, but few solids flow measuring devices. The measurement and control methods have to be adapted to the material property and to the transport system. No generally applicable methods are available.

Mechanical, electronic or hybrid scales, and weight hoppers are applied for batch service. Pneumatically transported powers can be measured intermittently with pressure tank scale systems (e.g. Pneumex*, Polydos**), which are usually equipped with automatic sequencing to ensure semi-continuous material transport. Continuous measurement of pneumatically transported or free flowing powders and granules can be achieved by impeller type sensors, by differential pressure measurement and by ultrasonic measurement, but none of these instruments is universally applicable. For free falling solid streams the Granumet*** gravimetric flowmeter is available. One flow detector for solids transport in ducts or pipes

* Trade mark of Polysius (Germany)
** Trade mark of Freier Grunder (Germany)
*** Trade mark of Endress & Hauser (Germany)

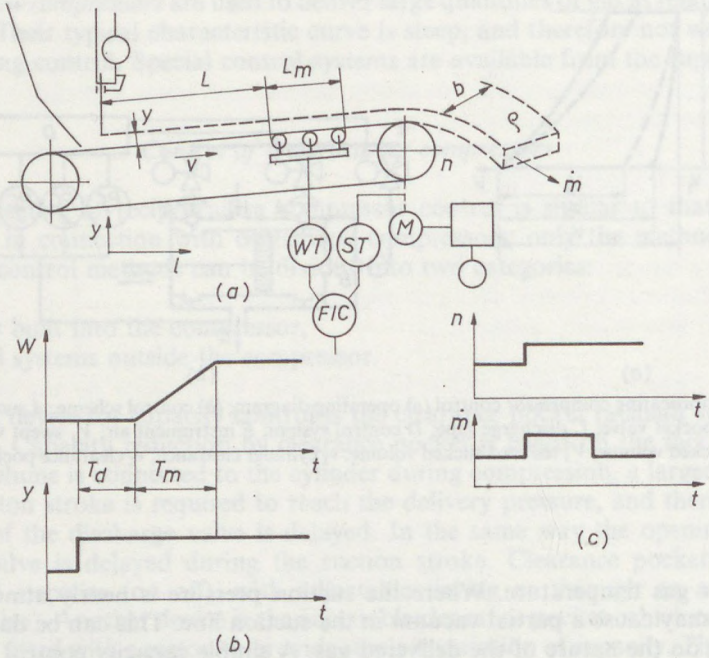


Fig. 4.19 Conveyor belt scale controller

works on microwave reflection principles (e.g. Granuflow*). Mass meters measuring the Coriolis force are theoretically suitable for measuring solids flow rates too, and some devices have been developed. The flow measurement of bulk material is done in most cases by conveyor belt scales.

*Flow control of bulk materials*

There is no such universally applicable final control element for solids as the valve for fluids. Belt conveyors are widely used in the chemical industry for transport of solid material, and manipulation of the flow is possible for control purposes.

Material flow $\dot{m}$ on a conveyor belt is a function of belt velocity $v$, material layer thickness $y$, apparent density $\varrho$ and belt width $b$ according to the equation

$$\dot{m} = b \cdot y \cdot \varrho \cdot v \quad \left(\frac{\text{mass}}{\text{time}}\right). \tag{4–12}$$

* Trade mark of Endress & Hauser (Germany)

The layer height can be manipulated easily and the belt drive speed is also a suitable manipulated variable. Mass flow can be measured by a weight scale which measures a section of the belt, the signal of which is multipled by the signal of a speed transmitter. Various types of belt scales are available. The dynamics of a conveyor belt scale has to be understood if it should be an element of a flow control system. The belt scale as shown in Fig. 4.19*a* measures weight on a length $L_m$ and senses material weight change after a certain dead time $T_d = \frac{L}{v}$, which depends on the distance $L$ between feeder hopper outlet and belt scale inlet, and belt speed. The belt scale itself has a time lag and the measured mass flow is:

$$\dot{m}(t) = b\varrho v \int_{t}^{t-\frac{L_m}{v}} y(u)\,\mathrm{d}u, \tag{4–13}$$

where

$$u = t - \frac{l}{v}.$$

A detailed analysis of this belt scale is given in the literature [2.18]. Figure 4.19*b* gives a picture of the change of feeding slide-valve position $y$ and its effect on the belt scale indication. Figure 4.19*c* shows the effect of speed change on material flow. It will be observed that a change of speed has an immediate result in terms of a flow rate change.

For flow control, belt scales have to be combined with variable speed feeders or slide valves. Fig. 4.20 shows a control system of this type. The weighing belt is put on load cells, driven at a constant speed and, according to the measured value, the controller manipulates feed through a variable speed drive and a screw conveyor.

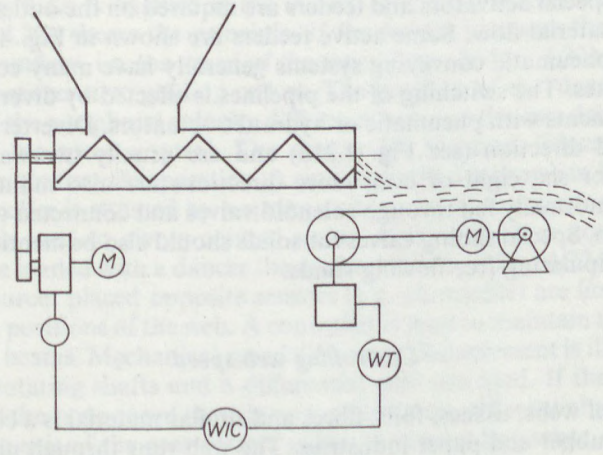


Fig. 4.20 Belt scale feeder

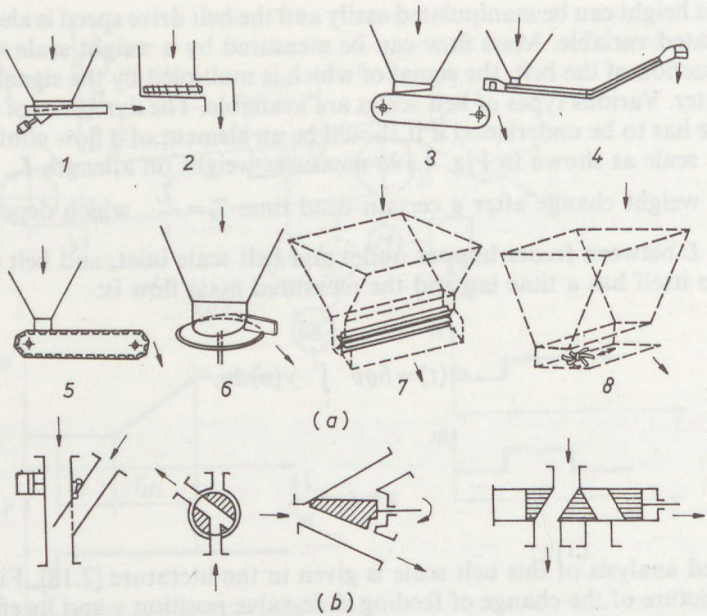


Fig. 4.21 Solids manipulating devices. (*a*) feeders; (*b*) diverters. *1* vibrator; *2* screw; *3* belt; *4* scraper conveyer; *5* bucket belt; *6* rotating plate; *7* cell feeder; *8* moving scraper

Radioactive type belt scales are available which measure the thickness of the material layer on the belt. Volumetric metering feeders work with variable speed transporting screws and vibrators. A screw conveyor can be installed on a scale or on load cells and used for flow control with a variable speed drive.

Bulk solids and powders do not flow readily from silos because of bridging or 'rat-holing'. Special activators and feeders are required on the outlets to guarantee continuous material flow. Some active feeders are shown in Fig. 4.21*a*. The pipe networks of pneumatic conveying systems generally have many combinations of transport routes. The switching of the pipelines is effected by diverters. These are valve-like elements with pneumatic or hydraulic actuators. Diverters give free flow in the desired direction (see Fig. 4.21*b*) and are usually two-way devices, but distributors for six, eight or even more directions are also manufactured. The actuators are normally fed through solenoid valves and connected to an electronic control system. Special sliding valves for solids should also be mentioned. They are used for manipulating free flowing solids.

### *Controlling web speed*

Transport of webs, tissues, foils, fibres and similar material is a common task in the plastics, rubber and paper industries. The web runs through nip sections and the drive control system has to fulfill the following functions:

— web transport without breakage or crumpling;
— maintaining length and tension of the web;
— guiding the web between the nip sections;
— load distribution between the nip sections;
— control of the time cycle of the whole process;
— control of the sub-processes.

The variables which are characteristic of the process are web length, speed and tension, roller speed, angle of rotation and torque. Further variables of importance are the web material characteristics, moisture, coating material property, ambient air humidity, temperature, roller surface, etc. A variety of technologies are available, each with unique control objectives. Rollers and nip sections may serve for mixing, calendering, stretching, pressing, coating drying, folding, storing, winding, etc. The main common system is the electric drive control system. The drive control system has to ensure web transport in a prescribed way and match the energy variations in space and time. In older installations, mechanical drives with a common power shaft were used, but in modern plants an 'electric shaft' is applied with special control systems.

The dynamic behaviour of a web section between two nips is described by the material balance equation:

$$\frac{\mathrm{d}}{\mathrm{d}t}\left(\frac{l_{12}}{1+\varepsilon_{12}}\right)=\frac{v_1}{1+\varepsilon_{01}}-\frac{v_2}{1+\varepsilon_{12}}, \tag{4–14}$$

where $l_{12}$ — distance between nips 1 and 2;
$v$ — peripheral velocity of the rollers; and
$\varepsilon$ — tension in the web.

Further analysis of the system and of the electrical drives is given by Kessler [4.10].

The control signal is usually the web length. Different measuring methods are shown in Fig. 4.22. A balance in the middle of the nip section weighs the stored web. Figure 4.22*a* shows the principle. If the weight increases the controller will increase the outflow, i.e. the speed of the second nip. In Fig. 4.22*b* a cylinder rests on the web between two guiding rollers. The position of the 'dancing' cylinder is a measure of the peripheral velocity difference between the two driving rollers and can be used for speed control. The dancer (in German, Tänzerwalze) has an additional weight for safe operation. A similar method is shown in Fig. 4.22*c* where the dancing roller is stressed by a spring and moves on a circular path. The angle of the lever is used to give a control signal. If the web does not have sufficient strength to be loaded with a dancer the method shown in Fig. 4.22*d* can be applied. Two light sources placed opposite sensors (e.g. photocells) are installed to detect low and high positions of the web. A controller is used to maintain the web between the two light beams. Mechanical speed difference measurement is illustrated in Fig. 4.22*e*. Two rotating shafts and a differential gear are used. If the two shafts are rotating with the same speed there is no motion in the differential gear, but for any difference the axis of the gear rotates in the corresponding sense. A variable gear is installed to adjust the desired speed of the second nip. There is no feedback from

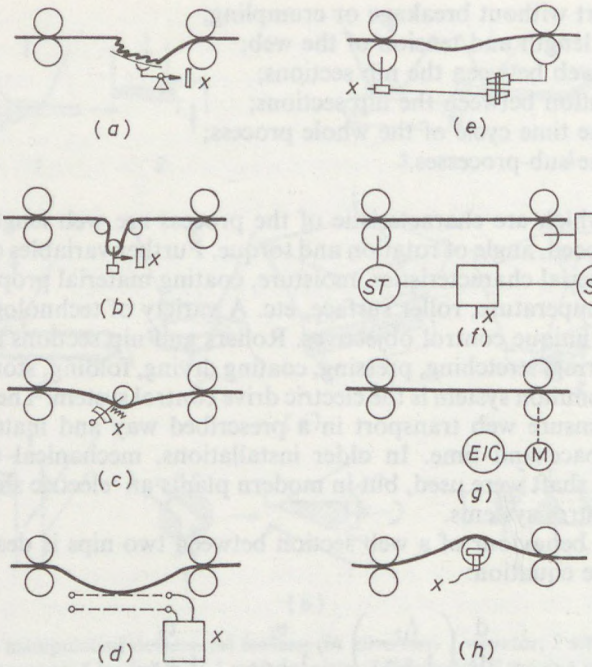


Fig. 4.22 Web speed control

the web. An electrical speed measurement is used in the system of Fig. 4.22*f*. Signals from the two tachogenerators form the input of the drive controller. This control system is a proportional one, in contrast to those illustrated before, which have been integrating types. This means that the slightest difference is detected if it lasts long enough, because of the integration. Proportional sensing systems have to be accurate to ensure precise control. Instead of tachometers, impulse generators can be installed on the roller shafts and a digital speed difference control applied. With modern digital control systems an accuracy of $\pm 0.03\%$ over 24 hours can be achieved. In cases where the power requirement of an electric drive is significantly less when idling than when under load, power control is possible as in Fig. 4.22*g*. This method is sometimes used in winding systems. Length impressed web control is shown in Fig. 4.22*h*, where the force exerted on a guiding roller is measured with a load cell.

A non-contacting laser velocity meter is available to measure web speed. This works on the basis of the Doppler effect. A beam splitter breaks the laser beam into two identical beams, which are directed onto the surface of the web at slightly different angles. Both beams are aligned to meet at the same point on the surface. The frequencies of the reflected light beams are shifted, compared to the frequency of the original light, by the web movement. The shifted frequencies are superimposed so that an interference fringe pattern is produced which is proportional to the speed of the moving web [4.15].

Transport systems for solids in modern plants are equipped with monitoring and control devices which are integral parts of the whole plant control system. This will be illustrated in the next Section.

## 4.3 AUTOMATION OF BLENDING AND FILLING

An important and frequently used unit operation is the mixing or blending of batches or streams of materials to exact recipes. The blending section in several plants is an independent part, e.g. in oil refineries. Large blending and mixing plant sections operate in pesticide and plastics processing plants.

### 4.3.1 IN-LINE BLENDING

In large capacity petroleum refineries the production of standard components and then mixing them according to customer demand is more economic than producing a variety of end products. That is why a blending section is an essential component of the refineries. Small capacity plants use mixing tanks for blending, but in large capacity plants seperate tanks and pumps are too expensive, and therefore blending in the pipe was introduced. This method, called 'in-line blending', requires special instrumentation and control systems. High accuracy and safe operation are required.

The mechanical systems are outdated because digital in-line blending systems of high accuracy and reliability are available. The operating principle of a digital blending system is shown in Fig. 4.23. A master oscillator produces a coded output which is fed to the parallel-connected pulse dividers which set the component

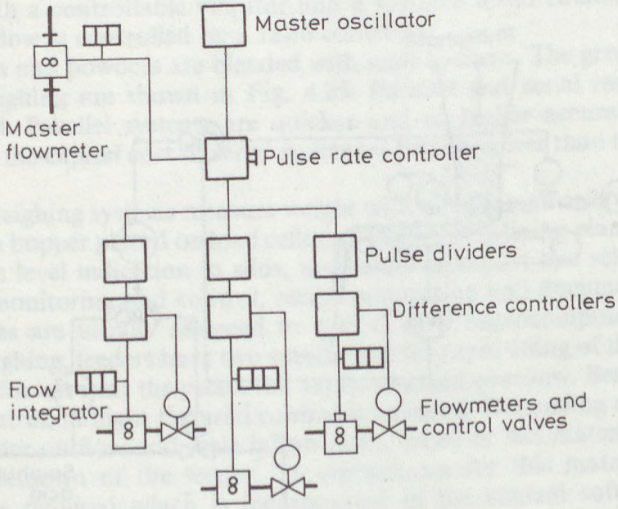


Fig. 4.23 In-line blender

percentages. Each component has a controller with an impulse difference counter, a flowmeter, an integrator and a control valve. The system receives the impulse output of turbine and pd flowmeters, the pulse rate being proportional to flow rate. Accurate blending is achieved by a control system in which the flow rate is controlled by comparing the flowmeter output pulses with the pulse rate selected on the component setting pulse divider. The output signal of the controller actuates the control valve and manipulates flow in a sense to make the pulse rate of the flowmeter match the preset rate. A volume error may appear during start-up. To avoid this error, a second integration is applied in the control system. Automatic fault detection and shutdown procedures are included to prevent delivery of products outside specification limits. Instead of the master oscillator, a master flowmeter can be installed. For metering of additives in small quantities, metering pumps or loss-in-weight feeders are used in several plants. End point quality control is incorporated in the control system. A density meter, Reid vapour pressure (RVP) meter, octane rating meter, flash point meter, etc., may be installed and connected. Microcomputer-based systems are available with optimising services. Simpler blending control does not need sophisticated digital blenders and in this case the ratio control with analogue or digital controllers is sufficient (see Section 2.5).

### 4.3.2 MIXING PLANT AUTOMATION

Automatic mixing plants or plant sections can be grouped into

— continuous flow systems, or
— batch systems.

Batch systems are usually more accurate than continuous ones. Calibration and

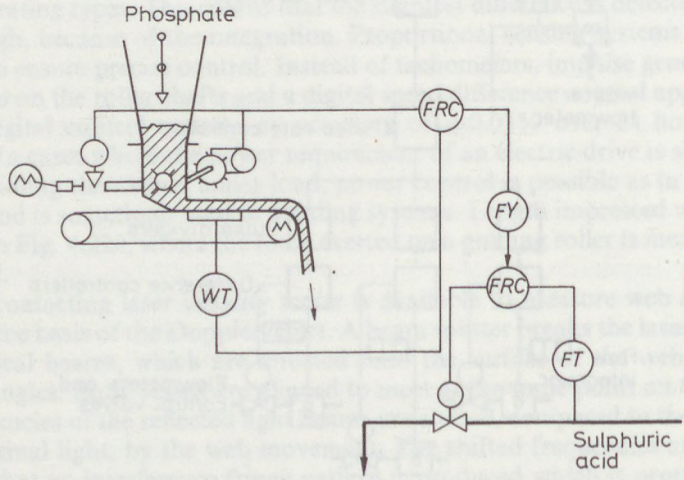


Fig. 4.24 Flow ratio control for superphosphate

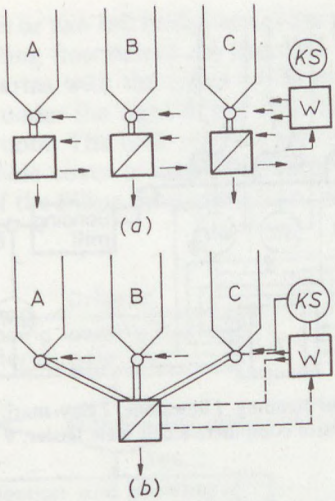


Fig. 4.25 Batch weighing and mixing methods. (*a*) parallel method, individual weighing; (*b*) sequential method, cumulative weighing

maintenance are easier for batch systems. Mixing equipment and storage tanks are cheaper for continuous systems. In the chemical industry, the large capacity single product mixing plant sections are usually continuous. Plants with a large variety of products or a small throughput in most cases operate batch wise.

Blending of liquid and solid phase materials is often necessary in the fertilizer industry and in plastics production. Fig. 4.24 shows a blending system for a superphosphate fertilizer plant. Phosphate is fed by a belt weight feeder which is equipped with a controllable vibrator and a variable speed rotating feeder. Sulphuric acid flow is controlled by a ratio controller.

Bulk solids and powders are blended with scale systems. The general principles of batch weighing are shown in Fig. 4.25. Parallel and serial methods can be distinguished. Parallel systems are quicker and of higher accuracy than serial systems, but the capital cost of serial systems is usually lower than that of parallel systems.

Modern weighing systems measure weight with electric load cells or load beams. The scale is a hopper placed on load cells (see Fig. 4.10). Mixing plant instrumentation includes level indication in silos, automatic transport line selection, mixing equipment monitoring and control, recipe monitoring and documentation. Control functions are usually assigned to a PLC or a microcomputer. To achieve accurate weighing, feeders have two speeds: one for rapid filling of the hopper, and a low speed for use near the preset full value, to avoid overflow. Beside coarse and fine flow control, in flight material control is included. Depending on the distance between feeder outflow and scale inflow ports, more or less material is in the air after the shutdown of the feeder. To compensate for this material surplus, a correction is required which is incorporated in the control software. Control software should include static detection, tolerance checking, self-learning correc-

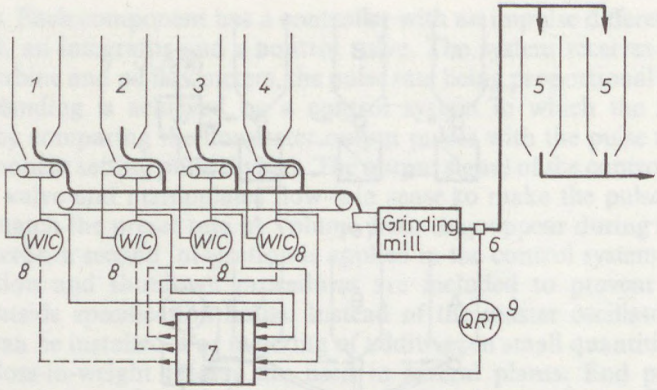


Fig. 4.26 Continuous raw material blending. *1* limestone; *2* clay, marl; *3* sand; *4* pyrite; *5* homogenising silo; *6* sampler; *7* control computer; *8* belt scale feeder; *9* X-ray diffractometer

tion, alarm protocol, recipe calculation and control. Special production control software is sometimes offered with blending control systems. Batch reports are printed on request. The accuracy of weight measurement depends on the weighing procedure. In the case of serial weighing, the scale measuring range is large if all components are fed into the scale hopper and measured. The accuracy for small volume component weight measurement is poor in this case. A combination of parallel and serial methods may be advantageous. To judge accuracy, one has to consider that if a batch of 1 ton has to be blended with 1% tolerance and the batch consists of 10 components of 100 kg each, the required accuracy of the scale would be 0.1%.

A continuous solids blending system is shown in Fig. 4.26 for a cement factory. Raw material preparation is carried out in an automatic blending system. Raw materials are not of uniform composition, so ratio control in itself is not satisfactory. In practice all ingredients are of varying composition, and therefore sampling and analysis are required after grinding. The X-ray diffractometer analyses the sample and the control computer calculates the optimal material streams, which are set automatically on the belt conveyor feeders. Weighing hoppers can be used for continuous feeding on the principle of loss-in-weight.

### 4.3.3 AUTOMATIC WEIGHING AND FILLING

Controlled filling of bottles, sacks, or tank wagons is a task which is frequently encountered in the chemical and petrochemical industries. Automatic bottle and can filling equipment and sack filling machines are beyond the scope of this book. Road tanker and railway tank wagon filling automation only will be described. The goal of a railway tank wagon filling station is to fill the tanks at one place, as quickly as possible and with the minimum of filling tubes, i.e. at low capital cost. A train consisting of many wagons could be filled through parallel filling tubes, but this method requires enormous capital cost if all filling sites are equipped with instruments and controllers. A modern filling station has one filling site with filling

tubes for each product. One or two rail bridge scales are provided to measure short and long wagons. Integrating flowmeters are installed in the filling station pipe connections. If the filling arms with the tubes are in fixed locations, the wagons have to be placed exactly under the right filling arm. The whole filling process is governed from a control room. The tank wagons are towed by special devices to the right place. The manhole cover is usually opened manually and earthing is done by hand. Insertion of the filling tube, retraction, fixing, filling, stopping and

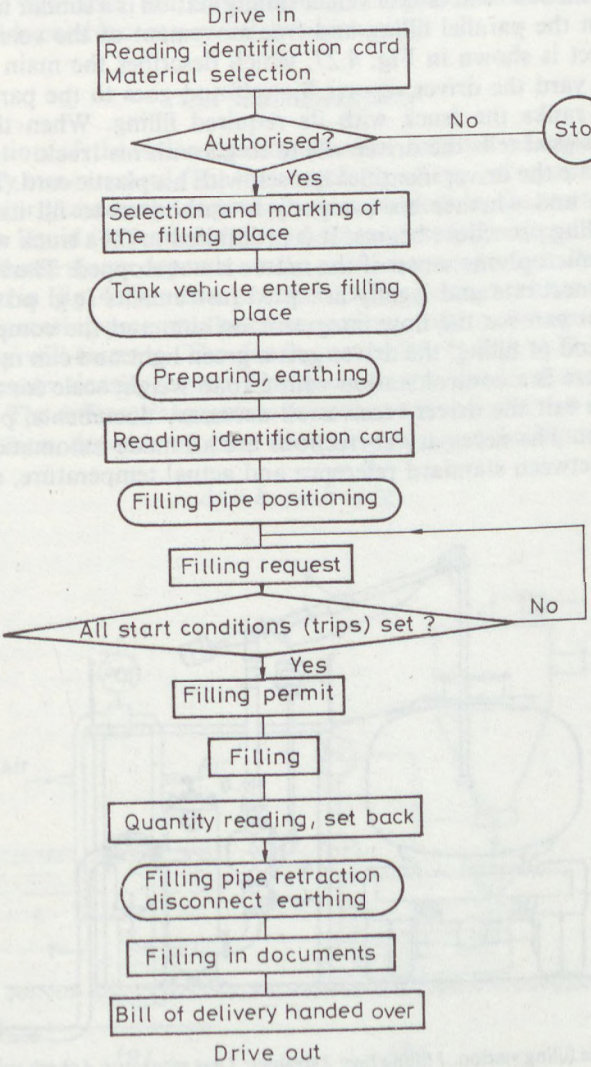


Fig. 4.27 Tank vehicle filling process flowchart

removing are all controlled automatically. Position sensors detect the exact position of the tank, and code detectors identify the wagon. Data, such as the material, customer's name and address, etc., are manual inputs to the control computer. The database includes data of the wagons (length, wheelbase, empty weight, etc.). The filling procedure is controlled and supervised and, after filling the whole train, all necessary documents are printed. Liquid velocities are constrained, with slow starting and slow finishing required for smooth operation and accurate measurement. Overfill protection is provided in the system. The idle time of trains can reduced considerably with an automatic filling station.

The automation of a road tanker vehicle filling station is a similar task. The main difference lies in the parallel filling and free movement of the vehicles. A filling process flowsheet is shown in Fig. 4.27, which describes the main steps. At the entrance of the yard the driver reports himself and goes to the parking lot. The control system ranks the truck with its required filling. When the filling site becomes free a signal tells the driver where to go with his truck.

At the filling site the driver identifies himself with his plastic card. The computer checks his code and whether his company is authorised to fill its truck. After checking, the filling procedure begins. It is prohibited to fill a truck with its engine running, and a microphone senses if the motor is not stopped. The filled quantity is measured by accurate and legally accepted instruments (e.g. pd meters) (Fig. 4.28). The driver can see the flow integrator on site, and the computer receives signals. At the end of filling, the driver gets a green light and can move away. At the yard exit there is a control station with a road weight scale for monitoring if required. At the exit the driver receives all necessary documents, printed by the computer system. The necessary corrections are all made automatically (e.g. for any difference between standard reference and actual temperature, etc.).

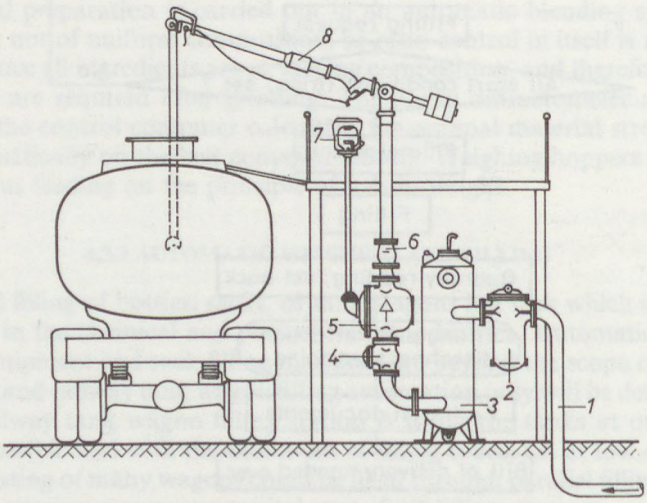


Fig. 4.28 Tank vehicle filling station. *1* filling line; *2* strainer; *3* gas separator; *4* check valve; *5* PD meter; *6* flow restriction; *7* counting device; *8* filling arm

## 4.4 INSTRUMENTATION OF MECHANICAL SEPARATION

Mechanical separation is an operation where little or no instrumentation was used. To increase efficiency, to reduce material outside specification or waste, and to improve safety, proper instrumentation will be essential in the future. Instruments which were first used in separation plants for quality control are optical turbidity meters which control the clean outflow of filters. If there are solid particles in the fluid, scattered light is detected by the sensor. Optical instruments are generally applied to measure solid particles in air or other gases. Electronic instruments are available, too, and mechanical separation methods can be used, but the latter are cumbersome and time-consuming.

### 4.4.1 SEDIMENTATION

Instrumentation of the sedimentation process consists mainly of liquid level, flow and quality measurement. The hydrocyclone is a type of separating equipment in which the slurry entering tangentially is separated in the vortex chamber to provide a clean liquid (or lean slurry) and a downwards flowing dense slurry. The density of the dense slurry depends on the outflow cross-section. A simple control method, shown in Fig. 4.29, uses a pneumatically operated rubber manifold in the outlet. With increasing pressure the cross-section of the outlet opening is reduced and the density will increase. The density controller in Fig. 4.29 has a bubbling differential pressure density sensor. The measuring principle, shown in Fig. 4.29*a*, is well known. The differential pressure measured between the two immersed tubes of fixed separation, depends on their distance apart and the liquid density:

$$\Delta p = h \cdot \gamma = h \cdot \varrho \cdot g \,. \tag{4–15}$$

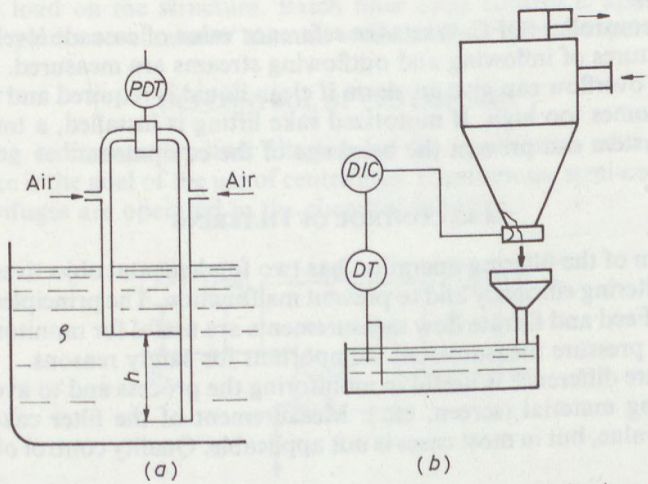


Fig. 4.29 Hydrocyclone control. (*a*) bubbling density measurement; (*b*) density control scheme

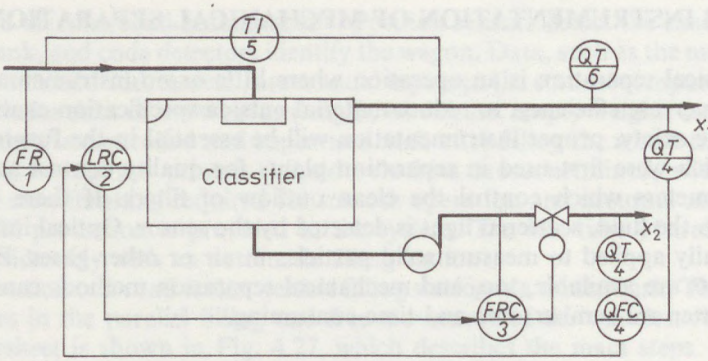


Fig. 4.30 Instrumentation of a Dorr type classifier

The changing variable is density. The measuring tubes are purged with gas (air). There are several methods and devices for controlling the gas purge, ranging from a simple bubbler bottle to a flow controller and indicator rotameter. With the introduction of new more accurate and maintenance-free density measuring instruments, the application of bubblers has become less common.

Fig. 4.30 shows the instrumentation of a Dorr-type classifier of thickener used in the aluminium industry. The slurry feed is measured by a magnetic induction flowmeter, which is insensitive to solid particles. The liquid level is controlled by overflow. The level of the sediment inside the classifier is measured by an optical level sensor and controlled (LRC-2) by the outflow manipulated by flow controller (FRC-3) in cascade. The ratio of the concentrations of the two outflowing streams is the control objective. The concentration ratio ($x_1 : x_2$) is detected by two conductivity or dielectric constant measuring instruments (e.g. Oscimhometer* (QT-4-$x_1$ and QT-4-$x_2$).

The ratio controller (QFC-4) sets the reference value of cascade level controller. The temperatures of inflowing and outflowing streams are measured. A turbidity sensor in the overflow can give an alarm if clean liquid is required and the amount of solids becomes too high. If motorized rake lifting is installed, a torque sensor and alarm system can prevent the breakage of the equipment.

### 4.4.2 CONTROL OF FILTERING

Supervision of the filtering operation has two fundemental objectives: to ensure the desired filtering efficiency and to prevent malfunction. The principles are shown in Fig. 4.31. Feed and filtrate flow measurements are useful for monitoring performance. Inlet pressure measurement is important for safety reasons.

The pressure difference is useful in monitoring the process and to avoid damage to the filtering material (screen, etc.). Measurement of the filter cake thickness would be of value, but in most cases is not applicable. Quality control of the filtrate

* Trade mark of the Hungarian Aluminium Trust.

is very important, to ensure a good product and to detect any filter fault. If the cake is the product of filtration, weight and moisture measurements are required.

From control point of view, continuous and batch filters have to be distinguished. Control of continuous filters is usually an integral part of the equipment and is supplied by the manufacturer. Rotating filters generally have level controllers in the fluid lines, pressure (or vacuum) monitoring and supervision of mechanical parts. In batch filtering operations the control objectives are:

— to get a clean filtrate and avoid contamination during start-up;
— to reach optimum performance, with an optimal time cycle;
— to secure smooth operation and avoid overstraining the equipment and accessories.

An example of batch filter automation is shown in Fig. 4.32. The first period of filtering is governed by flow control. With increasing filter cake thickness the pressure difference, in some cases the pressure itself, will reach an allowable maximum value. In the second period the pressure controller takes over control by reducing the command value of the flow controller. Flow decreases until a minimum flow is reached and then an alarm is given. The minimal flow value is based on the capital cost, operating cost and filtration benefit. The alarm signals the end of economic operation; the cycle has to be finished and an emptying cycle has to be started. Fully automated filters have automatic opening and cleaning facilites linked to filter cake transport equipment. Filtrate quality is monitored by analysis. Optical analysers are generally used, e.g. a turbidity meter. If the instrument detects unfiltered material in the filtrate, it gives an alarm and switches the discharge line to the feed tank. This operation may be necessary during start-up with pre-coated filters. If it senses clean filtrate, the instrument switches the two-way valve to the product tank. Electro-hydraulic closure of a filter press is regulated by a differential pressure controller, which applies oil pressure to the closing cylinder to exert a piston force which is in equilibrium with the inner pressure of the filter, so avoiding too great a load on the structure. Batch filter cycle control is applied in water purification plants to eliminate manual work and to reduce supervision of the operation.

### 4.4.3 CONTROL OF CENTRIFUGES

Improving sedimentation and filtering by the application of an augmented driving force is the goal of the use of centrifuges. Continuous, semi-continuous and batch centrifuges are operated in the chemical industry.

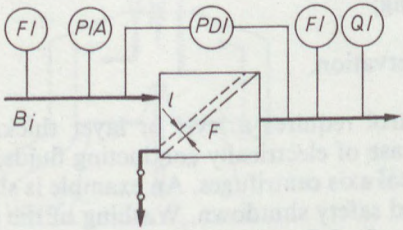


Fig. 4.31 Filter instrumentation

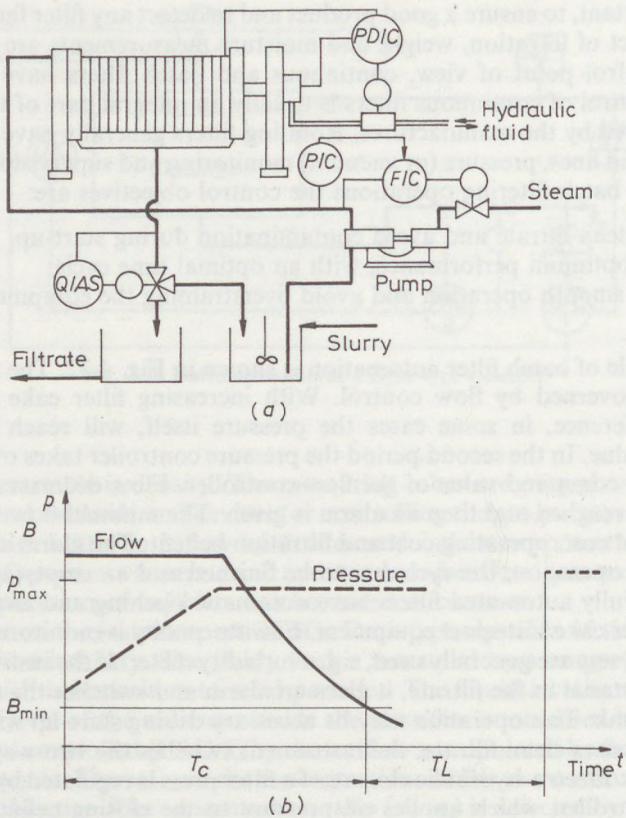


Fig. 4.32 Automatic filter press. (*a*) control scheme; (*b*) pressure and flow diagram

Continuous centrifuges generally have self-contained control systems. These have to be connected to the overall plant control system.

Batch or semi-continuous operation requires instruments for:

— feeding, charging;
— washing, purging;
— emptying, discharging;
— safety, interlocking;
— energy saving, conservation.

Automatic feed control requires a level or layer thickness sensor inside the rotating drum. In the case of electrically conducting fluids, a conductivity sensor can be applied on vertical axis centrifuges. An example is shown in Fig. 4.33, with level controlled feed and safety shutdown. Washing of the cake or the equipment is usually required. The feed flow control application depends on the plant or

process conditions. The feed is shut off if the level sensor gives the 'full' signal, and the control system will operate an automatic peeler blade or flushing fluid valve. After cleaning, the next cycle can begin. Conductivity sensors cannot be applied in all cases and have to be replaced by radioactive level (thickness) sensors. The radiating source is placed in a shielded container equipped with an automatic closure connected to the centrifuge opening, to prevent irradiation of the operators during manipulation. Centrifugal machines are generally equipped with safety devices which protect operating personnel in cases of malfunction or erroneous manipulation. Fully automatic sequential control of centrifugal separation is possible with the application of PLCs or dedicated digital control systems. Automatic start-up with security interlocks is the first step. The speed can be set to a low value during feeding (e.g. 400 rpm), changed during the filtering or sedimentation process to a higher value (e.g. 1000 rpm), and changed again for discharging to 100 rpm for safe peeling. Interlocks governing opening of the equipment and running of the motor, etc., are included in the sequential control system. Centrifuges which have to be stopped for discharging require electrical and mechanical brakes. Energy conservation methods are used to save energy during braking.

A special case is the instrumentation of centrifuges operated under inert gas atmospheres. This is required if combustible or explosive solvents are used in the process. The centrifuge in a closed system is purged with nitrogen or other inert gas through a flowmeter which indicates the actual gas flow rate. An emergency line with a solenoid valve is recommended for rapid purging if the internal pressure drops below a safe limit. The control system has to provide an inert atmosphere with minimum inert gas consumption. The maximum oxygen level has to be monitored to prevent fire or explosion. An on-line gas analyser measures the oxygen content and controls the operation. Above the preset limit concentration (e.g. 6% $O_2$), the solvent feed is shut off, emergency purging is actuated and the centrifuge is stopped. A system stop is also performed if the inert gas pressure is low, or the instrument air or power supply fails [1.8].

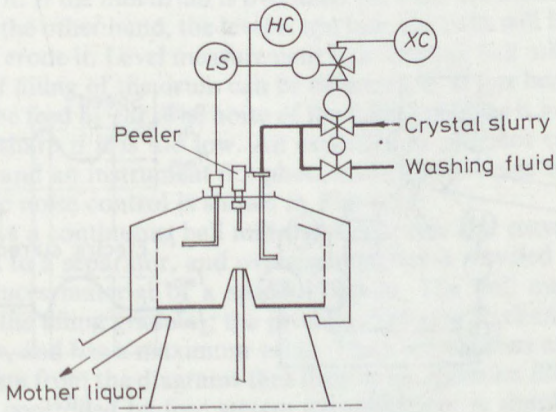


Fig. 4.33 Centrifuge instrumentation

## 4.5 CONTROL OF CRUSHING AND GRINDING

The fundamental requirement for the instrumentation of a grinding or crushing plant is the mechanization of the process. Control objectives for grinding are uniform quality of the product and protection of the equipment. The greatest difficulty lies in the continuous measurement of particle size. Some instruments are available for particle size determination, such as the photo-sizer, which operates on optical principles in the range 0.01 to 500 microns. It is possible to measure particle size with two impact flowmeters and a classifier. With a special control mechanism average particle size detection and monitoring of the oversize distribution allows automatic supervision of a mill or connection to a mill controller (e.g. Milltronics, Sankyo, Japan). There are many types of mill used in industry, but only two typical applications will be illustrated.

### 4.5.1 INSTRUMENTATION OF CRUSHERS

The control objective in this case is the protection of the equipment and to ensure continuous operation. The crusher is fed by a conveyor and a metal detector (XAS) is used to detect metal parts in the limestone. A diverter is manipulated by the instrument if it senses a metal piece. The speed, torque or power consumption is a measure of normal operation. In Fig. 4.34*a*, a control scheme is presented with two alternatives. Variation of the feed normally does not affect steady operation because the flywheel equalizes small variations. In the case of a greater overload, the driving motor protection switches will stop the motor, or a special fracture part of the crusher will break. Both result in standstill and cumbersome emptying, repair and restart procedures.

Depending on the characteristics of the drive, the speed or power (current) of the electric motor changes with load. This change is detected and at its limits switches are operated by the control system. The controller stops the feeder conveyor drive. The crusher works on the material remaining in it and after a certain time it will become empty. Speed or electric current sensors signal this to the controller, which

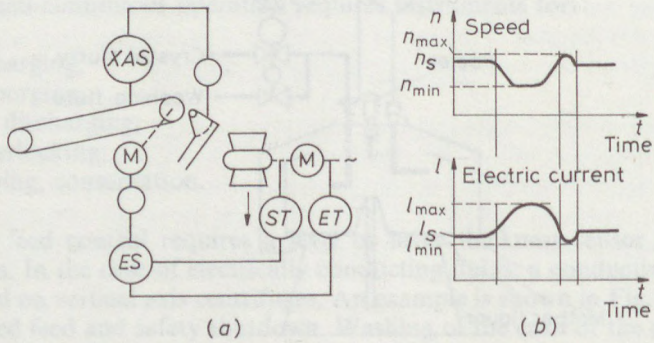


Fig. 4.34 Safety instrumentation of a crusher. (*a*) control scheme; (*b*) speed and power diagrams

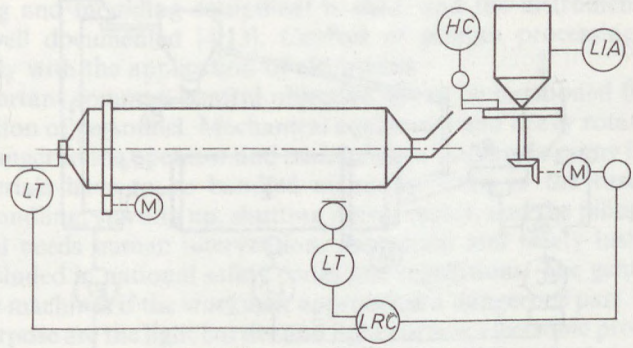


Fig. 4.35 Ball mill control by sound measurement

starts the feeding conveyor again. The process can be followed on the diagrams in Fig. 4.34*b*. If electric current measurement is not adequate, power or torque measurement is recommended.

### 4.5.2 BALL MILL CONTROL

Grinding mills operate in many cases in association with a classifier to achieve effective continuous operation. The control objectives are to keep the throughput at the maximum level and the product within the size specification as the feed material changes in hardness or size. There are dry and wet grinding mills, but the control methods are similar. Grinding efficiency is generally low, while equipment and energy costs are high and increasing. This is why great efforts are being made to improve mill operation by the application of automatic control.

Ball mills are rotating drums partly filled with steel balls. The raw material is fed continuously into one end and ground material flows out at the other. The rotation speed is calculated to lift the steel balls and let them fall onto the raw material and thus comminute it. If the mill drum is overfilled the balls are hindered from falling down, but if, on the other hand, the level is too low, the balls will fall onto the wall of the drum and erode it. Level measurement in a rotating ball mill is not feasible, but the degree of filling of the drum can be determined. It has been observed that millers control the feed by ear. The noise of the falling pebbles is hollow if the level is too high and sharp if it is too low. An experienced operator can distinguish 1 phon difference and an instrument 0.2 phon, while the average noise level is 100 phon. Automatic noise control is shown in Fig. 4.35.

Fig. 4.36 shows a continuous ball mill with separator and recycle. The outflow of the mill is fed to a separator, and oversize material is recycled to the mill. The equipment produces material of a specified grade. The mill outflow rate $B_0$ is proportional to the filling grade $x_L$; the product flow rate $B_p$ changes non-linearly with filling grade, and has a maximum value. Their correlations are shown in Fig. 4.37. It can be seen from the diagrams that there is an optimum filling grade (level) which has to be controlled by feed stream manipulation. A simple feeder control is not sufficient, because there is a recycling stream entering the mill. An adaptive

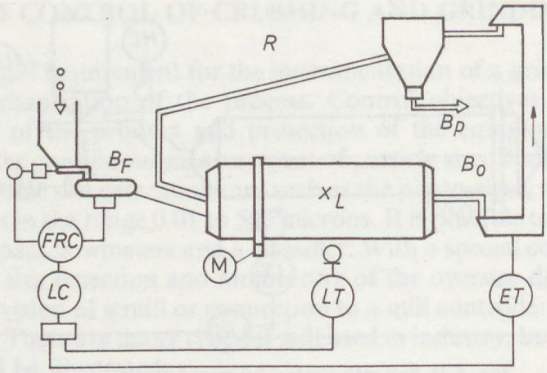


$B_0 = B_p + R$

$B_i = B_F + R = B_0$ $\qquad$ $B_F = B_p$

Fig. 4.36 Extremity control of a ball mill

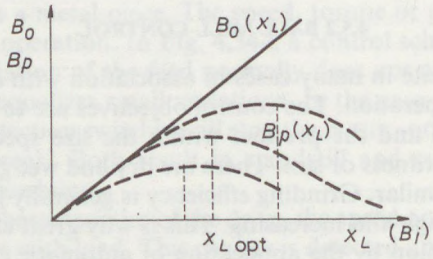


Fig. 4.37 Outflow variation of a ball mill

extremum controller is capable of calculating the optimal value from a mathematical model of the mill. The extremum controller is shown schematically in Fig. 4.38. In the example, outflow is measured by power measurement on the elevator drive, and product flow by a belt scale. An extremum controller is required because the characteristic curve changes with material hardness and size, and steel ball abrasion (wear). Special ball mill control systems have been developed [4.19]. With complex computer control, full automation can be achieved. Water feed control is also required in wet grinding mills and can be incorporated in the complex control system.

## 4.6 CONTROL OF MIXING AND MOULDING EQUIPMENT

Mixing is closely related to homogenisation and composition control. Mixing of fluids is a relatively easy task, but the mixing of solids is associated with several problems. In the plastics and rubber industries a great deal of mixing, kneading,

calendering and moulding equipment is used, and the instrumentation of these items is well documented [4.13]. Control of plastics processing is developing dynamically with the application of electronics.

An important common control objective has to be mentioned first, and that is the protection of personnel. Mechanical equipment and heavy rotating parts mean possible danger to the operator and maintenance worker. In many installations the solid materials have to be handled manually. Even in the case of automatic material handling, starting up, shutting down, repair, and the piling up or sticking of material needs human intervention. Protection and safety instrumentation is usually included in national safety codes and regulations. The general objective is to stop the machines if the workman approaches a dangerous part. Optical devices for this purpose are the light barrier and light curtain; electronic proximity switches or mechanical end switches can also be applied. Special control circuits have to be used for mechanical presses to ensure that the operator has both hands in safe positions.

### 4.6.1 BATCH MIXER AND KNEADER CONTROLS

Solid state material mixers and kneaders are used not only for homogenisation but also to change physical and physicochemical properties of the mixture. Plastic powder is mixed with a softener, raw rubber is mixed with carbon black and additives, and such mixtures are kneaded to change their material structures and produce specificed products.

Sequential control systems are applied for full automation. Opening and closing of the cover by a power cylinder with safety interlock is the first unit. Temperature control and motor starting and stopping are performed according to a time cycle. Preparation of the feed is usually done separately in the blending section (see Section 4.3). The energy input to the kneader (e.g. Banbury) is measured and serves as a control variable. The power consumption of the drive and its efficiency is known, so the energy input into the mixed material can be calculated. Pressure and torque controls are used, with standard machine control and alarm equipment for bearings, etc. Mixing rolling mills are used to prepare rubber and plastics mixtures for calendering. In several plants manual operation is required, which is associated with a degree of personal risk. Special care has to be taken with the protection controls. Automatic material handling is recommended. Temperature control of the cylinders is normally applied.

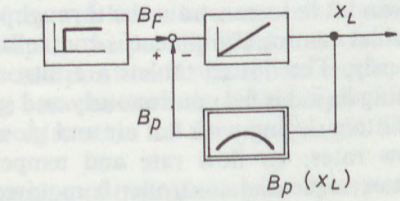


Fig. 4.38 Mill extremum control

### 4.6.2 MATERIAL FORMING AND COATING CONTROL

A special form of mixing requires the forming or shaping of product. One group of these processes includes granulating, tablet coating and the like. The other group includes calendering.

*Granulating control*

In the granulators, solid granules are formed by the mixing of powder and liquid. There are plate-type and fluidizing granulators. Powder is fed through a loss-in-weight feeder or a rotating volumetric feeder as shown in Fig. 4.39. In the latter

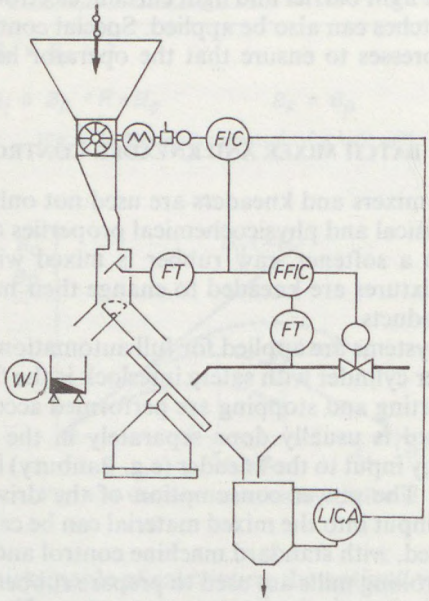


Fig. 4.39 Granulator control

case a flow measurement is required, e.g. an impact flowmeter. A diverter is installed for meter or feeder calibration. A standard scale is used for this purpose. Liquid flow is measured and manipulated through a flow ratio controller. The level of the receiving hopper can serve to constrain the throughput if the level increases above a certain limit. Tablet coating equipment is controlled in a similar way, but generally semi-continuously. The dusted tablets are introduced into the coating pan in batches. The coating liquid is fed continuously and sprayed onto the tablets by atomising air. Intermittent drying with hot air and glossing solution complete the process. Liquid flow rates, air flow rate and temperature all have to be controlled. A time cycle or sequential controller is required.

Webs, foils, sheets and thin plates are produced by a group of rollers, called a calender or extruder, and are shaped, cooled, stretched and wound on rows of rollers or nips. Similar equipment is used for rubber or plastic coating of webs. We have already seen the web speed control methods (Section 4.2.4) which are part of the complex calendering control systems. Modern plants apply computer control which integrates the whole process. The first fully computer controlled systems have been installed in the paper industry, and the experience gained with them led to the development of systems for the rubber and plastics industries.

One of the most important measurements is the determination of thickness. The control objective of a calendering process is to produce a web, foil or coating of

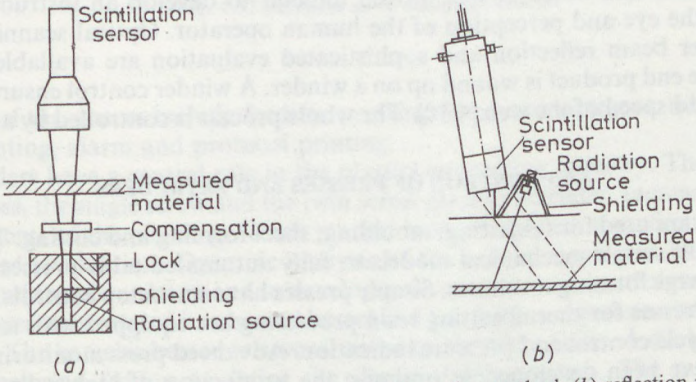


Fig. 4.40 Radioactive thickness measurement. (*a*) absorption method; (*b*) reflection method

uniform quality and specified thickness. The yield depends on precise manufacturing and is fundamental to the economy of process. Sheet thickness is usually measured by radioactive measuring instruments. Two methods are used, applying absorption and reflection principles, which are illustrated in Fig. 4.40. For light materials beta rays are sufficient; for heavier types gamma rays are required. The reflection (backscattering) method has the advantage that both radiation source and sensing instruments are placed on one side of the web. Infrared radiation measuring instruments are also used for thickness measurement. As the width of the foils may be considerable, the thickness at one point is not sufficient for control, and the whole profile of the web has to be measured. Modern thickness gauges scan the whole width and display the profile. Thickness control is exercised by manipulating roller distance and position. Long rollers require roll bending equipment to ensure a uniform gap between the rollers. Gap control is linked to the roller axis positioning hydraulics. Alteration of the pivot angle of the last roller may be included.

Temperature measurement of the roller surface is a special task. Non-contacting sensors are required to provide a control signal for the temperature controller loop.

Radiation pyrometers can be used (e.g. Ardonox, made by Siemens, Germany) with cooling. Air temperature measurement near the moving surface is used, with a small blower to ensure forced circulation and good heat transfer. The principle of this instrument is shown in Fig. 4.41*a* (Thermowirbulator, Hartmann & Braun, Germany). Another temperature sensing method applies an induction coil to induce eddy currents in the roller material, and a pickup coil senses these currents (Fig. 4.41*b*). Temperature changes the magnetic properties of the roll material, and therefore the eddy currents depend on temperature [4.9].

Sheet width is measured by optical or mechanical sensors. The desired finished width of the product is controlled by adjustment of the stock guides. A general picture of a plastics calendering shop is shown in Fig. 4.42, together with the principal measurements and computer control equipment [4.16]. The last supervisory task is quality control of the sheet surface, detection of faults, dark or light spots, cracks and holes. It has proved difficult to develop an instrument which replaces the eye and perception of the human operator. Optical scanning devices using laser beam reflection and sophisticated evaluation are available for some tasks. The end product is wound up on a winder. A winder control ensures uniform tension and speed of the web [4.10]. The whole process is controlled by a computer.

### 4.6.3 CONTROL OF PRESSES AND EXTRUDERS

Presses are used for tabletting, moulding, sheet forming and cutting. They range from small, simple mechanical models to fully automated table presses and high-tonnage large forming machines. Simple presses have start/stop controls and safety devices. Presses for thermosetting resin processing are equipped with temperature control, cycle control and pressure indication. Advanced press monitoring systems (PMS) have been developed to optimise the production of high value products. High performance automatic presses are applied in the pharmaceutical industry and there are computer-controlled tabletting processes (Fette, Germany). The control console with its display is placed in a stainless steel housing. The main

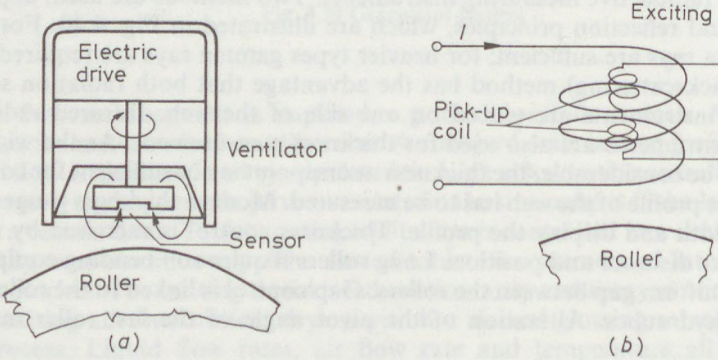


Fig. 4.41 Roller surface temperature measurement. (*a*) air temperature measurement; (*b*) Eddy current measurement

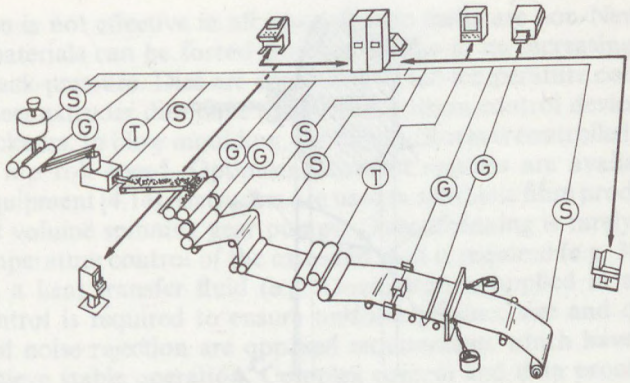


Fig. 4.42 Calender shop computer control

features of the system include feeding, pressing force measurement, tablet control and counting, alarm and protocol printing.

Extruders have a central role in the plastics processing industry. There are two basic types, the single screw and the twin screw plastics extruder. Increasing quality requirements of the plastic products market have compelled manufacturers to use automated production. Dynamic analysis of the extrusion process has helped to understand the phenomena and to develop measurement and control methods. The extruder screw is rotated in a heated barrel and has feed, compression and metering sections. The barrel is heated in several zones to melt the plastic. A die is connected to the metering section to define the shape of the product. The main control objective is to press plastic melt of the specified viscosity and pressure through the die to produce a product of the required specification. Melt viscosity is a function of temperature and shear. Pressure depends on screw speed and viscosity.

The barrel zones are usually heated electrically and thus several temperature control loops are required for one extruder. The first problem is the location of the temperature sensors. The barrel is a thick-walled pipe with a rotating screw, having a small clearance into which it is impossible to insert a sensor. A part of the cross-section of the barrel is shown in Fig. 4.43. It can be seen that difference between melt temperature and measured temperature is load dependent. The temperature sensor measures a higher temperature ($\vartheta_S$) than that of the melt ($\vartheta_M$), because the sensor is placed inside the barrel wall. The heater is placed on the outside wall of the barrel and heat flow depends on the temperature difference between heating temperature ($\vartheta_H$) and melt temperature. The temperature of the environment ($\vartheta_A$) causes heat loss and disturbance. The temperature profile in the cross-section of the barrel is shown for two different loads. Because the temperature controller receives the signal from the sensor, the controlled temperature will differ from the melt temperature if no corrective action is taken. In the first, so-called melting zone, exact temperature control is not essential, and rapid heat transfer is required for melting. In the following compression and metering zones temperatures have to be controlled accurately to reach exactly the required die inlet

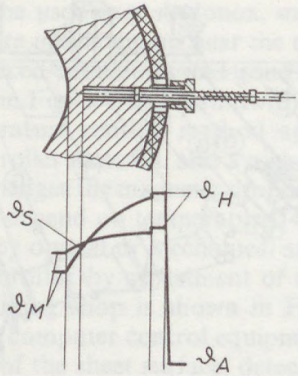


Fig. 4.43 Extruder barrel temperature measurement. $\vartheta_M$ plastic mould temperature; $\vartheta_S$ sensor temperature; $\vartheta_A$ ambient temperature; $\vartheta_H$ heater temperature

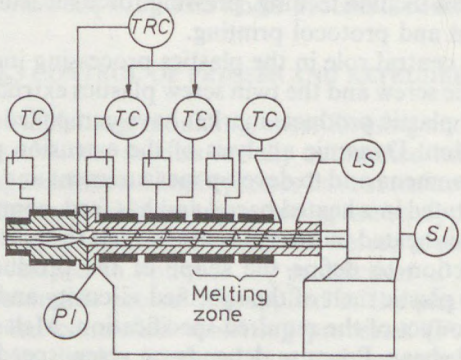


Fig. 4.44 Plastic extruder control system

temperature. For this purpose a cascade control system has been developed as shown schematically in Fig. 4.44. A special sensor is installed in the outlet of the extruder, which is immersed in the melt. Other sensing techniques have been tried, such as ultrasonic propagation speed measurement [4.18]. The master controller sets the reference values of the slave temperature controllers according to accumulated experience for various plastic materials. The experience can be stored and adapted in the memory of microcomputer controllers. At high production speeds the heat generated internally owing to friction will raise the melt temperature and cooling may be required. Fan cooling by air, or water cooling, is provided and included in the control system.

Extruder pressure measurement is the second task which needs special care. Sensing elements are of sealed construction, to avoid intrusion of the melt into the measuring unit. High pressure and high temperature service make it difficult for manufacturers to cope with the problem. Pressure control through screw speed

manipulation is not effective in all cases. Plastic melts are non-Newtonian fluids and some materials can be forced through the die at an increasing rate without increasing back-pressure. Dies are connected to the temperature control system if required. Sheet extruder dies have product dimension control devices for varying the sheet thickness. In blow moulding, the film thickness is controlled by manipulation of the nip roll speed. Optimising control systems are available for blow moulding equipment [4.14]. Extruders are used in synthetic fibre production to feed the constant volume spinning gear pumps. Direct spinning is rarely used. Highly accurate temperature control of the extruded melt is required (e.g. 300°C ± 0.3°C). Heating via a heat transfer fluid (e.g. Dowtherm) is applied in several plants. Pressure control is required to ensure uniform product size and quality. Quick response and noise rejection are opposed requirements which have to be met in order to achieve stable operation. Complex control and data processing systems based on microprocessors are widely used for extrusion plants and processes [4.14].

### 4.6.4 AUTOMATION OF INJECTION MOULDING

The injection moulding process is one of the oldest and best-known plastics processing technologies. Similar instruments to those used for the extruders are applied, but process control is different because injection moulding is a batch process. The main steps of injection moulding are:

(*i*) raw material preparation;
(*ii*) plasticisation (melting);
(*iii*) injection (filling of the cavity);
(*iv*) product moulding;
(*v*) ejecting.

The control system on older machines includes a temperature and a time cycle controller. Reference values were set by experience and intuition. Scientific research revealed the relationships between pressure, temperature, velocity and viscosity and allowed the design of sophisticated computer control systems [4.8]. Changes in material properties are also compensated, and uniform product quality is ensured.

The control system of a typical injection moulding machine is shown in Fig. 4.45. Plastic powder is fed into the feed hopper of the machine. Level control or a level alarm is recommended, depending on the transport system. The material is melted and plasticised in the melting zone by a plasticising screw. Molten material is conveyed to the end zone of the barrel and the screw then acts like a piston and injects the melt into the form (mould). The melting and plasticising zone is heated (usually by electric heaters). The screw rotation which plasticises the material also generates heat by friction, and the temperature control has to take this into consideration. Pressure is the variable by which the whole process can be governed. Pressure in the mould has to be measured by special direct sensors. Small diameter (e.g. 4 mm) sensors are placed near the ejector, or pressure sensors are connected via a rod to the cavity. A three loop injection control system, described by Allerdisse [4.1] is shown in Fig. 4.45, connected to the machine. In electro-hydrau-

lic systems the piston is actuated by a hydraulic fluid. Screw displacement is detected by a position transmitter (GT-1). Screw or piston velocity is calculated in the controller. The measured value of the stroke (position) and the integrated value of the preset velocity are compared. The first control loop actuates a hydraulic servo valve and allows more or less hydraulic fluid into the actuator cylinder. Hydraulic pressure is measured by a pressure transmitter (PT-2) and when the preset value is reached the controller switches from velocity to pressure control. After the mould is filled with plastic melt, pressure has to be decreased to avoid harmful stress in the product. The loading or holding pressure is measured with a transmitter (PT-3) and controlled by the third control loop with the aid of the counterpressure in the actuating cylinder.

The pressure vs. time diagrams in Fig. 4.46 provide a good picture of the injection moulding process. The filling step begins with the start signal from the timing control system. The injection stroke is set, with a gap before the end point to avoid overfilling. The internal pressure increases rapidly and on reaching a preset value the controller switches from velocity control to pressure control. In the compression phase, complete filling of the mould is finished. After reaching peak

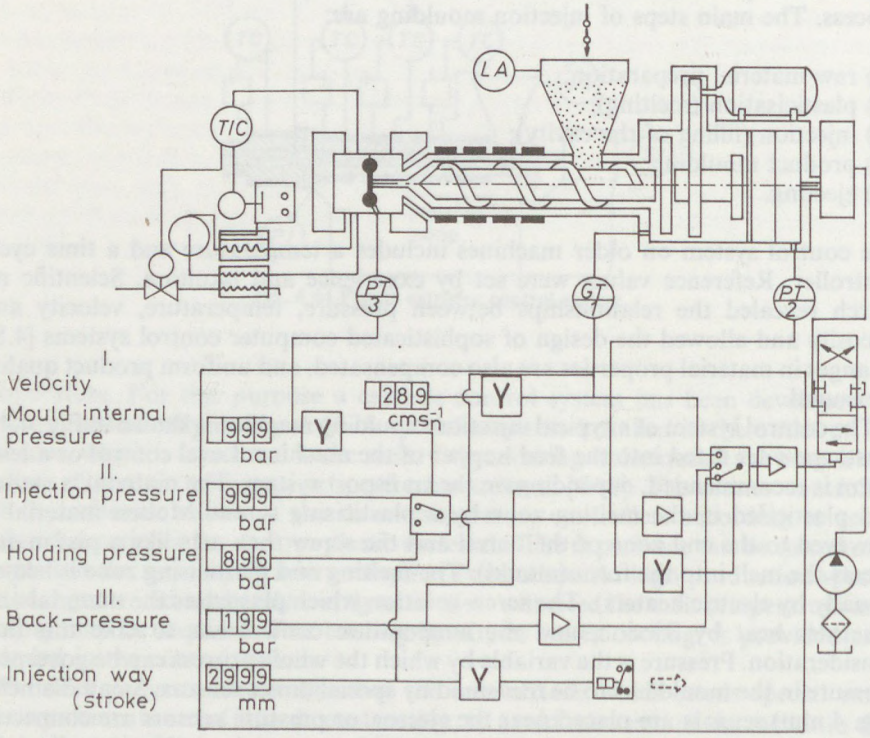


Fig. 4.45 Injection moulding machine control system. Loop I: ram velocity; loop II: hydraulic pressure, mould pressure; loop III: backpressure, injection way

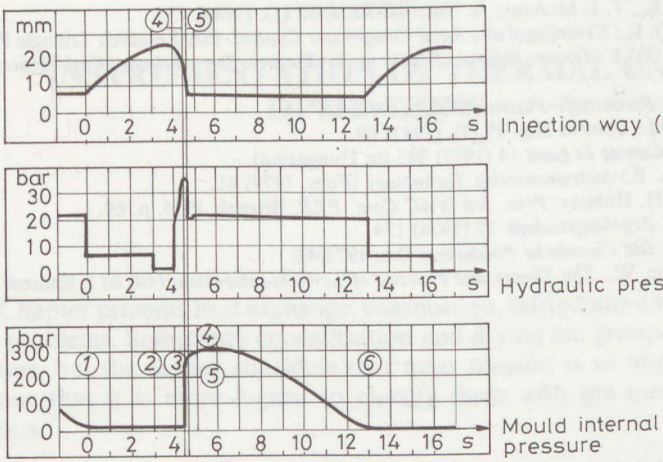


Fig. 4.46 Time vs. pressure diagrams of the moulding process. *1* start filling with controlled backpressure; *2* end filling, preset value attained; *3* start injection with controlled velocity; *4* highest injection pressure, compression by controlled pressure; *5* fast increase of internal pressure and switching from injection pressure control to holding pressure control; *6* after solidification, switching from holding pressure to backpressure, ready to start filling

pressure the plastic material begins to cool and shrink. If there is a difference between actual and desired pressure profiles, the control system corrects the pressure via the hydraulic piston. Automatic ejection is initiated by the controller. The temperature controllers are similar to those already described in Section 4.6.3. The large number of variables and complicated interaction justify the application of a control computer. Numerical control equipment in the machine tool industry is highly sophisticated and cost effective CNC systems are available. These systems have been adapted to plastics injection moulding machines and CNC equipment is available (e.g. Battenfeld, Germany). Computer application may also be involved in production planning.

One of the few places in the chemical process industry where robots have been successfully applied is plastics moulding and plastics pressing. The hot plastic pieces are removed and manipulated by robots.

## REFERENCES

[4.1] Allerdisse, W.: *Regelungstech. Prax.* 17 (1975) 266.
[4.2] Baumann, H. D.: *Chem. Eng.* 88 (1981) Jan. 29.
[4.3] Blickley, G. J.: *Control Eng.* 32 (7), (1985) 61.
[4.4] Boeck, Th., G. Kötle: *CPP Ed. Europe* 1988 March, p. 45.
[4.5] Fischer, K. A., D. J. Leigh: *Instrum. Control Syst.* 56 (3), (1983) 45.
[4.6] Hall, J.: *Instrum. Control Syst.* 54 (6), (1981) 51.
[4.7] Hogrefe, W.: *Regelungstech. Prax.* 24 (12), (1982) 411.
[4.8] Käufer, H., R. Hüppe: *Plastverarbeiter* 34 (3), (1983) 213.
[4.9] Keller, P.: CH–IG 112271 D. BBC A. G. Baden, Lab. for Appl. Physics and Measurement.
[4.10] Kessler, G., G. Bradenburg, W. Schlosser: *Regelungstechnik* 32 (8), (1984) 251.

[4.11] McDonald, K., T. I. McAroy, A. Tits: *AIChE J.* 32 (1), (1986) 75.
[4.12] McMillan, G. K.: *Centrifugal and Axial Compressor Control.* ISA Research Triangle Park, 1984.
[4.13] Menges, H. (Ed.): *Messen, Steuern, Regeln in der Kunststoffverarbeitung.* Carl Hanser, Munich 1976.
[4.14] Menges, H.: *Kunststoffe-Plastics* 29 (4), (1982) 16.
[4.15] Morris, H. M.: *Control Eng.* 29 (7), (1982) 69.
[4.16] Nagy, I.: *Műanyag és gumi* 14 (1977) 285 (in Hungarian).
[4.17] Nisenfeld, A. E.: *Instrumentation Technology* (Febr. 1979) 41.
[4.18] Révész, H., H. Hubeny: *Proc. 3rd IFAC Conf. PRP,* Brussels 1976, p. 69.
[4.19] Schulze, H.: *Regelungstechnik* 22 (1974) 174.
[4.20] Siemers, H.: *Die Chemische Production* Oct. 1973/42.
[4.21] Van de Kamp, W.: *The Theory and Practice of Level Measurement* (4th ed.). Endress & Hauser 1988.

CHAPTER 5

# INSTRUMENTATION OF THERMAL UNIT OPERATIONS

This Chapter presents heat exchange, combustion, refrigeration and evaporation control problems. Sometimes crystallisation and drying are grouped with thermal operations, but the author considers that mass transfer is so important in these operations that it is more logical to classify them with the mass transfer unit operations.

## 5.1 PRINCIPLES OF HEAT TRANSFER AND TEMPERATURE CONTROL

The objective of heat transfer equipment control is mostly to maintain the temperature of the process fluids between preset limits. In some applications heat flow measurement and control are required. Monitoring the optimum heat exchanger cleaning cycle is another important goal for this class of instrumentation.

All the objectives mentioned above are connected with temperature measurement. The importance of temperature measurement is indicated by the fact that roughly 50% of all sensors in the chemical industry are temperature sensors. Proper location of the sensors is essential for the minimisation of static and dynamic errors of measurement, thus improving the temperature control. Protecting tubes are used to shield the sensors from corrosive and high pressure fluids, erosion and mechanical damage. Heat transfer conditions, heat conduction and heat capacity of the protecting tube and sensing elements determine the time lag

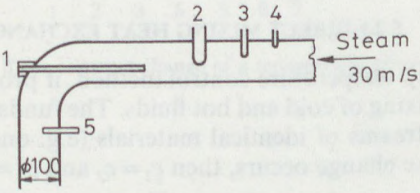


| Thermometer | 1 | 2 | 3 | 4 | 5 |
|---|---|---|---|---|---|
| Measured temperature °C | 386 | 385 | 384 | 371 | 341 |
| Absolute error | 0 | +1 | +2 | +15 | +45 |

Fig. 5.1 Effect of sensor location

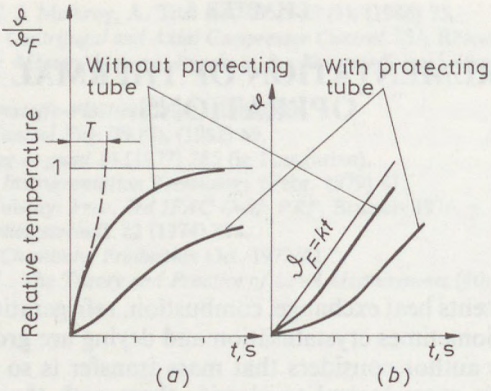


Fig. 5.2 Time response of temperature sensors. (*a*) step change; (*b*) ramp change

and error of temperature measurement. Static error due to sensor location is illustrated in Fig. 5.1, which shows sensors at five different locations, in identical protecting tubes of different lengths, together with the results of the measurements. Dynamic errors of temperature measurement have been demonstrated in Section 1.3 (Fig. 1.7), and the effect of a protection tube is shown in Fig. 5.2 for step (*a*) and ramp (*b*) functions. In Table 5.1 the time constants of different sensing elements are indicated (for definition of the constants see Section 1.3). The effect of fluid flow velocity on the time constant is illustrated by the diagram of Fig. 5.3. Exact calculation methods can be found in the literature [e.g. 3.19]. In temperature control loops not only the sensors but also the controlled equipment usually have large time constants because of heat capacity and dead time. In addition, heat transfer coefficients may change with elapsed time. Heat transfer surfaces are fouled in most of the cases and this makes exact temperature control difficult.

## 5.2 CONTROL OF HEAT EXCHANGERS

### 5.2.1 DIRECT MIXING HEAT EXCHANGE

A simple and cheap temperature control method, if process conditions allow its application, is the mixing of cold and hot fluids. The fundamental scheme is shown in Fig. 2.6. If two streams of identical materials (e.g. one hot and one cold) are blended and no phase change occurs, then $c_1 = c_2$ and $\varrho_1 = \varrho_2$. The enthalpy of the stream is

$$Q = c\varrho B\vartheta, \tag{5–1}$$

where $c$ — specific heat;
$\varrho$ — density;
$B$ — volume flow, and
$\vartheta$ — temperature.

Table 5.1. Time constants of temperature sensors (measured between 20–40 °C)

| Fluid | Values in seconds | | | |
|---|---|---|---|---|
| | Air* | | Water** | |
| Time constant, $T$ | 0.5 | 0.9 | 0.5 | 0.9 |
| Mercury in glass ∅ 6.12 mm | 48 | 150 | 2.4 | 6.2 |
| Mercury in glass ∅ 6.38 mm | 43 | 120 | 2.0 | 5.6 |
| the same in ∅ 10 mm tube | 121 | 350 | 23 | 77 |
| Alcohol in glass ∅ 6.38 mm | 43 | 125 | 5.2 | 17.3 |
| the same in ∅ 12 mm tube | 200 | 500 | 81 | 215 |
| Manometric thermometer mercury, ∅ 17 mm with ∅ 22 mm tube | 340 | 1090 | 72 | 224 |
| Vapour pressure ∅ 17 mm with ∅ 22 mm tube | 380 | 1280 | 85 | 260 |
| Thermocouple | | | | |
| insert ∅ 6 mm | 45 | 160 | 0.3 | 1.2 |
| insert ∅ 8 mm | 50 | 175 | 1.1 | 3.2 |
| with ∅ 11 mm protecting tube | 135 | 400 | 19 | 75 |
| with ∅ 14 mm protecting tube | 148 | 460 | 21 | 80 |
| enamelled protecting tube | 280 | 740 | 80 | 265 |
| Resistance thermometer | | | | |
| insert ∅ 6 mm | 72 | 220 | 6.2 | 16 |
| protecting tube ∅ 11 mm | 175 | 535 | 42 | 113 |
| room thermometer | 140 | 1050 | | |

*Note:* * Velocity 1 m/s
** Velocity 0.2 m/s

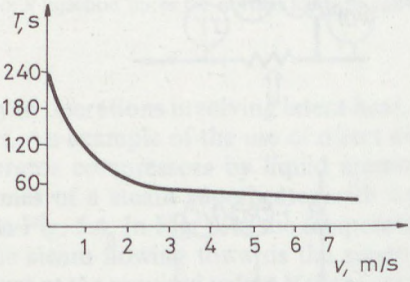


Fig. 5.3 Time constant change of a temperature sensor

Thus

$$\vartheta_o = \frac{\sum_{i=1}^{n} c_i \varrho_i B_i \vartheta_i}{c_o \varrho_o B_o}, \tag{5–2}$$

where suffixes $i$ and $o$ denote inflow and outflow and the relevant values are calculated with the standard mixing rules.

With no phase change, no chemical reaction equal specific heat and density, and negligible heat of mixing temperature calculation is relatively easy and steady-state temperature determination is sufficient. With these simplifications, the controlled temperature is

$$\vartheta_0 = \frac{B_h \vartheta_h + B_c \vartheta_c}{B_h + B_c} = \vartheta_c + \frac{B_h}{B_h + B_c}(\vartheta_h - \vartheta_c), \tag{5–3}$$

where $h$ and $c$ denote hot and cold.

This shows that the relationship between controlled and manipulated variables is non-linear and the process gain will change with flow. Because of the interaction between total flow and manipulated flow, decoupling by the use of a three-way mixing valve may be recommended. If the heat capacity of the mixing vessel is involved, then dynamic behaviour has to be considered. Direct heat transfer is

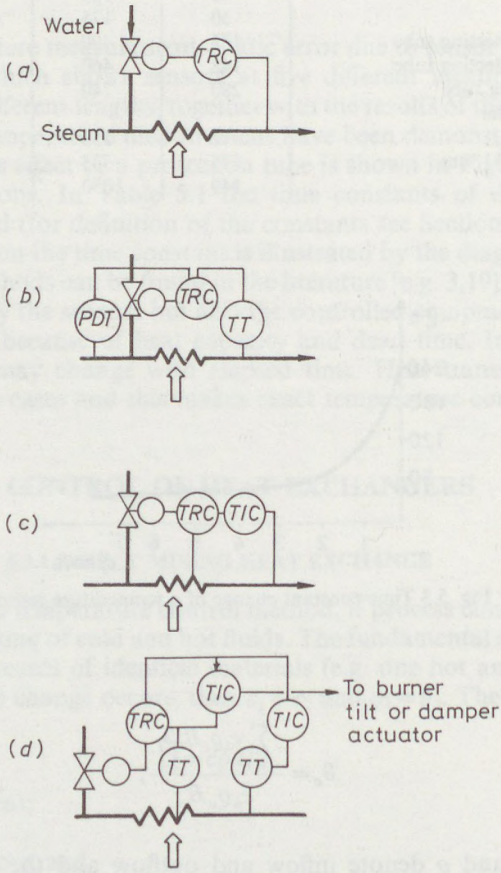


Fig. 5.4 Steam superheater control schemes

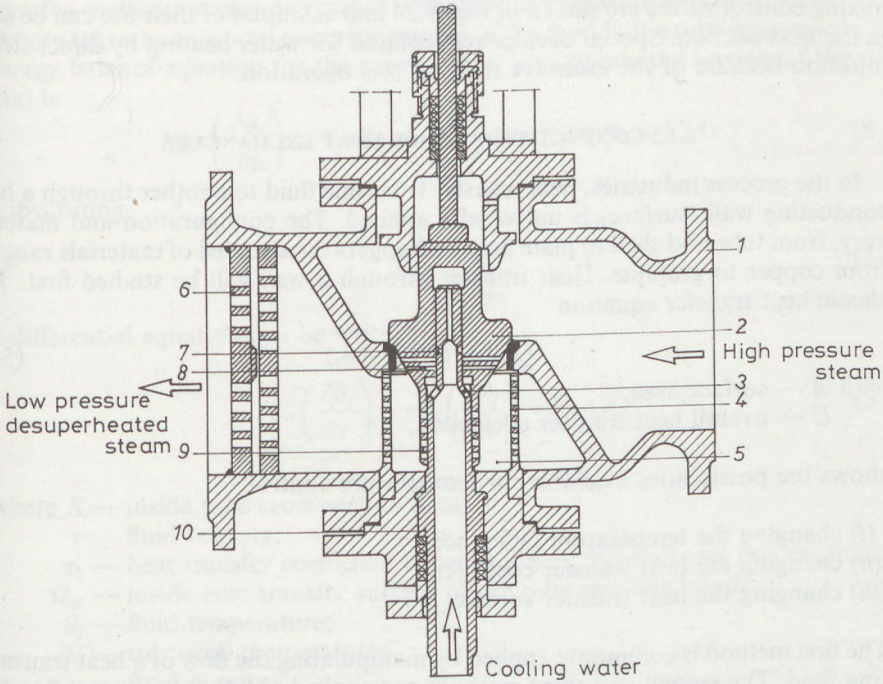


Fig. 5.5 Desuperheater mixing valve (Hannemann). *1* valve body; *2* parabolic valve plug; *3* holes for cooling water; *4* perforated basket; *5* mixing space; *6* perforated discs; *7* valve seat; *8* injection bores for low load; *9* injection bores for normal load; *10* cooling water pipe

applied very effectively in operations involving latent heat, as in jet condensers and in direct steam heaters. An example of the use of direct evaporation is the recycle gas cooling of refrigerator compressors by liquid ammonia injection. The temperature control schemes of a steam superheater with water injection cooling is shown schematically in Fig. 5.4. In Fig. 5.4*a* the temperature controller manipulates water flow into the steam flowing towards the superheater coils to maintain outlet steam temperature at the required value. If there are significant disturbances, the large time constant due to the distance velocity lag may cause problems and another scheme should be applied. Under such circumstances the feed-forward/feedback control is recommended as shown in Fig. 5.4*b*. The superheater construction might require the temperature cascade control shown in Fig. 5.4*c*. Water injection can be combined with burner tilt control or damper actuator control to manipulate the heat input to the superheater [5.3]. This scheme is shown in Fig. 5.4*d*.

Special mixing control valves are available for pressure reducing and desuperheating service (see Fig. 5.5). These valves have a pressure reducing section and a water injection and mixing section, and some types are combined with safety relief valves which may reduce the capital cost of the system by 30 to 40%. Three-way

mixing control valves are shown in Fig. 9.24 and examples of their use can be seen in the next Section. Special devices are required for water heating by direct steam injection because of the excessive noise of this operation.

### 5.2.2 CONTROL OF SURFACE HEAT EXCHANGERS

In the process industries, heat transfer from one fluid to another through a heat conducting wall (surface) is universally applied. The configuration and material vary, from tube and shell to plate heat exchangers constructed of materials ranging from copper to graphite. Heat transfer through a wall will be studied first. The classic heat transfer equation

$$Q = A \cdot U \cdot (\vartheta_1 - \vartheta_2) \tag{5–4}$$

with $A$ — surface area,
$U$ — overall heat transfer coefficient,

shows the possibilities available for temperature control:

(*i*) changing the temperature difference;
(*ii*) changing the heat transfer coefficient;
(*iii*) changing the heat transfer surface.

The first method is commonly applied by manipulating the flow of a heat transmitting fluid. The second and third methods are applied together by partial flooding of the heat transmitting surface.

In order to obtain an insight into the dynamic behaviour of surface heat exchangers, a simple tube-in-tube steam heated apparatus is illustrated in Fig. 5.6, together with the temperature profile curves. Temperature control is achieved by manipulating the steam flow, which affects the condensing temperature and results in a change in the temperature difference (method (*i*) above).

The dynamic behaviour of the process fluid outlet temperature can be calculated on the basis of the following simplifications. The time lag between control valve actuating signal and pressure change in the shell is neglected. Condensing steam on the outer surface of the tube itself has a heat capacity, which is neglected. Heat

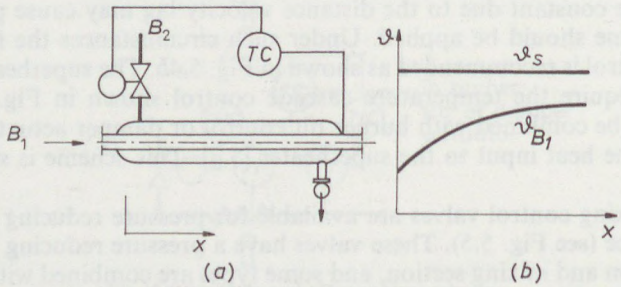


Fig. 5.6 Steam heated heat exchanger. (*a*) equipment; (*b*) temperature diagram

transfer coefficients vary somewhat with flow, temperature and other conditions, but are taken as constant; complete mixing of the fluid in the tube is assumed. The energy balance equation for the process fluid in a differential section of the tube (d$x$) is

$$S\varrho c\left(\frac{\partial \vartheta_f}{\partial t}\right)\mathrm{d}x + vS\varrho c\left(\frac{\partial \vartheta_f}{\partial x}\right)\mathrm{d}x = \alpha_1 \Omega_H(\vartheta_w - \vartheta_f)\mathrm{d}x\,. \tag{5–5}$$

Substituting

$$T_1 = \frac{S\varrho c}{\alpha_1 \Omega_H} \tag{5–6}$$

a differential equation can be written

$$T_1\left(\frac{\partial \vartheta_f}{\partial t}\right) + vT_1\left(\frac{\partial \vartheta_f}{\partial x}\right) = \vartheta_w - \vartheta_f, \tag{5–7}$$

where $S$ — inside tube cross-section area;
$v$ — fluid velocity;
$\alpha_1$ — heat transfer coefficient between inner tube wall and process fluid;
$\Omega_H$ — inside heat transfer surface of the tube per unit length;
$\vartheta_f$ — fluid temperature;
$\vartheta_w$ — tube wall temperature;
$\varrho$ — fluid density;
$c$ — specific heat of the fluid.

A similar equation can be written for the tube, etc. For the solution to this set of equations we refer the reader to the literature [2.18], [3.19]. The number of papers dealing with heat exchanger dynamics is very large. Publications from the early days of process dynamics development e.g. those by Aikman (1956), Mozley (1956), Campbell (1958) and Thal-Larssen (1959) should be mentioned first, followed by the publications of Schöne (1962) and Thomasson (1964). The results of newer investigations have been given in Refs [5.9], [5.11]. It has to be mentioned that under unfavourable conditions temperature oscillation and unstable control can result from fluctuating heat input.

Control schemes for typical shell and tube bundle heat exchangers are shown in Fig. 5.7. A straightforward method is to place a control valve in the supply line of the heating (cooling) fluid and manipulate the flow. Increasing flow rate increases the temperature difference and vice versa (see Figs 5.6, 5.7*a*). The relationship between the manipulated flow and transferred heat (outlet temperature) is nonlinear, and both time constants and gain vary with flow rate, this will affect control loop performance. If poor control quality cannot be tolerated, other control schemes should be applied. Feed-forward and feedback control is applied to eliminate the effect of disturbances, as illustrated in Fig. 2.10. In the case of large time constants when fast control is important and the desirable quality of control cannot be reached, bypass control can be of help. This method eliminates the time lag by directly mixing the cold (or hot) process fluid with the outlet stream of the

heat exchanger (see Fig. 5.7*b*). The flow resistance of the heat exchanger is connected in parallel to the resistance of the control valve, and this may cause difficulties in control. Installation of three-way control valves, as already mentioned previously in connection with direct heat exchange, can overcome these difficulties. Two types of valves can be applied, the dividing valve (Fig. 5.7*c*) where a fluid of uniform temperature is flowing through the valve, or the mixing valve with different temperature in all three ports (Fig. 5.7*d*). If great temperature differences or large quantities have to be handled, and three-way valves are very expensive or not available, then two standard valves have to be installed (Fig. 5.7*e*). These valves work in opposite senses and a linear characteristic is recommended.

Bypass controll of the heating or cooling fluid is used if total flow throttling is not allowed. This is the case with reactor inlet–outlet heat recovery heat exchangers, or with hot oil heat transfer. It must be mentioned that this method is applicable only with homogeneous fluids with no phase changes. Economic and operating consideratons have led to the cascaded version of the bypass control shown in Fig. 5.8*a*. The master controller is a standard temperature controller which manipulates a three-way valve. The valve has an optimal position, representing the minimum bypass flow with a safety margin. This valve position is the set point of the second-

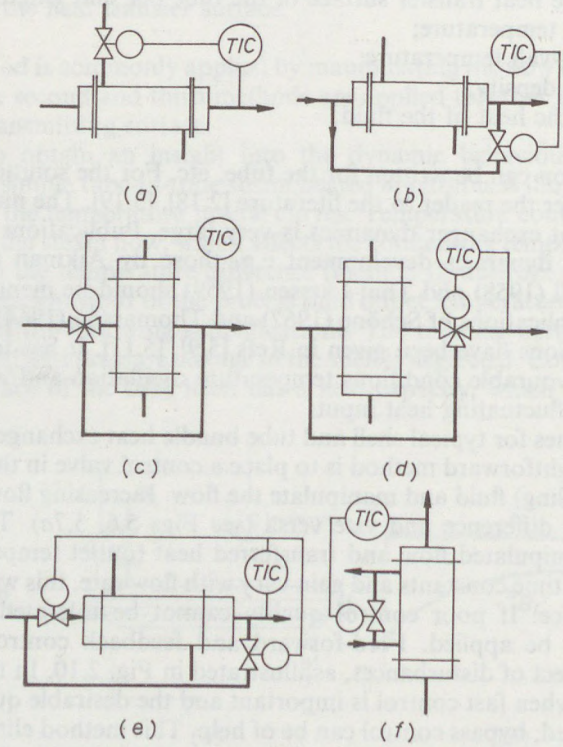


Fig. 5.7 Heat exchanger control schemes I

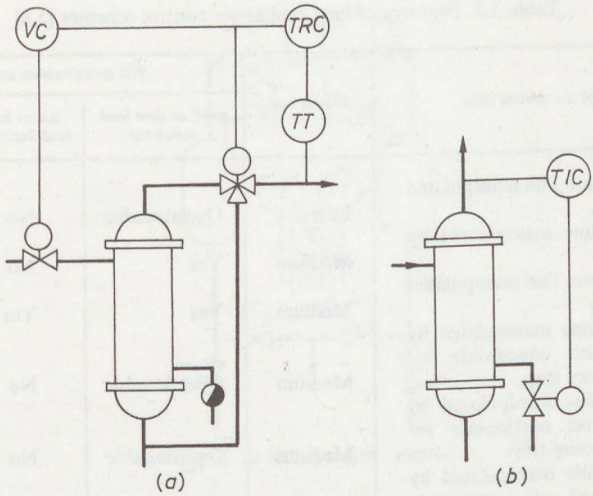


Fig. 5.8 Heat exchanger control schemes II

ary controller. This valve position controller manipulates the steam flow through a control valve in such a way that the three-way valve maintains its optimal position. The quality of control is maintained by the quick-acting master controller, and economy is restored by the valve position controller. An alternative method of heat exchanger control is the flooding of a part of the heating surface. Application of this method is restricted to systems where a phase change is utilised. Figure 5.8*b* shows such a steam heated heat exchanger control scheme. We have seen that systems working on temperature difference control principles use the whole surface of the equipment and condensate is removed to maintain the liquid level below the lowest point of the equipment. A steam trap or a condensate pot with level controller is used (see Figs 5.6 and 5.8). Flooding a part of the heat exchanger surface, by the condensation of steam or other vapours, is prohibited in these systems. Heat transfer through the flooded surface is very poor, and negligible compared to the condensation zone. Flooding control is applied is refrigerating systems in the opposite sense. The flooded part of the surface is covered with boiling liquid and is a very effective transmitter of heat. The heat transfer coefficient of boiling liquids is large compared to the 'dry' part of the surface, where vapour superheating takes place with negligible heat transmission. Flooding control has the advantage of requiring small control valves in the liquid lines instead of large valves in the vapour line. Its disadvantage is its asymmetric operation. Draining of condensate is rapid when the valve is opened, but the filling speed depends on the condensation rate. Similarly, filling with refrigerating liquid is fast when manipulated by the control valve, but lowering the liquid level depends on the boiling rate. Overfilling protection is always recommended.

Table 5.2 presents a comparison of control schemes after B. Lipták [5.8]. Air coolers are a special group of heat exchangers. They provide an economical way

Table 5.2. Features of heat exchanger control schemes [5.8]

| Location of the control valve | System cost | Will give precision control under | | |
|---|---|---|---|---|
| | | small or slow load variations | fast or large load variations | low condensing pressure |
| Valve in condensate line manipulated by temperature | Low | Questionable | No | No |
| Valve in steam line manipulated by temperature | Medium | Yes | No | No |
| Two valves in steam line manipulated by temperature | Medium | Yes | Yes | No |
| Valves in steam line manipulated by temperature and condensate removed by drainer trap | Medium | Questionable | No | Yes |
| Valve in steam line manipulated by temperature and condensate removed by pumping trap | Medium | Questionable | No | Yes |
| Valve in steam line manipulated by temperature and condensate removed by level controller | High | Yes | No | Yes |
| 3-way valve controls temperature in bypass line and steam inlet is controlled to maintain condensing pressure | High | Yes | Yes | Yes |

of cooling process streams where cooling water is rare and expensive. One control problem with air coolers, as compared to water coolers is the rapid change of cooling fluid temperature. Cooling water temperature is fairly stable over a day or a season, and even the annual variation lies between $\pm 6°C$. The ambient temperature of the air changes considerably during the course of a day, and may change rapidly during a shower; the annual variation in some regions is $\pm 40°C$. Temperature control is effected by louvres or variable pitch fans or variable speed fan drives. Fig. 5.9 shows a combined control system. A constant velocity motor turns a fan, which forces air through a finned heat exchanger. The temperature controller of the outlet process stream manipulates the air flow by fan pitch.

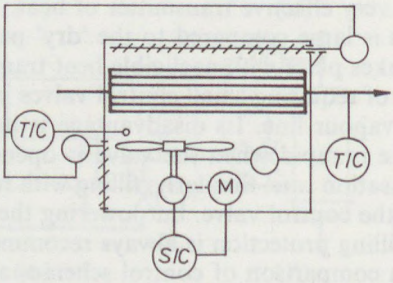


Fig. 5.9 Air cooler control

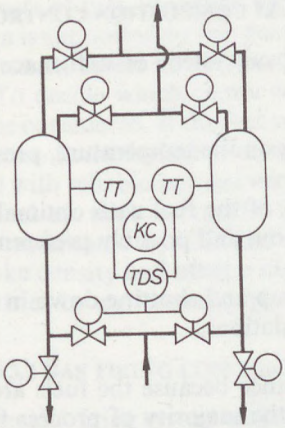


Fig. 5.10 Recuperator control

Bypass stream or louvre controller is used if freezing of the process stream has to be avoided. An interactive louvre control system uses a nonlinear controller and manipulates the louvre position to achieve the fan pitch middle position in the steady state [5.12]. Some air coolers are equipped with variable speed fan drives.

### 5.2.3 CONTROL OF RECUPERATORS

Heat exchangers with solid material filling and intermittent gas heating and cooling are called recuperators or regenerators. The largest recuperators are used in the iron and steel indrustry (Cowpers). In the chemical indrustry, regenerators are applied in air separation plants for preheating or precooling intake air. Fig. 5.10 shows a recuperator control scheme. Low temperature nitrogen from the air separation column is used to cool down one recuperator unit. The other recuperator unit, which has been cooled down in the previous cycle, precools the feed stream of the air seperator. Changeover is effected by automatic valves through a sequential control system. The control signal is the temperature difference between the two recuperator units. In air separation plants, the solid filling of the heat exchanger is an aluminium strip coil with a large specific surface area. A simple time cycle control is also applied in plants where stable operation is guaranteed.

## 5.3 CONTROL OF FURNACES AND HEATERS

Heat energy at high temperature is usually transferred in furnaces. Heat is generated by the combustion of combustible gases, liquids or solid materials. Most furnaces serve to provide heat of reaction to fluids inside the tubes of the furnace, and these can be considered as reactors. In practice most of the technical literature deals with furnaces separately. The heart of a furnace control system is the combustion control subsystem.

### 5.3.1 COMBUSTION CONTROL

The combustion control subsystem of a furnace has to serve the following control objectives:

(*i*) load control, depending on the temperature, pressure or energy requirements of the heated fluid;
(*ii*) economical combustion of the fuel with optimal excess air, draft, atomising and flue gas concentration, and possibly preferential burning of one fuel over another;
(*iii*) safe operation, starting up and shutting down in accordance with local safety and environmental regulations.

Safety has a double importance because the fuels are flammable and potentially explosive materials, and in the majority of process furnaces the material heated inside is flammable or explosive.

A brief survey of the combustion process is useful, in order to understand the control requirements and evaluate control schemes. Fossil fuels and waste products are usually hydrocarbons and are burned with the oxygen of combustion air to CO, $CO_2$ and $H_2O$. A specific theoretical volume of air is necessary to burn the combustibles completely. The inefficiencies of combustion, however, require excess air $\lambda$ to ensure complete combustion. The amount of excess air is a question of

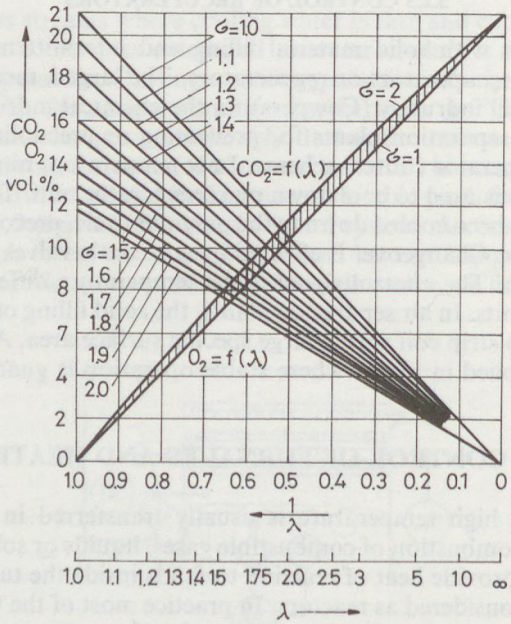


Fig. 5.11 Fuel gas analysis and excess air determination. $\sigma$ a value characteristic of the fuel, e.g. for natural gas $\sigma = 1.9$–2; for fuel oil $\sigma = 1.3$–1.4; for brown coal $\sigma = 1.06$–1.18

economy. Too little means waste of fuel, too much means waste of heat. Monitoring and control of combustion is supported by flue gas analysis. Since the composition of combustion air is constant, excess air can be determined from the $CO_2$ or $O_2$ content of the flue gas. To decide which component should be analysed, the diagram in Fig. 5.11 should be considered. If the fuel composition changes, oxygen content analysis is advantageous. Some fuels (e.g. mixed gas) require $CO_2$ analysis. Good results can be obtained with reliable and not very complex oxygen analysers. Automatic readjustment of fuel–air ratio is possible with an $O_2$ controller. Combustion efficiency should be monitored by CO and combustibles analysis [5.5]. Monitoring of stack gas smoke density and other emission measuring instruments is prescribed in several countries by environment protection law.

### 5.3.2 GAS FIRING CONTROL

Gas firing is the most convenient firing system and its control is well understood. General practice is to use fuel–air ratio control. Some burners have autonomous mechanical ratio controllers, but in large units forced air feed is provided. Ratio control system can be serial, parallel or lead-lag. The serial system uses a ratio controller (see Fig. 2.13), the parallel system applies two flow controllers. For higher safety, selector switches are used in lead-lag systems. An outline of a safe ratio control system is shown in Fig. 5.12. Deficiency of air can allow fuel to accumulate in the furnace, which may explode upon ignition. To prevent this, the master firing rate control signal is connected through high and low signal selectors (fuel and air cross limits). The high signal selector also receives the fuel flow signal as an input, and its output is the set point for the air flow controller. The low signal selector also receives the air flow signal as an input, and its output is the set point for the fuel flow controller. Fuel oil ratio is adjusted through manipulation of the air flow signal by the oxygen content controller. If air flow is lost its measurement signal is preferentially selected to lower the fuel controller's setpoint. When the firing rate signal increases the low signal selector blocks the signal to the fuel flow

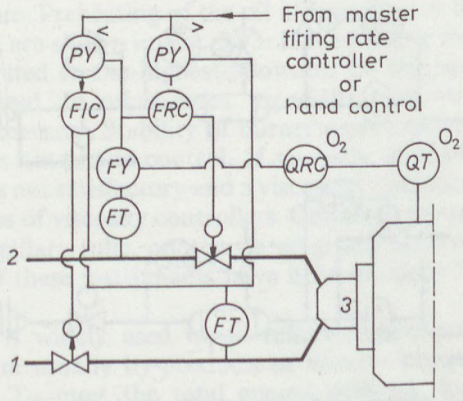


Fig. 5.12 Safe ratio control system. *1* fuel gas; *2* air; *3* burner

controller, but the air flow immediately starts increasing. Thus the air flow increases before the fuel flow increases. When the firing rate demand signal decreases, this control scheme ensures that fuel flow will decrease before air flow decreases [1.8].

Specification of other safety measures such as shut down valves for power failure or fuel feed failure, high furnace temperature, etc., is usually included in the national safety code (e.g. NFRA, USA) and in the regulations of insurance companies. For the protection of personnel and equipment a combustible in-air gas alarm instrument is usually required (ex-alarm system). When the composition of the fuel gas is not stable, as with waste gas firing, analysis of the fuel gas is recommended. Gas calorimeters are applied to measure calorific value and correct fuel flow. Combustion depends not only on calorific value, but on the burning properties of the gas. Special instruments for the measurement of the Wobbe index are available. The burning speed can be measured by determination of the flame cone height, and this can be used for control.

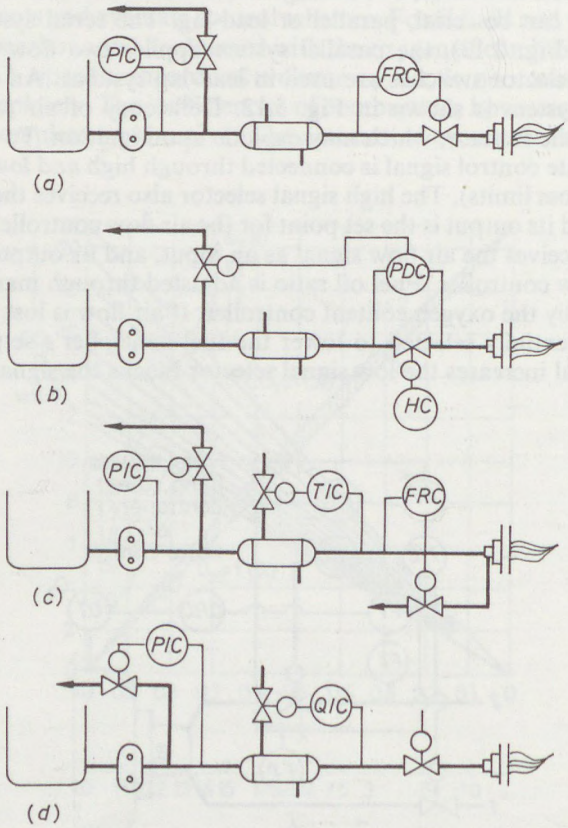


Fig. 5.13 Oil burner control schemes. (*a*) flow control; (*b*) hand control; (*c*) control of a recirculating type burner; (*d*) viscosity control

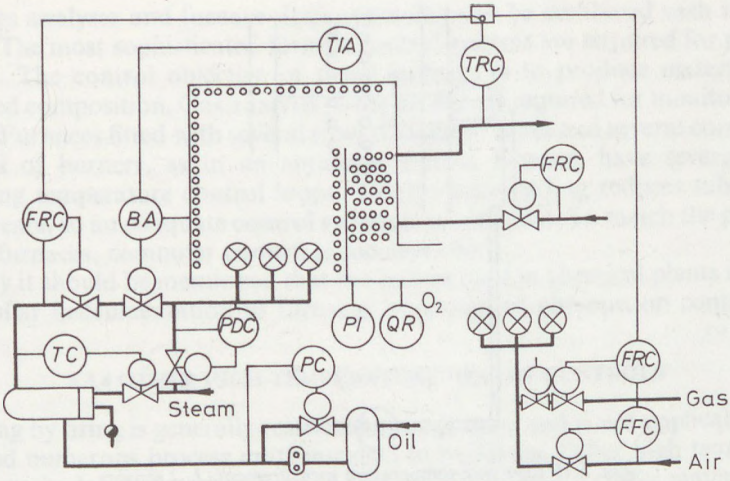


Fig. 5.14 Pipe still control scheme for mixed fuel

### 5.3.3 FUEL OIL AND MIXED FUEL FIRING CONTROL

Oil burners are usually delivered with automatic firing control and this has to be incorporated into the furnace control system. The operating range of oil burners depends on their construction. Rotating disc atomisers provide ranges from 1 : 10 to 1 : 20. Pressure and steam atomising devices have ranges from 1 : 3 to 1 : 7. If greater load changes have to be matched, the number of burners operating may be varied by on–off control. Fuel–air ratio control is similar to the systems already described. Safety measures are more specific, and also subject to regulation. The greatest difference between gas and oil firing is in the temperature and viscosity control of the fuel. Fuel oils are generally of high viscosity and do not flow easily at ambient temperature. Preheating of the oil is necessary. A few control schemes for oil burner control are shown in Fig. 5.13. If the heating medium is steam and its temperature is limited to the highest allowable oil temperature, temperature control may be omitted. In other cases, especially with electric heating, temperature control is necessary. Stability of burner performance may need a stable temperature and thus automatic control. If viscosity of the fuel oil is variable, temperature control is not satisfactory and a viscosity controller has to be installed. There are several types of viscosity controllers. One large group measures differential pressure on a capillary tube, another large group is formed by the rotating viscometers. Some of these instruments have been developed specially for firing control.

Mixed fuel firing is widely used in oil refineries and petrochemical plants. Combustible gases are usually by-products of various processes and should be burnt preferentially. To meet the total energy demand, fuel oil is used as a complementary energy source. The control scheme for a crude heater–vaporiser

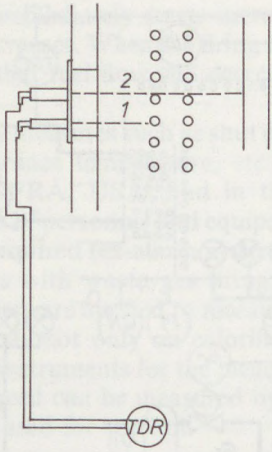


Fig. 5.15 Pipe wall temperature measurement. *1, 2* sensors

s.c. a pipe-still is presented in Fig. 5.14. The pipe still is fed with one or possibly several flow controlled streams. Flow below a minimum value may result in overheating, so a low flow alarm is necessary. The control objective is to maintain a constant outlet temperature, therefore a master temperature controller is installed. This controller delivers a set point to the slave fuel flow controllers and can be switched according to the operation mode. In the scheme it is connected to the oil burner system, fuel gas being fed at constant flow or constant pressure principles. The oil is preheated by steam and its temperature and pressure are controlled. Fuel oil is atomised by steam under a constant pressure difference which is maintained by a pressure difference controller. Combustion air is controlled by furnace draft by means of louvre manipulation. Flame detectors are applied to stop firing in the case of a flame failure (burner flameout). A high temperature alarm and shutdown system protects the furnace in the case of a pipe rupture which causes hydrocarbon leakege into the firebox. Measuring the pipe wall temperature in a furnace is a difficult task. The fixing of thermocouples is complicated, not to mention the connecting leads. Optical measurement is possible, but the optical pyrometer does not measure the radiation from the pipe walls only; the reflected radiation of the furnace wall influences the temperature measurement. A special arrangement is shown in Fig. 5.15, with two optical pyrometers. One measures the radiation coming from the pipe wall, the other measures radiation between pipes. The difference of the measured values represents the true pipe wall temperature. Combustion is monitored by flue gas analysis. Other measurements such as pressure, temperature and level are not shown in the Figure.

On the right-hand side of Fig. 5.14 the gas firing part of the system is shown. This uses elements which have already been dealt with. A safety shutdown valve is connected to the general safety system. Gas, combustion air or instrument air failure are detected by pressure or flow alarms and the safety system is actuated.

A flue gas analyser and furnace draft controller can be combined with the firing control. The most sophisticated furnace control systems are required for pyrolysis furnaces. The control objective of these furnaces is to produce materials of a prescribed composition. Gas analysis of the product is required for monitoring and control. Furnaces fitted with several rows of catalyst tubes and several corresponding rows of burners, as in an ammonia reform furnace, have several highly interacting temperature control loops. Temperature cycling reduces tube life by several years, so an adequate control system is economical. To match the problems of such furnaces, computer control is recomended.

Finally it should be mentioned that the boilers used in chemical plants are fitted with similar instrumentation to furnaces in respect of combustion control [5.3].

### 5.3.4 OTHER HIGH TEMPERATURE HEATER CONTROLS

Heating by firing is generally restricted to large units and is not applicable to the small and numerous process units installed in buildings. Other high temperature heating methods are electrical heating and the use of heat transfer materials (e.g. Dowtherm). High pressure steam is applied in some cases, but the possible danger and need for high pressure equipment, piping and fittings usually prohibit its use.

*Control of electrical heating*

Electrical heating may be direct or indirect, and its control can be continuous or discontinuous (on–off). Electrical heating can be of the resistance or of the induction type. Heating resistances are installed in groups and the temperature controller switches one or more groups on or off. This is the simplest method of controlling temperature with on–off controllers. The heat capacity of the equipment and heated material is usually large enough to avoid significant fluctuations of the controlled temperature.

If the material of the process equipment is suitable, induction heating can be applied. Induction coils are wound around the process equipment and eddy currents are induced in the walls of the equipment. The advantages are better heat distribution and a lower danger of hot spots. On–off temperature control is possible. AC feed is required, as opposed to resistance heating where both AC or DC current may be used.

Exact temperature control may need a continuously changing energy flow. Alternatively, current can be manipulated semicontinuously with a thyristor controller. There are several modes of control, from 'chopping' a part of a sine wave to the reduction of the number of sine waves. Continuous voltage control is another possibility for temperature control. Indirect electrical heating is used if a good heat distribution is required. Uniform heat transfer is achieved by using a heat transfer fluid which is heated by an electric resistance heater. The heat capacity of the system has to be taken into consideration, and cascade control may be necessary. Heat transfer fluids have a low to medium vapour pressure at high temperatures.

*Control of indirect heating system*

The most common heat transmitting material in the chemical industry is oil. Because of its limited applicability, several other heat transfer materials are applied. A mixture of diphenyl and diphenyl oxide called Dowtherm* or Diphyl** is well known. This can be used as liquid or as vapour, in a similar way to water and steam but at considerably lower pressure. Instruments and control valves for Dowtherm systems have to be specified for this service. Control valves without packing (with membrane seal) have to be installed. The same is true for level gauges and transmitters. With Dowtherm vapour heating, special precautions have to be taken to prevent condensate backflow and boiler emptying. The fluid burns or decomposes under certain circumstances. For high temperatures, liquid phase heat transfer silicones are used. Tetra-aryl silicate (TAS) is a known heat transfer medium for use at about 300°C. Control systems for the heat generator are similar to the standard furnace control systems. Care has to be taken in respect of expansion and vapour separation equipment. Thermal shock during the heating up of the equipment should be avoided by installing an adequate control system (e.g. Fig. 2.17).

## 5.4 CONTROL OF REFRIGERATION EQUIPMENT

The instrumentation and control of unit operations involved in refrigeration are dealt with separately in this book but the importance of refrigeration justifies a brief survey of refrigeration control.

### 5.4.1 CONTROL OF COMPRESSION TYPE REFRIGERATION

It is supposed that the reader is familiar with the refrigeration cycle and its thermodynamic principles. An evaporator acts as a process fluid cooler in the refrigeration system. The instrumentation of an evaporator cooler is shown in Fig. 5.16. The process liquid is forced through the tubes of the cooler and its outlet temperature is controlled by the temperature controller, which manipulates the pressure in the shell of the cooler where the refrigerant is evaporated by the sensible heat of the process liquid. The boiling temperature depends on the boiling pressure in the shell, thus the controller manipulates the temperature difference, a method already mentioned in connection with heat exchanger control. The evaporated refrigerant is sucked by a compressor, which may be damaged if liquid droplets enter the suction side, therefore a safety shutdown has to be provided if liquid is sensed in the suction line. The temperature sensor closes the refrigerant feed control valve manipulated by the liquid level controller. Too low a temperature may cause freezing of the process liquid; this has to be prevented by using a low temperature alarm and shutdown system.

* Dowtherm is produced by Dow Chemical Co. (USA).
** Diphyl is produced by BASF (Germany).

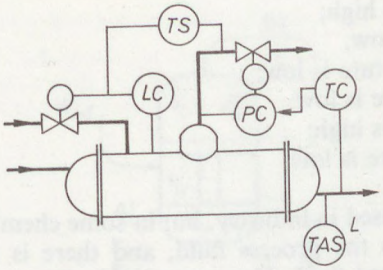


Fig. 5.16 Evaporating cooler control system

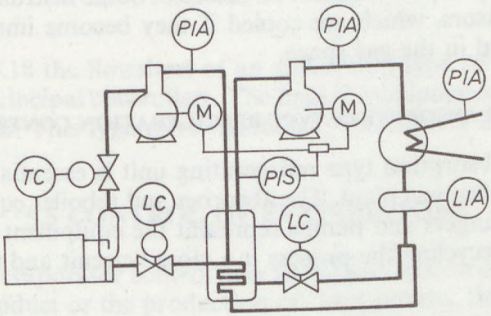


Fig. 5.17 Two stage compressor refrigeration system

The flooding method of temperature control is not very popular because of the increased danger of overflow and contamination of the suction line. It has to be mentioned that instruments and controllers for refrigerating equipment are manufactured by some specialised companies. The controllers work with the energy of the refrigerant, i.e. they are self-operated controllers. Because these controllers are widely used, the control schemes are influenced by their capabilities. This can be seen in Fig. 5.16, too, where the temperature controller is coupled to the pressure controller. This is necessary because a self-operated temperature controller cannot actuate a large control valve. Refrigerating equipment can be operated with several evaporators working at different temperatures. Evaporators of the dry type use expansion valves, while wet type evaporators have a pressure controller in the discharge line. A seperator with level controller is required downstream of wet type evaporators. Multistage equipment is necessary to obtain low temperature refrigeration. Fig. 5.17 shows a two stage compressor refrigeration unit and its instrumentation. A protecting interlock forms part of the refrigerator control system. This prevents the compressor motor starting, or stops the compressor, if safe conditions are not fulfilled. Some of the conditions are:

— second stage compressor is not running;
— intermediate pressure is too high;

— condenser pressure is high;
— process fluid flow is low;
— process fluid temperature is low;
— cooling water pressure is low;
— bearing temperature is high;
— lubricating oil pressure is low.

Several refrigerants are used in industry, but in some chemical plants the refrigerant is the same fluid as the process fluid, and there is no difference between refrigerant and refrigerated fluid. The control objectives and instruments are the same as those already presented.

Special temperature sensors are required for wet type evaporators because immersion in the liquid phase cannot be detected. Some instrument manufacturers provide heated sensors, which are cooled if they become immersed and remain practically uncooled in the gas space.

### 5.4.2 ABSORPTION TYPE REFRIGERATION CONTROL

Control of the absorption type refrigerating unit is essentially the same as the control of a small chemical plant. The absorber and reboiler equipment connected with the heat exchangers and pumps represent the equipment of this plant. As a result of material recycling the process is a closed circuit and its instrumentation

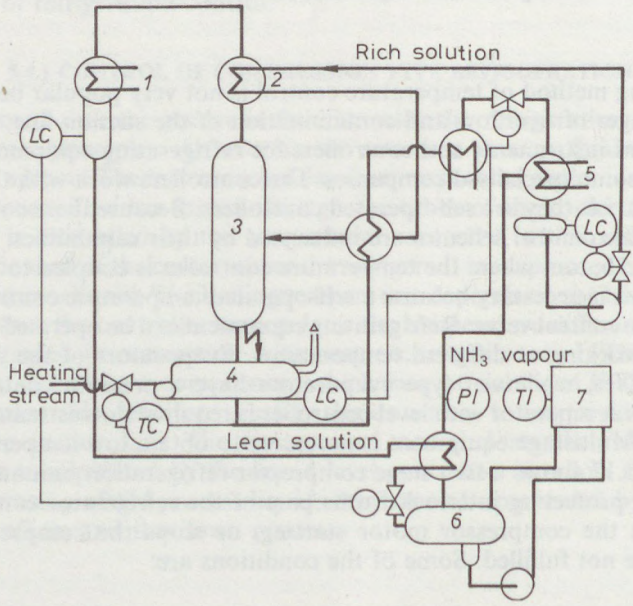


Fig. 5.18 Control of an absorber refrigeration system. *1* liquefying condenser; *2* reflux condenser; *3* rectification column; *4* reboiler; *5* absorber; *6* vapour-liquid separator; *7* air coolers

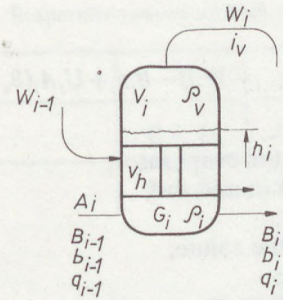


Fig. 5.19 Variables of an evaporator stage

is simple. In Fig. 5.18 the flowsheet of an absorption type refrigerator is shown, together with the principal controllers. The load is manipulated by heating energy input to the reboiler. This type of refrigerator is economical if waste heat is used for its operation.

## 5.5 CONTROL OF EVAPORATORS

The objective of evaporator control may be the production of a specified quality of concentrated product or the production of clean solvent, the latter being water in most cases. Evaporation of the solvent is generally carried out in two or more stages to conserve energy (steam).

### 5.5.1 PROCESS DYNAMICS OF EVAPORATORS

There are several types of evaporators, ranging from short calandria (Robert type) or separated heat exchanger types to long-tube film flow (Kestner type) evaporators. Special falling film and rotating blade evaporators are used for handling heat sensitive materials. Systems for the control of rotating equipment include speed measurement, bearing temperature and vibration checking. To investigate the dynamic behaviour of evaporators as required for control, a short description of the mass and energy balances is presented. A simple sketch of an evaporator is given in Fig. 5.19. In the majority of cases multiple effect evaporators are applied in the chemical and allied industries, but the sketch shows one effect of the calandria type evaporator.

The fundamental equations are [5.10]:

material balance

$$\frac{dG_i}{dt} = B_{i-1} - B_i - W_i, \tag{5–8}$$

solute balance

$$\frac{dG_i b_i}{dt} = B_{i-1} b_{i-1} - B_i b_i, \tag{5–9}$$

heat balance

$$\frac{dG_i q_i}{dt} = B_{i-1} q_{i-1} - W_i i_v - B_i q_i + U_i A_i (\vartheta_v - \vartheta_{li}) - Q_i, \tag{5–10}$$

where $G$ — mass of liquid in the evaporator;
$B$ — mass flow (liquid) in and out;
$W$ — vapour mass flow;
$b$ — concentration of the solute;
$A$ — heat transfer area;
$U$ — heat transfer coefficient;
$Q$ — heat loss;
$\vartheta_v$ — heating vapour(steam) temperature;
$\vartheta_1$ — heated liquid's temperature;
$q$ — enthalpy of the liquid;
$i_v$ — vapour enthalpy.

The rate of evaporation required to convert a feed with concentration $b_{i-1}$ into a specified product with the specified composition $b_i$ can be calculated from

$$W_i = B_{i-1}\left(1 - \frac{b_{i-1}}{b_i}\right). \tag{5–11}$$

The evaporation rate calculated from the heat transfer equation is

$$W_i = \frac{U_i A_i (\vartheta_v - \vartheta_{li})}{i_v - q_i}. \tag{5–12}$$

These equations are based on several simplifying assumptions, such as perfect mixing, negligible vapour holdup, etc. A great number of papers deals with the

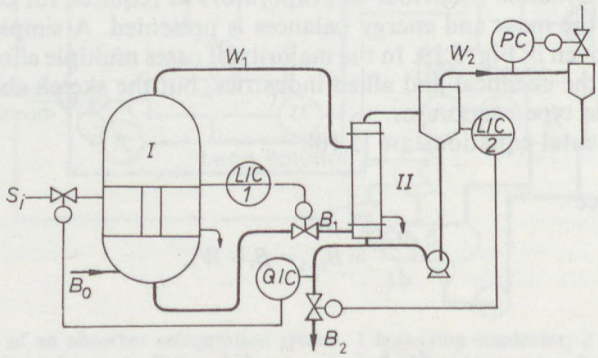


Fig. 5.20 Two effect evaporator system with optimal control scheme

Table 5.3. Evaporator control schemes, variable pairing

| Scheme number | 1 | 2 | 3 | 4 |
|---|---|---|---|---|
| Controlled variable | $Q\ L_1\ L_2$ | $Q\ L_1\ L_2$ | $Q\ L_1\ L_2$ | $Q\ L_1\ L_2$ |
| Manipulated variable | $B_1\ S_i\ B_2$ | $B_2\ B_1\ S_i$ | $B_2\ S_i\ B_1$ | $S_i\ B_1\ B_2$ |

mathematical modelling of evaporators. Both theoretical and empirical approaches have been published. Johnson (1960) and Nisenfeld and Hoyle (1970) have presented empirical models; Marczak (1967) and Zavorka (1967) have presented theoretical models, and André and Ritter have presented a model for a two stage evaporator [5.1].

Determination of the degress of freedom is important and Pleva and Novák [5.10] have developed a search method to calculate the degrees of freedom for evaporators. Balázs and Nagy investigated the relative gain array of double effect evaporators [5.2] one being similar to that shown in Fig. 5.20. An analysis by André and Ritter, mentioned above, proved that there are six alternative control schemes, but only four are worthy of consideration (Table 5.3). They found with the aid of computer simulation and experiments that the scheme shown in Fig. 5.20 gives optimal performance. Three controlled variables and three manipulated variables were taken into consideration.

### 5.5.2 ELEMENTARY CONTROL LOOPS

In dealing with relatively complex systems, it is recommended to investigate first the elements of the system and later use these elements as building blocks in the control system design. Evaporators are of medium complexity and therefore the elementary control loops will be discussed first. The primary control loops in an evaporator are:

— liquid level (or inventory) measurement and control;
— pressure (or vacuum) control;
— composition measurement and control.

*Evaporator level control*

The liquid level affects evaporator performance in two ways. A high level may cause entrainment (carrying away of liquid droplets) and adversely affect the natural thermal circulation. A low level causes low evaporation rate and burn-on of the product. Decomposition of the material, optical changes and explosion hazards may occur.

Level measurement is not easy because the liquid surface is not smooth but rather boiling, bubbling or whirling, and its shape is conical. Floats or displace-

ment type sensors are seldom used, and then only in a float chamber mounted outside. If there is a danger of crystallisation the float chamber has to be heated, but this method is not recommended.

Differential pressure measurement is widely used for level detection. Since evaporators are operating either under pressure or under vacuum the vapour space pressure is measured for correction. Connecting tubes to the vapour side are filled with pure solvent (water) if the ambient temperature is below the condensing temperature. To avoid uncertain measurement and contamination of the filling liquid a pure solvent purge is recommended. The liquid side connecting tube has to be purged to prevent crystallisation and clogging of the tube. Gas purging is also possible, but if the solution inside the evaporator is highly viscous, measurement may be uncertain because of channel formation. Oxidation effects may inhibit the use of an air purge. A special membrane hydrostatic pressure measuring sensor has been developed (MMG-AM, Hungary) with pressure compensation. Radioactive level sensors have been applied with success on certain evaporators.

Stability of the level control depends on the construction of the evaporator; for instance, a small diameter recirculation pipe is not suitable for level sensing because pressure variations cannot be avoided. Level control is usually connected with feed (or outflow) manipulation. Control valve selection and calculation is a delicate task because of the small pressure drop between effects and because the liquid temperature is close to its boiling point. In countercurrent evaporator plants the liquid is transported by pumps and here the pressure difference can be increased. A preheater is installed in some plants before the first stage, for energy conservation. The location of the control valve in the feed line needs careful consideration. Placing the valve in front of the preheater is advantageous because of the cooler liquid and greater pressure, but the flow resistance of the preheater may alter the characteristic of the valve. If the preheater is installed below the evaporator chest and the heating steam has adequate pressure, this location is acceptable. A control valve after the preheater maintains greater pressure in the preheater and thus prevents evaporation in it, but may cause evaporation in the control valve.

### *Pressure measurement and control*

For technical and economic reasons evaporators often operate under vacuum. Measurement of low absolute pressure requires special instruments. Below 1 Pa ionisation (Penning type) instruments or heat conductivity (Pirani type) instruments are used. Absolute pressure transmitters for pressures greater than $5 \times 10^3$ Pa are commercially available. An absolute pressure transmitter has to measure pressure independently of ambient air pressure variation. A simple pressure gauge without compensation cannot serve for stable evaporator pressure control. A variety of absolute pressure control methods are shown in Fig. 5.21. Direct throttling of the vapour line (*a*) is seldom applied with low pressure equipment, because of the large pipe diameter and expensive, usually stainless steel control valve. Figure 5.21*b* shows bleed air pressure control. A control valve manipulates the air flow bleeding into the low pressure system. Here a small diameter control valve may be used with no special construction material requirement. In several

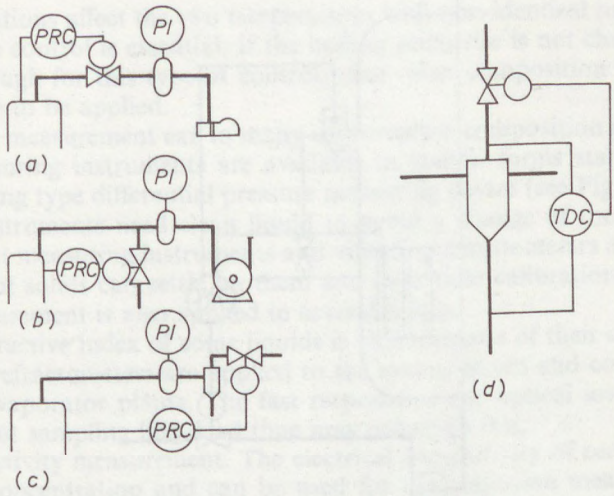


Fig. 5.21 Absolute pressure control schemes

cases where water is evaporated, direct mixing condensers are applied. Pressure control by manipulating the cooling water flow rate is shown in Fig. 5.21*c*. Temperature in the condenser varies with cooling water flow rate and the pressure of the condenser and consequently, in the last effect, it depends on temperature. For energy conservation purpose the temperature of the effluent water in the hotwell is measured, and possibly the temperature difference between the cooling water and effluent is also measured and controlled (Fig. 5.21*d*).

The manipulation of the vacuum pump suction is a possibility which is rarely used. Piston type vacuum pumps would require a speed controller, which is expensive. Water ring vacuum pump manipulation is constrained by the cooling water temperature. Jet type (ejector) vacuum pumps are usually designed to be operated with a single steam flow and with regulated pressure. Manipulation of the suction is usually not possible. Evaporator pressure control through vapour extraction is possible and is used in complex multistage evaporating plants with several different pressure vapour mains. In evaporators operating with vapour compression, pressure control is part of the compression system.

### *Compositon measurement and control*

Measurement of the composition of the product is the principal task of an evaporator control system, but despite of its importance it is rarely solved satisfactorily. There are several methods, each with its advantages and drawbacks. Some of the well established methods will be presented in the following paragraphs.

(*a*) Boiling point elevation measurement uses the phenomenon that the boiling point of a solution is higher than the boiling point of pure solvent (usually water)

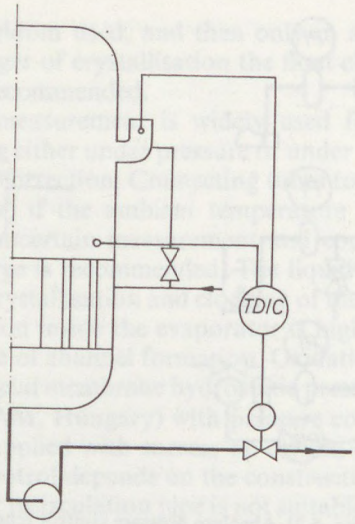


Fig. 5.22 Boiling point elevation measurement

at the same pressure. The difference increases with rising concentration. The relationship is nearly linear, according to Dühring's rule. Three alternatives to this method may be used:

(*i*) temperature measurement at constant pressure;
(*ii*) cascaded measurement of temperature and pressure;
(*iii*) temperature difference measurement.

(*i*) In those evaporators where pressure is maintained precisely constant, the temperature indicates the boiling point and is a measure of concentration. A temperature sensor has to be located so that the measured value is truly representative of the actual concentration. The best place would be just below the liquid surface, but as the level changes this location will change. A good compromise is a location closely above the tube bundle in a calandria type evaporator.

(*ii*) Exact pressure control is unlikely in industrial practice, and therefore pressure compensation is recommended in some systems. A pressure–temperature cascade may be adequate if the nonlinearity of the relationships is small or negligible in the operating range. The set point (reference input) of the temperature controller is compensated by pressure measurement.

(*iii*) An exact boiling point elevation measurement is possible with two temperature sensors and temperature difference measurement. The temperature difference between the boiling solution and the pure solvent is measured. The solvent (water) boiling point measuring sensor is installed in a condensing chamber in the vapour space. In this chamber hot condensate flashes over the sensor at equilibrium temperature, which corresponds to the actual pressure (see Fig. 5.22). Since

pressure variations affect the two temperatures with non-identical time constants, close pressure control is essential. If the boiling point rise is not characteristic or not large enough for this type of control, then other composition measurement methods have to be applied.

(*b*) Density measurement can in many cases replace composition measurement. Density measuring instruments are available in several forms starting with the simple bubbling type differential pressure measuring device (see Fig. 4.29). Buoyancy float instruments need clean liquid to avoid a change of the float weight. U-tube weight measuring instruments and vibrating densitometers are among the new types, but solids can settle on them and alter their calibration. Radioactive density measurement is also applied in several plants.

(*c*) The refractive index of some liquids is characteristic of their concentration. Continuous refractometers are applied to the measurement and control of composition in evaporator plants. The fast response of the optical instrument is an advantage, but sampling line dead time may outweigh this.

(*d*) Conductivity measurement. The electrical conductivity of certain solutions varies with concentration and can be used for concentration measurement and control. Conductivity measuring instruments are well developed and can be adapted to this task, as is sometimes found in caustic soda evaporation plants. It should be mentioned that all indirect methods are temperature sensitive and need some type of compensation. Calibration by true analytical methods is always necessary (see Chapter 9.1).

### 5.5.3 SINGLE EFFECT EVAPORATOR CONTROL

The control scheme of a single effect evaporator constructed with the aid of the elementary loops and dynamic considerations mentioned above is shown in Fig. 5.23. The production rate is controlled by the energy input, which is under flow

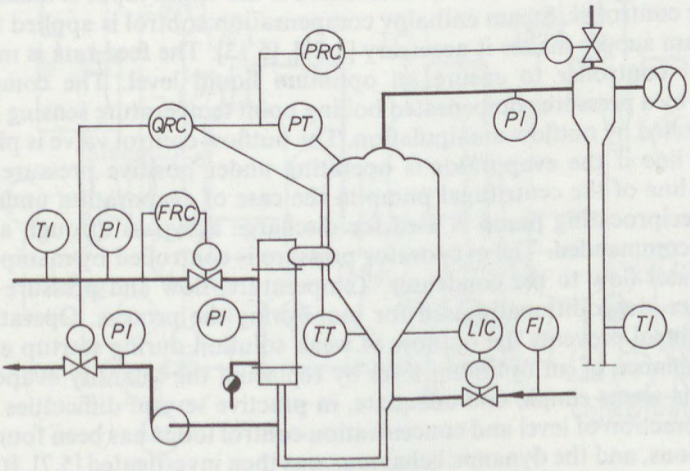


Fig. 5.23 Control of a single effect evaporator

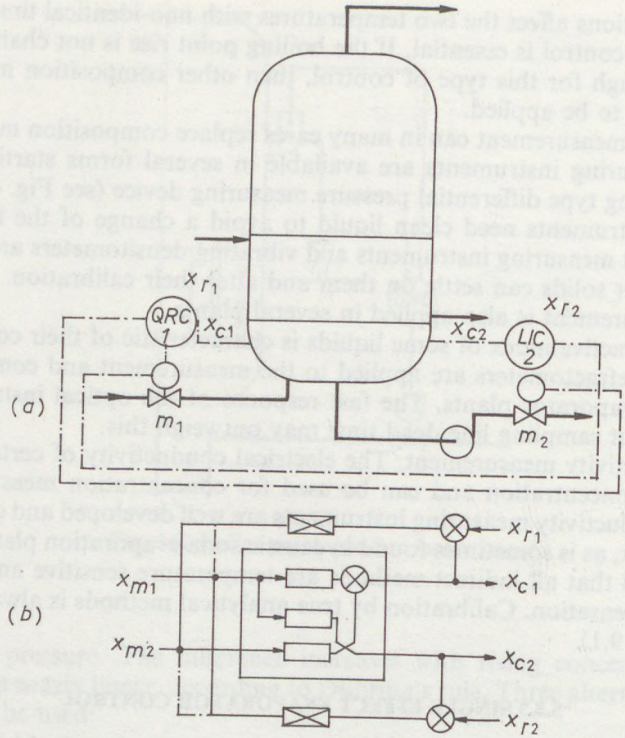


Fig. 5.24 Cross connection control scheme of an evaporator

control in the scheme shown in the Figure. The maximum production rate at a given saturated steam pressure is maintained if the steam input is manipulated by a pressure controller. Steam enthalpy compensation control is applied if variation of the steam supply makes it necessary [2.21], [5.13]. The feed rate is manipulated by a level controller to ensure an optimum liquid level. The composition is measured by a pressure compensated boiling point temperature sensing instrument and controlled by outflow manipulation. The outflow control valve is placed in the discharge line if the evaporator is operating under positive pressure, or in the discharge line of the centrifugal pump in the case of evaporation under vacuum. When a reciprocating pump is used for discharge a bypass through a three-way valve is recommended. The evaporator pressure is controlled by manipulating the cooling water flow to the condenser. Temperature, flow and pressure measuring instruments are additionally used for monitoring the process. Operation of this type of control prevents the outflow of weak solution during startup and ensures the maintenance of an optimum level by replacing the quantity evaporated. Although this seems simple and adequate, in practive several difficulties may arise.

The interaction of level and concentration control loops has been found to result in oscillations, and the dynamic behaviour was then investigated [5.7]. It was found that in certain cases a cross-connection is advantagous. In Fig. 5.24 the control

loops and a block diagram of the scheme are shown. The level controller manipulates the outflow and the concentration controller manipulates inflow.

Other problems have been encountered in a urea plant with a control scheme similar to that shown in Fig. 5.23. After a detailed simulation study it was found that level oscillation was due to pressure changes and because the calculated time constants were considerably smaller than the real ones. Pressure changes in the range of 300 Pa caused level changes of 200 mm. The feed manipulation was altered from level to flow control and tighter pressure control was applied. Investigation of the relative gain array can help to find the best pairing of variables. The deficiencies of the control scheme presented emphasized the investigation of material balance and feed-forward control. From the material and heat balance equations presented previously, it is possible to calculate the heat input required to convert a feed of known concentration to a specified product composition. Thus product quality control may be implemented by manipulating feed rate and/or heat input. If feed is coming from a previous processing unit without intermediate surge capacity it cannot be manipulated.

Some *material balance control systems* operate on this principle [5.15]. Steam availability, heat losses and feed temperature changes may be taken into consideration.

### 5.5.4 CONTROL OF MULTIPLE EFFECT EVAPORATORS

To increase steam utilisation, multiple effect evaporators or evaporator plants are used in the majority of cases. There are two types of multiple effect evaporator plants, the forward feed and the reverse feed types. In a concurrent multiple effect evaporator plant as shown in Fig. 5.25 the liquid and the steam (vapour) streams

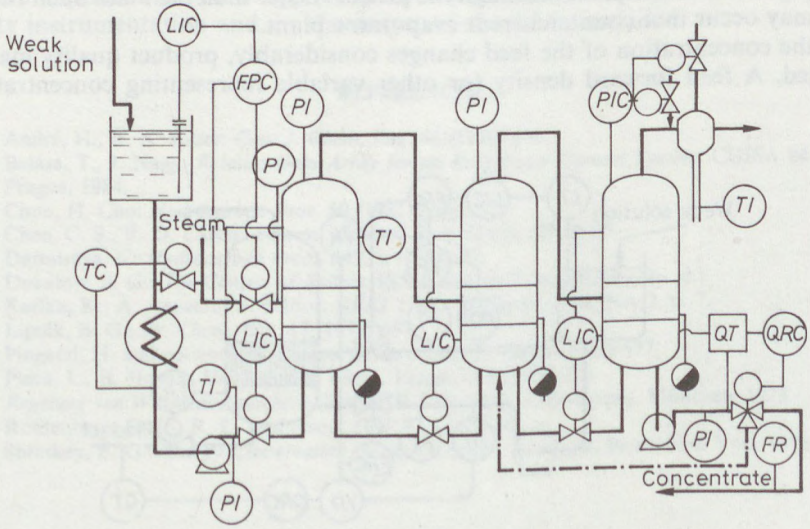


Fig. 5.25 Concurrent evaporator plant control scheme

flow in parallel in the same direction. The concentrate or product is the outflow of the last effect, which operates under the lowest pressure. In a countercurrent plant the liquid flows in the opposite direction. Because the liquid has to flow from lower pressure to higher pressure stages, pumps are required between the effects. This circumstance makes the sizing and operation of the level control valves easier than with concurrent plants. The control system of multiple effect evaporators are built up from a series of those for single effect evaporators, with some modification. A double effect evaporator control system is shown in Fig. 5.20. Pressure control is generally applied only on the last (lowest pressure) effect. In some plants with vapour offtake and a complex steam network, pressure control of all effects may be necessary. The load of the plant is sometimes controlled by pressure control of the first effect. A triple effect evaporator plant scheme with controllers is shown in Fig. 5.25. The weak solution enters a feed tank. The tank has an averaging function, both on concentration and flow rate. An averaging level controller sets the reference value of the plant load to reach equilibrium between the production rate of the preceding process and the evaporation plant section.

The load control is effected by control of heat input. The level controller of the feed tank is cascaded with the steam flow controller. Compensation for steam pressure variation is recommended. With increasing evaporation, the level in the evaporator will decrease and its level controller will increase the feed flow. Increasing vapour rate will increase the throughput in the next effect and so forth, up to the last effect. Evaporation in the last effect is usually small and product concentration is high, and it is therefore recommended to recirculate a part (about 30%) of the product to achieve stable operation and to avoid blockage of the discharge line. A load change may affect the product quality if it propagates through the system faster than the manipulated variable, and will cause a transient change in product composition. An opposite transient is caused by a load change if the effect of the manipulated variable passes through the process faster than the load. Such behaviour may occur in a countercurrent evaporator plant.

If the concentration of the feed changes considerably, product quality may be affected. A feed forward density (or other variable representing concentration)

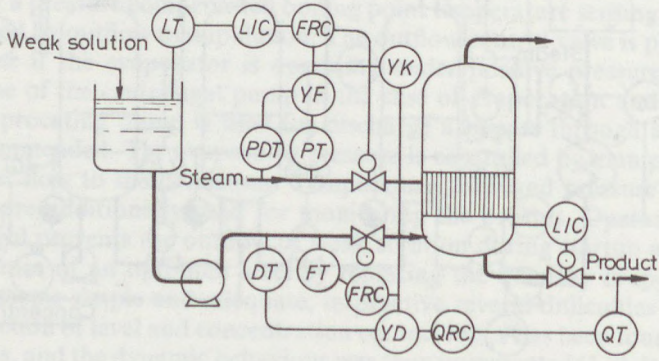


Fig. 5.26 Evaporator feed and load control

compensation may be used. Product density feedback may be connected to the load control system. Feed rate–steam rate ratio control may also be applied for load control. In this scheme, shown in Fig. 5.26, level controllers manipulate the outflow from each effect. An average level controller on the surge tank sets steam flow in cascade. Momentary reduction in steam availability would be accommodated by allowing the tank level to rise until the situation is corrected. Input and output density ratio affects feed rate-steam rate ratio. Heat losses and heat exchanger surface fouling may cause minor load variations. A feed-forward and feedback computer control system with time lag compensation is recommended, too [5.4].

### 5.5.5 CONTROL OF WASTE HEAT BOILERS

Boilers form a special group of single effect evaporators. (Water is evaporated to generate steam.) Boiler control in itself is a well-developed autonomous discipline with a vast literature [5.6], [5.3]. The topic is beyond the scope of this book, except for waste heat boiler control.

Waste heat boilers absorb the surplus heat of reaction or heat used for high temperature chemical treating processes. Waste heat boilers usually form integral parts of the process equipment. The big difference between standard fired boiler and waste heat boiler control lies in the control objective.

A fired boiler has to meet load requirements and the objective of such a boiler control system is to ensure delivery of the required quantity of steam at the specified pressure and with optimal combustion. The control objective of a waste heat boiler is to absorb waste heat and produce steam at the specified pressure under safe operating conditions. The steam flow rate depends on the heat input, which cannot be manipulated.

Boiler water level control, and pressure control are parts of the control system. Three component control is applied in some waste heat boiler types (see Fig. 2.11). Safety instrumentation and an alarm system should be included.

### REFERENCES


[5.1] André, H., R. A. Ritter: *Can. J. Chem. Eng.* 48 (1976) 696.
[5.2] Balázs, T., I. Nagy: *Relative Gain Array for an Evaporator Control System.* CHISA 84 Conf. Prague, 1984.
[5.3] Chun, H. Cho: *Hydrocarbon Proc.* 60 (1981, Aug.) 82.
[5.4] Chen, C. S., R. D. Carter: *Instrum. Control Syst.* 55 (6), (1982) 65.
[5.5] Dattatreya, S.: *Hydrocarbon Proc.*, 64 (1), (1985) 87.
[5.6] Dukalow, S. G.: *The Control of Boilers.* ISA Research Triangle Park. (n. d.)
[5.7] Kaffka, K., A. Ágoston, B. Nádor: *KÉKI Trans.* Budapest 1966, No. 2, p. 7.
[5.8] Lipták, B. G.: *Br. Chem. Eng.* 17 (1972) 637.
[5.9] Pingaud, H. and co-workers: *Comput. Chem. Eng.* 13 (4–5), (1989) 577.
[5.10] Pleva, L., B. Novák: *Hung. J. Ind. Chem. Veszprém* 4 (1976) 61.
[5.11] *Regelung von Wärmeaustauschern.* NAMUR-VDI/VDE, Oldenbourg, München, 1973.
[5.12] Rothenberg, D. H., R. L. Nicholson: *CEP* 77 (1981) 80.
[5.13] Shinskey, F. G.: *Energy Conservation through Control.* Academic Press, New York 1978.

CHAPTER 6

# INSTRUMENTATION OF MASS TRANSFER UNIT OPERATIONS

Many operations in the chemical industry involve the change of concentration of a mixture by mass transfer without chemical reaction. The transport of mass by individual molecular motion is usually referred to as diffusion. The driving force of mass transfer is a concentration difference. Mass transfer can occur in one single phase of miscible materials (eddy diffusion), between two immiscible phases through a boundary layer (e.g. absorption), and through a membrane (e.g. dialysis). The mass transfer through a phase interface can be described by the two film theory (boundary layer), by the penetration theory, or by the surface renewal theory. In most of the unit operations, simultaneous mass and energy (heat) transfers take place and this makes exact modelling difficult and complex. This is the reason for using simplified or reduced models. Experience and experiments are of great importance in diffusion operation control, more so than for the operations previously described.

## 6.1 CONTROL OF CRYSTALLISATION

Crystallisation is a separation method for the recovery of dissolved substances from a solution. The control objectives are the yield of a pure product with specified shape, size and good handling characteristics (free flowing, or pleasant appearance). The product specification may include colour, grain size distribution, density, powder content and suitability for storage. In some crystallisation processes the purity of the mother liquor is specified, as in the oil industry deparaffination processes. In the cooled crystallisers (chillers) the paraffin content is crystallised and separated from lube oil.

Crystallisation depends on the degree of saturation of the solution. A solution is saturated when an equilibrium exists between dissolved and undissolved molecules of a solute in a solvent. The saturation equilibrium is a function of temperature. Crystallisation begins only if supersaturation has been achieved. Three stages of supersaturation can be distinguished; the metastable region, an intermediate region, and the unstable region. There are two steps in crystallisation; the formation of nuclei and crystal growth. The nucleation rate increases exponentially with supersaturation, the growth rate being described by the equation:

$$r_w = k_w(\Delta c)^n \tag{6–1}$$

with $\Delta c$ — concentration difference between actual and saturation concentration,
$k_w$ — constant of rate (temperature dependent).

The exponent $n$ is generally unity, and growth rate is consequently a linear function of supersaturation.

The main problem is to control supersaturation in a way which results in an adequate number of crystals and adequate crystal growth. Manipulation of the concentration or supersaturation can be achieved by evaporation of the solvent or by cooling the solution. Several methods are used, from direct combustion heating to vacuum evaporation cooling. Continuous, batch and semi-batch crystallisers are all applied in the chemical industry, and some reactors, called reaction crystallisers, have the product leaving in crystalline from. The greatest difficulty in crystalliser control is that no direct measurement method is available for crystal size, number and growth rate [6.1].

### 6.1.1 CONTROL OF EVAPORATING CRYSTALLISERS

Evaporating crystallisers are instrumented in a similar way to evaporators. The heat input control system depends on the heating method (direct combustion or submerged combustion, indirect heating, spray evaporation). To maintain stable operation a constant heat input is provided through a steam flow controller and constant pressure by a pressure controller, as shown in Fig. 6.1 for a continuous type evaporating crystalliser.

The vacuum is controlled by air bleeding. Slurry concentration is supervised by density measurement. It is assumed that the crystals are uniformly dispersed and that the density of the mother liquor is constant. In this case a differential pressure type density meter is applied to measure concentration according to the equation

$$\gamma_a = \frac{\gamma_c \cdot \gamma_l}{x_c \gamma_l - x_l \gamma_c}, \tag{6–2}$$

where $\gamma_a$ — average density (measured);
$\gamma_c$ — crystal density;
$\gamma_l$ — mother liquor density;
$x_c$ — weight % of crystals;
$x_l$ — weight % of liquid.

Liquor feed is manipulated by the level controller LICA-3, which is a differential pressure type instrument with water purged impulse lines to avoid blockage by crystals in order to maintain the liquid level in the crystallisers. Slurry is recirculated to keep the crystals in motion, and partially fed to a separating centrifuge. The feed tank (*4*) is under level control and serves for mixing mother liquor with fresh feed. The boiling point is recorded and the cooling water temperature after the condenser is measured or controlled for energy conservation. A safety interlock system (*S*) is required to prevent malfunction. In case the circulating pump fails, the heating steam valve is shut. The centrifuge, with its own safety devices, should be incorporated into the interlocking system. If on-line concentration measurement methods are available, such as electrical conductivity measurement for sugar solution concentration, it is advisable to apply this for control. Crystal washing and drying may complement the crystallising process.

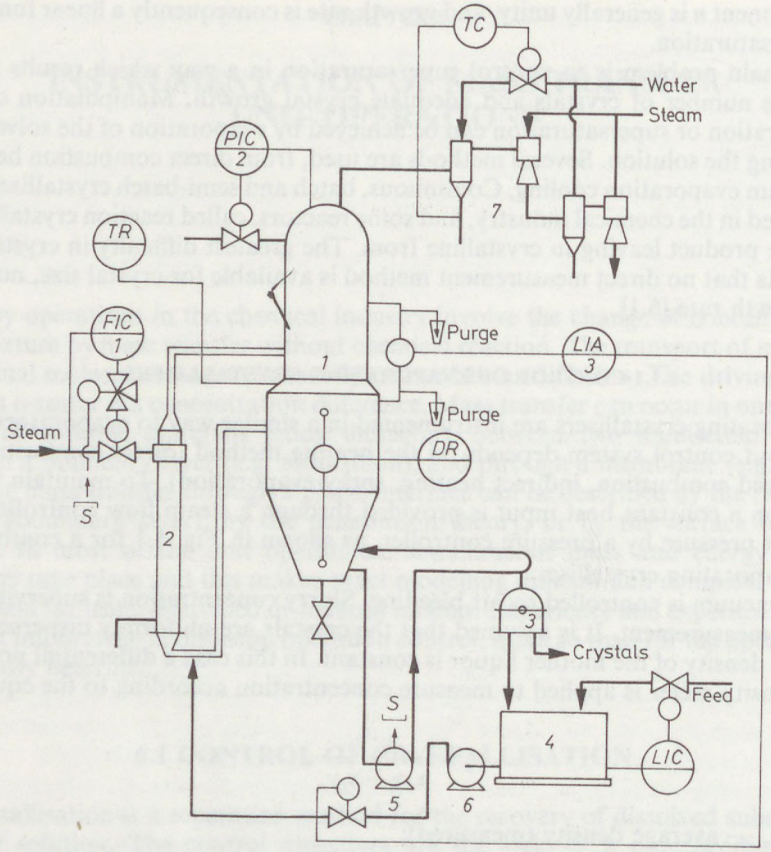


Fig. 6.1 Instrumentation of a continuous evaporator crystalliser. *1* chest; *2* heater; *3* separator; *4* tank; *5* recirculating pump; *6* feed pump; *7* condenser and vacuum pump; *S* safety system

The operation of batch and semi-continuous evaporating crystallisers can be fully automated with the aid of programmable sequence controllers. The scheme and the operating cycle of a semi-continuous evaporating crystalliser is shown in Fig. 6.2. The liquid level begins to rise from the starting time $t_0$, which is the feed valve opening point. Liquid feed fills the heating system and reaches the top level at time $t_1$, when the whole heating surface is covered and the steam supply valve can be opened. As a result of heating the temperature of the solution will rise to boiling then evaporation begins. With evaporation, the concentration rises and reaches the preset supersaturation value at time $t_2$, when inoculation with a small crystal seed takes place. Nucleus formation and crystal growth begin. The feed is manipulated for level and concentration control. A programmable controller (PLC) serves for preset concentration and level rise. Too slow a rate of evaporation results in poor mixing, and thus the danger of crystals agglomeration increases. When the level rise is too rapid the PLC switches from solution feed to pure water.

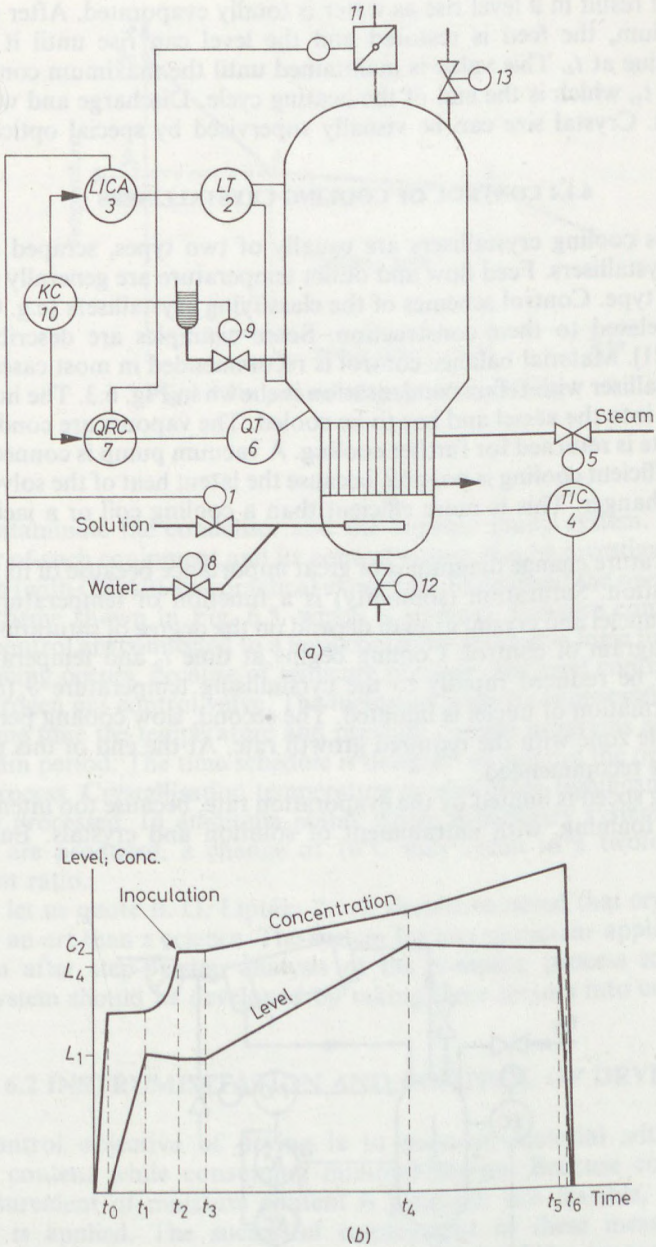


Fig. 6.2 Semi-batch evaporator-crystalliser. (*a*) scheme; (*b*) time cycle diagram. *1* solution feed valve; *2* level transmitter; *3* level controller; *4* temperature controller; *5* heating steam control valve; *6* conductivity transmitter; *7* saturation controller; *8* pure water feed valve; *9* inoculating system; *10* Programmable Logic Controller (PLC); *11* pressure manipulating control damper; *12* let down valve; *13* venting valve

This does not result in a level rise as water is totally evaporated. After reaching a new equilibrium, the feed is restored and the level can rise until it reaches a maximum value at $t_4$. This value is maintained until the maximum concentration is reached at $t_5$, which is the end of the heating cycle. Discharge and washing are the last steps. Crystal size can be visually supervised by special optical devices.

### 6.1.2 CONTROL OF COOLING CRYSTALLISERS

Continuous cooling crystallisers are usually of two types, scraped surface or classifying crystallisers. Feed flow and outlet temperature are generally controlled with the first type. Control schemes of the classifying crystallisers (e.g. Oslo type) are closely related to their construction. Some examples are described in the literature [2.21]. Material balance control is recommended in most cases. A batch vacuum crystalliser with reflux condensation is shown in Fig. 6.3. The hot solution is introduced into the vessel and has to be cooled. The vapours are condensed and the condensate is returned for further cooling. A vacuum pump is connected to the condenser. Efficient cooling is possible because the latent heat of the solvent is used in a heat exchanger. This is more efficient than a cooling coil or a jacket on the crystalliser.

The temperature change diagram is of great importance because of its impact on crystal formation. Saturation (solubility) is a function of temperature and the formation of nuclei and crystal growth depend on the degree of saturation. Fig. 6.4 shows the diagram of control. Cooling begins at time $t_0$ and temperature $\vartheta_0(a)$ which has to be reduced rapidly to the cyrstallising temperature $\vartheta_c(b)$. In this period the formation of nuclei is initiated. The second, slow cooling period maintains the stable zone with the required growth rate. At the end of this period ($c$), fast cooling is recommended.

The cooling speed is limited by the evaporation rate, because too intense boiling would cause foaming, with entrainment of solution and crystals. Entrainment

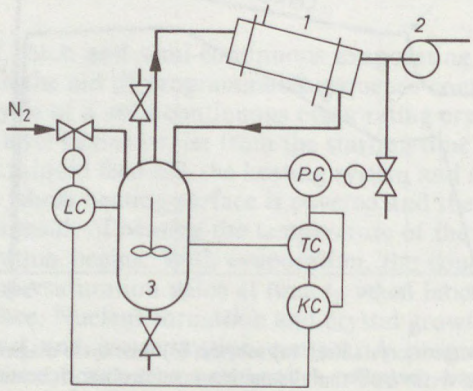


Fig. 6.3 Cooling crystalliser control scheme. *1* condenser; *2* vacuum pump; *3* evaporator vessel

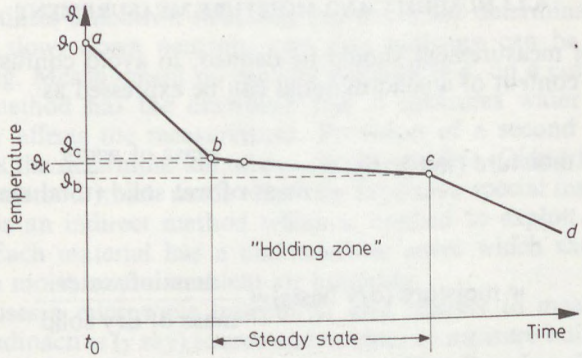

Fig. 6.4 Temperature diagram of crystallising

would contaminate the condenser and the vacuum pump system. The dynamic behaviour of such equipment and its control system can be investigated by digital simulation (with CSMP) and practical experience has proved the operability of the control scheme shown in Fig. 6.3, which is optimal. Pressure control and temperature control are connected to a level controller through a logic function. When rapid foaming occurs, because of reducing pressure, the level controller manipulates a nitrogen gas control valve. The increased pressure suppresses the foaming. At the same time the temperature and pressure control programs are interrupted for a certain period. The time schedule is designed to achieve the optimal crystallisation process. Crystallisation temperature is even more significant if a mixture has to be processed. In ammonia plants where quaternary systems of nitrogen fertilisers are produced, a change of 10°C may result in a twofold change of component ratio.

Finally let us quote B. G. Lipták: "...it should be noted that crystallisation is still more an art than a science. The system for any particular application should be chosen after step-by-step analysis of the complete process scheme... The control system should be developed by taking these factors into consideration." [1.9]

## 6.2 INSTRUMENTATION AND CONTROL OF DRYERS

The control objective of drying is to produce material with a specified moisture content while consuming minimal energy. Because continuous on-line measurement of moisture content is generally not feasible, indirect measurement is applied. The successful employment of these measurements depends on how well they represent the actual state of the process. This is the reason why many individual methods are used in dryer control. Because moisture and humidity determination are essential in drying control, the measurement methods should be considered first.

### 6.2.1 HUMIDITY AND MOISTURE MEASUREMENT

The units of measurement should be defined, to avoid confusion. The liquid, mostly water, content of a solid material can be expressed as

$$x \text{ moisture (wet basis)} = \frac{\text{mass of water}}{\text{mass of wet solid (total mass)}}$$

$$w \text{ moisture (dry basis)} = \frac{\text{mass of water}}{\text{mass of dry solid}}$$

*Measurement of moisture in solids*

The principal methods for moisture measurement are:
(*a*) mass difference measurement with drying (weight loss),
(*b*) electrical conductivity measurement,
(*c*) dielectric constant determination,
(*d*) infrared radiation reflection measurement,
(*e*) radioactive radiation measurement (neutron dispersion),
(*f*) nuclear magnetic resonance (NMR) measurement;
(*g*) equilibrium vapour pressure measurement (gas humidity),
(*h*) microwave radiation absorption measurement.

Method (*a*) is a batch laboratory procedure in which material is completely dried by a thermal, physicochemical or chemical method. Both wet and dry mass are measured.

Method (*b*) utilises the fact that a material has a lower electrical resistance when wet than when dry. Instruments for continuous and discontinuous measurement are available. Special rotating electrodes have been developed for the measurements of moisture in a moving web. Because of the nonlinearity of the resistance vs. moisture relationship, and because resistance depends on the shape, surface, compactness and size of the material and on the salt content of the moisture, the accuracy of this method depends on stable conditions and environment.

Method (*c*) relies on the high dielectric constant of water (81) as opposed to the small dielectric constants of solids, which rarely exceed 6. The greatest difficulty lies in maintaining stable conditions, as already mentioned previously. Compactness and air content have an effect on accuracy.

Method (*d*) uses infrared radiation and, unlike the three methods mentioned previously, it is a non-contacting measurement method. Reflection type instruments are generally used, with two or four infrared light beams. Batch or continuous measurement of the moisture content of powders or granulated solids (e.g. coal, ammonium nitrate, PVC, rubber ingredients) is possible with this method. The moisture of moving webs (paper, cellophane), plastic coverings or films can be controlled continuously.

Method (*e*) utilises a neutron radiating source for the determination of water content. Water slows down neutrons and thus moisture can be measured by neutron counting. Measurement on moving material (e.g. on a conveyor belt) is possible. The method has the drawback that it measures water volume, and material density affects the measurement. Provision of a second sensor and a computer makes the determination of dry weight possible (Ohmart, USA).

Type (*f*) is a method which needs relatively expensive special instruments.

Method (*g*) is an indirect method which is applied to exploit gas humidity measurement. Each material has a characteristic curve which shows the equilibrium between moisture and ambient air humidity.

Method (*h*) uses a microwave transmitter and receiver to measure moisture content and a radioactive ($\gamma$ ray) source and counter to measure bulk density. The moisture content is calculated by the instrument (Kay Ray Inc. Rosemount C. USA).

### *Gas humidity measurement*

One of the most important variables in drying is the vapour content, commonly called the humidity of the gas into which moisture is evaporated from the drying solid material. Units of measurement are defined as

$x$ — absolute humidity (kg vapour/kg dry air),
$\varphi$ — relative humidity (% saturation at prevailing temperature and pressure).

$$\left(\frac{p_0}{p_{as}}100\right).$$

Some other terms such as dew point, partial pressure and mass of water per unit volume are also used, but use of the first two units mentioned is recommended.

The most simple instrument is the *hair hygrometer*. It works on the principle of length change as a function of moisture. Best known is the blonde lady's hair, but a plastic strip is also applied (e.g. Philips–Withof, GFR). *Psychrometers* measure the difference of a dry and a wet-bulb thermometer. The continuously wetted sensor has to be placed in an air stream or equipped with a blower to provide the minimum gas velocity to maintain equilibrium. *Hygroscopic salts* are applied in many humidity measuring instruments. The salt mostly used is lithium chloride (LiC1) which changes its electrical conductivity with moisture content. In one type of instrument, a glass cloth is impregnated with saturated salt solution and wound on an isolator tube. Two wires are coiled to obtain a uniform distance between the conductors. An electric current flows through the salt solution and the heat generated begins to dry the glass cloth. Reaching the transformation point, conductivity and current are suddenly reduced, and the temperature rise comes to a stop. Then the hygroscopic salt picks up water from the surrounding air and its conductivity will be restored. The process is self-regulating, and it is the equilibrium temperature which is measured. A sketch of the instrument is shown in Fig. 6.5. Other types using the same principle measure electrical resistance and are temperature compensated. Semiconductors have been developed which are sensi-

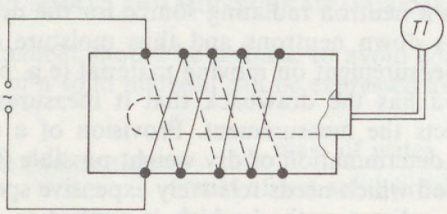


Fig. 6.5 Humidity sensor

tive to humidity and are applied in humidity meters. Solid state sensors have a rapid response and are well suited for control systems.

A wide measuring range hygrometer which is based on alumina can be used under severe conditions. On an aluminium strip an oxide layer is formed and then covered with a gold layer. The capacitance variation of this capacitor is measured and calibrated in terms of humidity. Trace detection is also possible with this instrument (Panametrics, USA). This type was developed for meteorological research and is now adapted for industrial application. Diffusion hygrometers use semipermeable foils, which retain water vapour but let air through. A water adsorbing material is placed in the measuring chamber and absolute humidity is measured by pressure difference.

Direct dew point measurement is possible with mirror type instruments. The gas stream passes a cooled mirror. The mirror reflects a light beam which is sensed by a light cell. At the dew point humidity, condensation occurs on the mirror and changes the reflecting effect. A temperature controller serves for accurate manipulation of mirror cooling and heating. The instrument can also be used under pressure. The method can be used as a calibrating instrument for other hygrometers due to its high accuracy and the principle of its physical operation. Technical details of the instruments and measuring ranges can be found in the handbooks (e.g. [1.5], [1.9]). It has to be mentioned that not all of the methods and instruments are suitable for application as on line sensors in control loops, but the rapid development of microelectronics alters the scene continuously [6.4].

### 6.2.2 PRINCIPLES OF THE DRYING PROCESS

Drying of solids means the simultaneous transfer of mass and heat between two separate phases. In the chemical industry, it is commonly water which is evaporated from a solid into a gas. The mechanism of drying should be studied in order to gain an understanding of dynamic behaviour and control objectives. Moisture may be in the pores, capillaries, crevices or cracks of the solid material, it can be chemically bound and it may be in the cellular structure of the solid.

Equilibrium moisture content is a material property and the sorption isotherm is characteristic for each material. Heat has to be transferred to evaporate the moisture. Drying processes can be grouped in respect of heat transfer as follows:

— convective heat transfer;
— conductive heat transfer;
— radiative heat transfer;
— internal heat generation.

In the following we shall consider only the first and the second groups, which are the most important. Four phases of drying can be distinguished. In the first period material is brought to the drying temperature, and evaporation is slow. In the second period moisture from the wet surface is evaporated into the drying gas. This is the constant rate period. When the free moisture has disappeared from the surface, the evaporation rate begins to fall. In the fourth period the whole surface is dry, and evaporation is reduced even more because moisture has to reach the surface through internal evaporation and diffusion or it has to be released from the crystal or cellular structure. It is apparent from this rough description that analysis of the drying process is not a simple task. With the aid of the mathematical model the final moisture and the drying time can be calculated for batch driers.

### 6.2.3 CONTROL OF CONTACT DRYERS

In contact or directly heated dryers, heat is transferred through the wall of the heater to the drying solid product. To describe contact drying, two types of model can be used:

(*i*) one side heat transfer through the contacted hot surface;
(*ii*) heat transfer through the contacted hot surface and from the other side of the product, too.

The type (*i*) model neglects heat transfer by radiation. Both model types have several subtypes according to whether heat conduction in the wall of the equipment is considered or neglected, and according to the actual drying period, i.e. whether

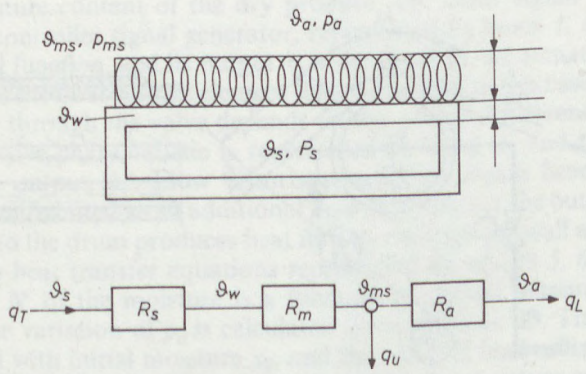


Fig. 6.6 Heat transfer model

moisture evaporates from the surface or the evaporation zone is inside the drying material.

One type ($i$) model can be described with the aid of Fig. 6.6. It is assumed that there is no resistance between the hot surface and the drying material. This means that surface temperature $\vartheta_w$ and material temperature on the hot surface are identical. One part of the total heat $q_T$ transferred serves for evaporation of the moisture, this is the useful heat $q_u$; the other part heats the environment and this is considered as heat loss $q_L$. The heat loss through other parts of the drier is not included in the model.

Heat flow through the unit surface covered by drying material in the steady state is

$$q_u = q_T - q_L = \frac{\vartheta_S - \vartheta_{ms}}{R_s + R_m} - \frac{\vartheta_{ms} - \vartheta_a}{R_a}, \tag{6–3}$$

where the resistances of heat transfer are

$R_s$ — between heating fluid (steam) and wall;
$R_m$ — heat conduction of the drying material;
$R_a$ — heat transfer between material surface and surrounding air.

Heat conduction in the wall is neglected in this model because of the relatively good heat conduction coefficient and the small thickness of the wall. In the transient state the heat capacities of the wall and of the material have to be taken into consideration. Evaporation depends on the vapour pressure difference in or on the solid material and in the surrounding air (gas). The partial vapour pressure ($p_a$) i.e. humidity of the environment, is generally considered constant because of the large volumes, but in the dryer shown in Fig. 6.9, for example, load changes will affect the partial pressure in some cases and this has an effect on the evaporation rate.

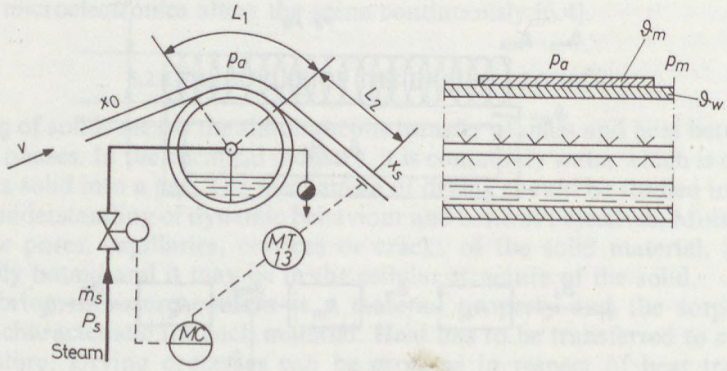


Fig. 6.7 Drum dryer control

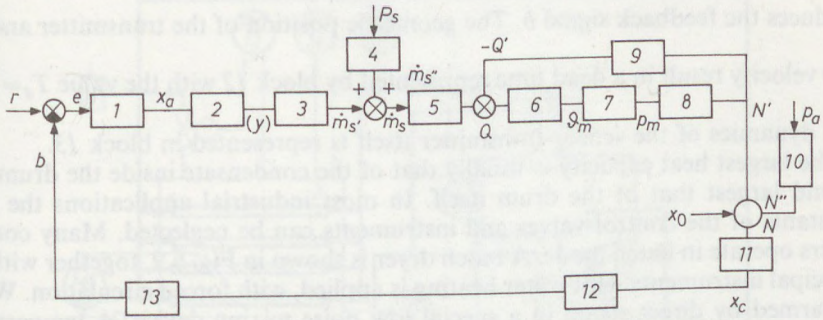


Fig. 6.8 Drum dryer control block diagram. *1* signal forming part of the controller; *2* actuator; *3* final control element (control valve); *4* disturbance caused by steam pressure change; *5* heat flow through the wall; *6* heat flow through the drying material; *7* partial vapour pressure in the drying material; *8* evaporation of the moisture; *9* effect of heat loss on heat demand; *10* disturbance caused by changing humidity of the surrounding air; *11* change of the moisture of the dried material (drying); *12* dead time due to sensor position; *13* dynamic behaviour of the transmitter which produces the feedback signal *b*

Let us analyse the dynamic behaviour of the drum dryer shown in Fig. 6.7. The heating steam is fed through a hollow shaft and condenses on the inner surface of the drum. Condensate collected in the rotating drum is discharged via a pipe led through the rotating shaft. The temperature of the outside, heating surface of the drum is $\vartheta_w$ which transfers heat $q_T$ to the web-like material. Evaporation phenomena can be described by the model presented in Fig. 6.6. Steam flow is manipulated by the control valve of the moisture controller MRC. Steam supply pressure $P_s$ and initial moisture of the web $x_0$ represent the main disturbances. Humidity of the surrounding air (i.e. its partial vapour pressure $p_a$ and temperature $\vartheta_a$) is correlated with the temperature of the web $\vartheta_m$ and evaporation of the moisture. Drum speed is taken to be constant. Moisture is continuously sensed by moisture transmitter MT–13, which is placed at a distance $L_2$ from the rotating drum.

The dynamic behaviour of the control loop of the drum dryer can be analysed with the aid of the block diagram shown in Fig. 6.8. The reference value (set point) $r$ means the moisture content of the dry product. The error signal ($e=r-b$) is generated in the controller signal generator, represented by block *1*, according to the desired control function, and its output $x_a$ is the input to the actuator (block *2*) which manipulates the final control element (block *3*) which in this case is a control valve. Steam flow through the valve depends on the pressure difference and valve position $y$. The valve characteristic is represented in block *3*, and the resulting steam flow is the output $\dot{m}_s'$. Flow disturbances due to steam header pressure variations $P_s$ are represented as an additional flow $\dot{m}_s''$, which is the output of block *4*. Steam flow $\dot{m}_s$ to the drum produces heat flow $q_T$ through the wall and heats the web according to heat transfer equations represented by blocks *5*, *6* and *7*. The evaporation rate $N'$ of the moisture is a function of partial pressure difference $p=p_m-p_a$ and the variation of $p_a$ is calculated through block *10*. The final value of $N$ is calculated with initial moisture $x_0$, and the result is final moisture content $x_c$, the controlled variable. This value is measured by the moisture sensor, which

produces the feedback signal *b*. The geometric position of the transmitter and the web velocity result in a dead time represented by block *12* with the value $T_d = \frac{L_2}{v}$. The dynamics of the sensor-transmitter itself is represented in block *13*.

The largest heat capacity is usually that of the condensate inside the drum and second largest that of the drum itself. In most industrial applications the time constants of the control valves and instruments can be neglected. Many contact dryers operate in batch mode. A batch dryer is shown in Fig. 6.9, together with the principal instruments. Hot water heating is applied, with forced circulation. Water is warmed by direct steam in a special low noise mixing device. A temperature controller manipulates the steam flow. The pressure is measured and usually controlled by hand. Vacuum blender dryers and rotary dryers are instrumented similarly.

A special group is formed by the freeze dryers. The main measured variables in a freeze dryer are:

— drying material temperature,
— heating plate temperature,
— condenser temperature,
— dryer chamber pressure,
— vacuum pump suction side pressure,
— moisture content of the product.

Temperature control depends on the heating system. Electrical heating is manipulated by an on-off switch or continuously, using a thyristor controller. For very low absolute pressures, Pirani or ionisation type instruments are applied. Moisture content may be successfully detected by electrical conductivity measurement or, by measuring the equilibrium vapour pressure. The dryer chamber is isolated periodically from the condenser and in this closed space an equilibrium vapour pressure will develop after 10–20 seconds, corresponding to the ice temperature in the material. The speed of pressure rise can be used as a measure of

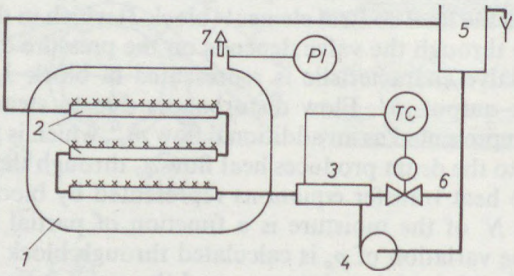


Fig. 6.9 Vacuum tray dryer control. *1* drying chamber; *2* heated trays; *3* direct steam water heater; *4* circulating pump; *5* hot water equalizing tank; *6* steam; *7* to the vacuum pump

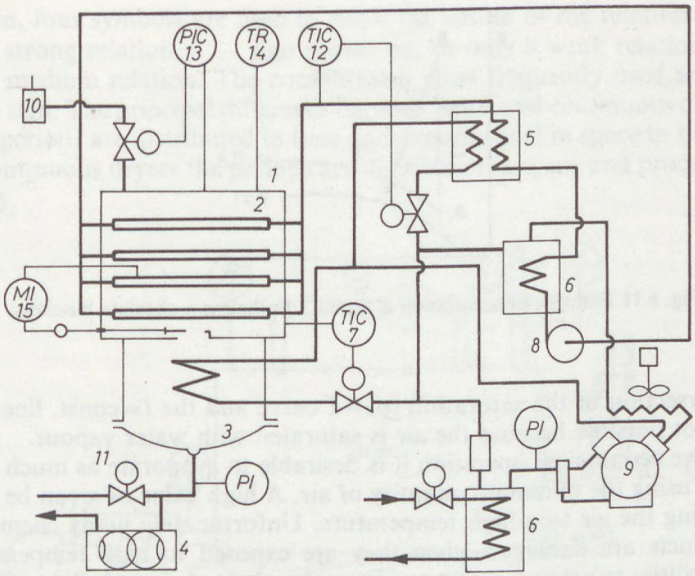


Fig. 6.10 Control of a freeze dryer. *1* drying chamber; *2* tray; *3* condenser; *4* two stage vacuum pump; *5* brine cooler; *6* evaporating brine cooler; *7* temperature controller; *8* circulating pump; *9* two stage compressor; *10* gas filter; *11* safety valve; *12* temperature controller; *13* pressure (vacuum) controller; *14* six point temperature recorder; *15* moisture controller

moisture content. Electrical conductivity measurement can serve for the heating control. When the resistance of the drying material falls below a certain limit, this implies melting of the moisture and means that the heating has to be shut off. In the final period of drying the electrical resistance increases rapidly, which is a signal used for end point determination. A scheme is shown in Fig. 6.10.

### 6.2.4 CONTROL OF CONVECTIVE DRYERS

The best way to understand convective drying phenomena is to analyse the enthalpy–concentration ($i-x$) diagram of the drying gas. The adiabatic drying process can be followed using Fig. 6.11. Ambient air of temperature $\vartheta_1$ and constant humidity is heated in the dryer to temperature $\vartheta_2$. In this drying process it is the hot air which supplies the heat of vaporisation to the wet material and so evaporates the moisture. The temperature of the air thus diminishes; but since the evaporated humidity (with its enthalpy) is removed by the air, the enthalpy of the air remains practically unchanged. In an adiabatic process there is no heat exchange, neither with the wet material (except humidity exchange) nor with the construction material of the dryer, so adiabatic drying may be represented (nearly) by an $i=$const. line in the enthalpy-concentration diagram. The humidity of the gas is raised through evaporation and its temperature is reduced to $\vartheta_3$. The lowest temperature is theoretically the saturation or dew point temperature, which is given

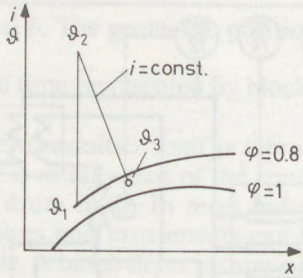


Fig. 6.11 Enthalpy-concentration diagram. $i$ Enthalpy; $x$ absolute humidity

by the intersection of the saturation $(\varphi)=1$ curve and the $i=$const. line. Further drying is not possible because the air is saturated with water vapour.

To achieve economical operation it is desirable to evaporate as much moisture as possible using the minimum quantity of air. A high value of $x$ can be obtained by preheating the air to a high temperature. Unfortunately many chemicals and other products are damaged when they are exposed to high temperature air. Heating facilities to achieve high temperatures are not always available. These and other constraints have forced designers to apply multistep drying with air reheating. For energy conservation, gas is recycled and only the amount necessary for moisture removal is blown out. The fundamental equation describing the evaporation rate from a thin wet layer into a gas stream is [2.18]:

$$\frac{dm}{dt}=A\beta(p_m-p_a), \tag{6–4}$$

where $\beta$ — the component transfer coefficient;
$p_m$ — partial pressure of vapour on the surface;
$p_a$ — partial pressure of vapour in the bulk air, and
$A$ — surface of the wet material.

Analysing the material balance equation and the dynamic behaviour of drying, it can be shown that this is a proportional, first order lag process [6.10].

Many types of dryer and control schemes are used in industry and it is therefore useful to introduce control strategies with the aid of a generalised convective dryer model in which the measured and manipulated variables are presented. In a generalised model no exact values are presented; only qualitative behaviour and interactions can be discussed. Fig. 6.12 shows schematically a generalised convective dryer. On this scheme nearly all possible measured and manipulated variables are indicated. In real industrial dryers not all possibilities are usually used simultaneously, but all can play a role in one or another type of dryer. The names and functions of each variable are indicated with the corresponding tag numbers in Table 6.1. In this Table the relationship (or interaction) between each measured and manipulated variable is specified. Because in a general case no exact figures can

be written, four symbols are used to show the nature of the relations. A + sign means a strong relation, a − sign means no, or only a weak relation, a ~ sign means a medium relation. The combination most frequently used are indicated with a ⊕ sign. The principal difference between batch and continuous dryers is that the four periods are distributed in time and concentrated in space in batch dryers, but in continuous dryers the periods are distributed in space and processed simultaneously.

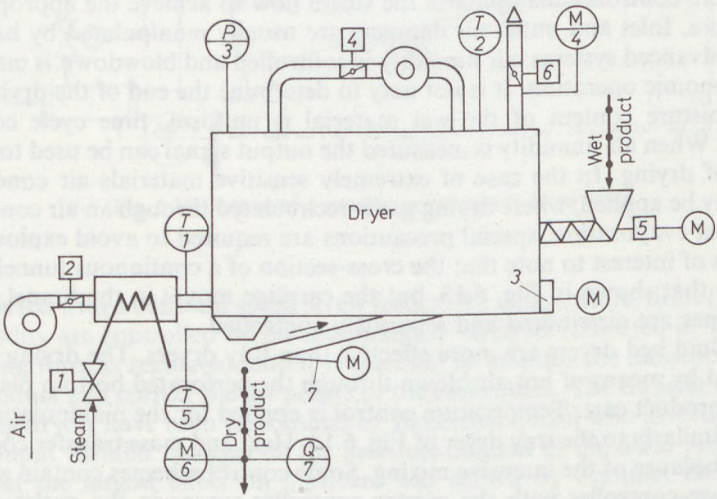


Fig. 6.12 Measurement and control points on a convective dryer (see Table 6.1)

Table 6.1. Interactions of a convective dryer

| No. of PV | Interaction | Heat input | Air input | Material speed | Gas recirculation | Material input | Venting | Material recirculation |
|---|---|---|---|---|---|---|---|---|
| | No. of MV | 1 | 2 | 3 | 4 | 5 | 6 | 7 |
| 1 | Inlet air temperature | ⊕ | + | − | − | − | + | − |
| 2 | Outlet air temperature | + | + | − | ~ | + | + | ~ |
| 3 | Air pressure | − | + | − | − | − | ⊕ | − |
| 4 | Outlet air humidity | + | + | − | ⊕ | + | + | ~ |
| 5 | Dried material temperature | + | + | + | + | ~ | − | ~ |
| 6 | Moisture of the dried material | + | + | + | + | ~ | − | ~ |
| 7 | Quality of the dried material | + | + | + | + | ~ | − | ~ |

*Key:* + strong interaction
~ weak interaction
− no influence
⊕ used in most dryers

### 6.2.5 CONTROL OF BATCH CONVECTIVE DRYERS

In small capacity plants, especially where batch identity might be of value, batch dryers are widely used. A typical convective batch dryer is shown in Fig. 6.13. The wet material is placed on trays in the drying chamber. To facilitate material handling, the trays are usually moved by a carriage with a rack. Small tray dryers like that shown have an air fan and a heat exchanger incorporated. Larger units have a separate ventilator and heat exchanger, but the control system is similar. A temperature controller manipulates the steam flow to achieve the appropriate air temperature. Inlet and outlet air dampers are usually manipulated by hand controls. In advanced systems, air humidity is controlled and blowdown is manipulated for economic operation. It is not easy to determine the end of the drying cycle. If the moisture content of the wet material is uniform, time cycle control is adequate. When air humidity is measured the output signal can be used to indicate the end of drying. In the case of extremely sensitive materials air conditioning dryers may be applied, where drying gas is recirculated through an air conditioner. For solvent evaporation, special precautions are required to avoid explosive mixtures. It is of interest to note that the cross-section of a continuous tunnel dryer is similar to that shown in Fig. 6.13, but the carriage moves in the tunnel, and the drying zones are distributed and separately controlled.

Batch fluid bed dryers are more effective than tray dryers. The drying material is fluidised by means of hot air blown through the perforated bottom plate of the portable product cart. Temperature control is applied for the manipulation of air heating, similarly to the tray dryer of Fig. 6.13. Heat and mass transfer coefficients are high, because of the intensive mixing. Some control schemes contain a cascade temperature controller with the master controller sensor in the outlet air. This controller is coupled to the heating controller, and adjusts its reference value. Air flow is usually controlled manually to obtain a properly fluidised bed [6.12].

### 6.2.6 CONTROL OF ROTARY DRYERS

Rotary dryers are widely used for drying large amounts of free flowing bulk solids. Two types are manufactured, the concurrent and the countercurrent types. Fig. 6.14 shows a countercurrent rotary dryer with the main control loops. Wet

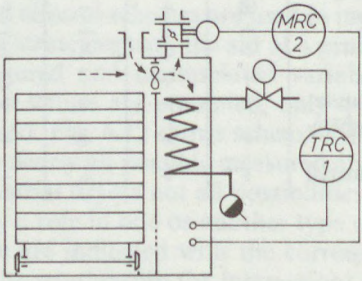


Fig. 6.13 Tray dryer control system

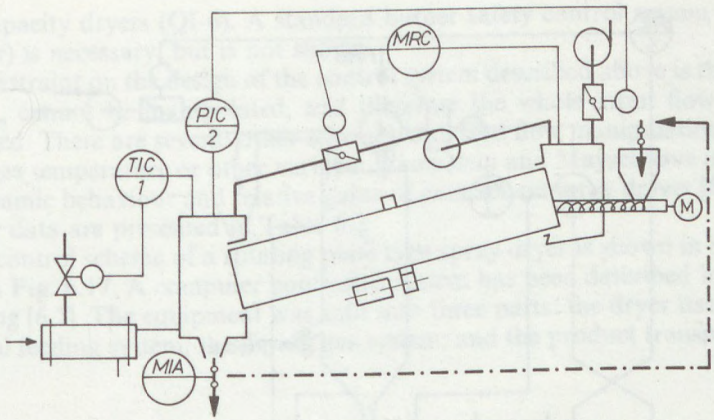


Fig. 6.14 Control of a countercurrent rotary drum dryer

material is fed with a constant speed screw feeder. Air temperature, draft (pressure) and humidity are controlled by the manipulated variables indicated in Table 6.1. The driving force is regulated, and it is essential to monitor the moisture content of the product and correct the set points of the controllers. The transfer functions of rotating dryers have been established by Baumstein [6.10] who investigated the effect of input variable changes on the moisture content of the dried product. He found that the largest effect on moisture was shown by the inlet temperature change of the drying gas. A very detailed study of the dynamic behaviour and control of a rotary drum dryer has been published by Mann [6.14]. System identification, parameter estimation and digital control are described. It is of interest to note that the time constant of the gas side is of the order of seconds and that of the solid side may be hours.

### 6.2.7 CONTROL OF FLUIDISED BED DRYERS

Continuous fluidised bed dryers work on the same principle as batch fluidised bed dryers, but the material is fed and withdrawn continuously. Simple control systems contain only a temperature controller for air heating. In Fig. 6.15 the control scheme of a continuous fluidised bed dryer is shown. When the product moisture specification has narrow limits, an advanced control system is required. Inlet air humidity changes have to be compensated for, if adverse effects are to be avoided. A cascade temperature controller is recommended. The feed may be controlled by a constant feeder or by level control with pressure difference measurement. In the latter case, product outflow governs the operation. Air flow can be manipulated by a flow controller or by a pressure difference controller. Feed control is corrected by the outlet air temperature.

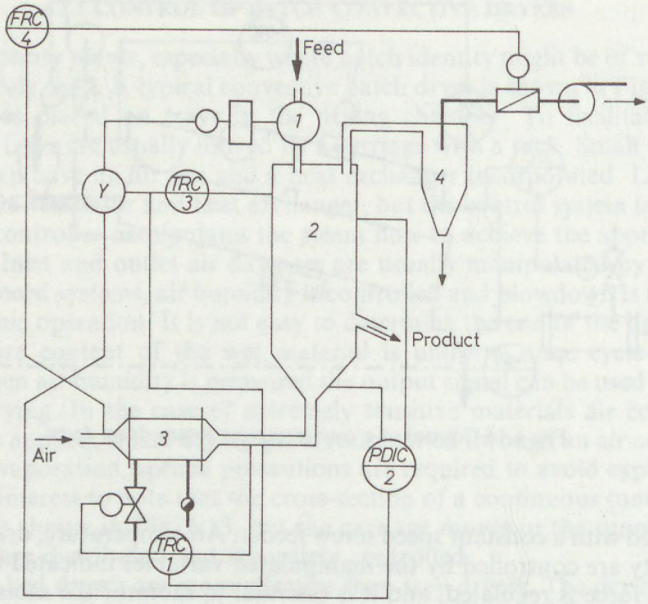


Fig. 6.15 Fluid bed dryer control scheme. *1* rotary feeder; *2* drying chamber; *3* air heater; *4* dust separator

### 6.2.8 CONTROL OF SPRAY DRYERS

Spray dryers are used for the drying of solids suspended in water such as slurries or other suspensions. Spray dryers are grouped according to the spraying method they employ. In the nozzle type dryer, material is sprayed under pressure, while in the rotating plate type dryers, material is sprayed onto a plate which is rotating at high speed. The flow of the drying air can be concurrent or countercurrent. The main control objective is to maintain uniformly sized droplets, uniformly distributed. Direct measurement of droplet size and distribution is practically impossible, and therefore indirect control methods are applied to maintain stable operation.

Fig. 6.16 shows a nozzle type spray dryer with direct firing. The first control loop (TRC-1) measures outlet gas temperature and manipulates the heat input by the fuel control valve. To achieve uniform spraying conditions, the material temperature is held constant by a temperature controller (TIC-2). The fuel–air ratio is maintained by a primary air flow ratio controller (FFRC–3). To increase combustion efficiency, secondary air fed to the combustion chamber is controlled by the flow controller (FRC–4) with its reference value modified by the material feed flow. The control signal is the total air flow ($Q_{ap} + Q_{as}$). The control scheme thus achieves ratio control between the feed flow and gas flow. Because fuel flow is manipulated by the product temperature controller, a temperature alarm is installed in the flue gas outlet pipe to avoid overheating (TIA-5). Flue gas analysis is recommended for

large capacity dryers (QI-6). A standard burner safety control system (e.g. flame detector) is necessary, but is not shown.

A constraint on the design of the control system described above is that the feed flow $Q_m$ cannot be manipulated, and therefore the whole input flow has to be processed. There are several other schemes with feed flow manipulation related to outlet gas temperature or other variable. Baumstein and Maysel have investigated the dynamic behaviour and relative gains of nozzle type spray dryers [6.10]. Some of their data are presented in Table 6.2.

The control scheme of a rotating plate type spray dryer is shown in a simplified form in Fig. 6.17. A computer controlled system has been described by Fink and Schelling [6.7]. The equipment was split into three parts: the dryer itself, with the material feeding system; the drying gas system; and the product transport system.

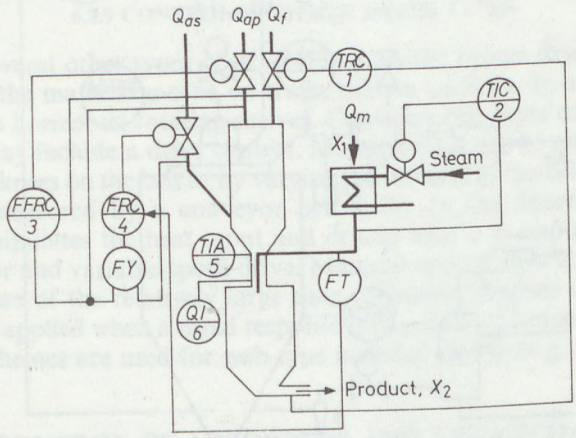


Fig. 6.16 Control of a nozzle type spray dryer

Table 6.2. Relative gains of a nozzle type spray dryer [6.10]

| Controlled variables | | Input variables | | | | | |
|---|---|---|---|---|---|---|---|
| Name | Symbol | $Q_f$ | $Q_{ap}$ | $Q_{as}$ | $Q_m$ | $X_1$ | $\vartheta_1$ |
| Spraying fluid flow vs. material flow | $\frac{G_{pl}}{Q_m}$ | 0.015 | 0.190 | 0.795 | −1.0 | −0.30 | — |
| Primary air flow vs. fuel flow | $\frac{Q_{ap}}{Q_f}$ | −1.0 | 1.0 | — | — | — | — |
| Air outlet temperature | $\vartheta_{a2}$ | −0.529 | −0.021 | −0.089 | −0.309 | −0.06 | −0.451 |
| Moisture of dried material | $X_2$ | −3.208 | −0.44 | −1.841 | −1.882 | −3.11 | −0.376 |

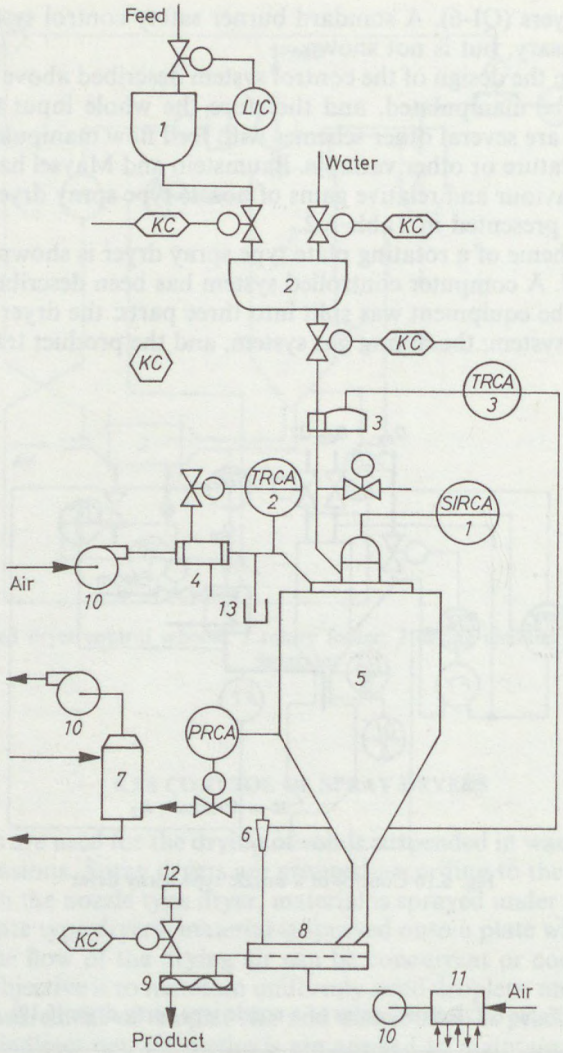


Fig. 6.17 Rotating disc spray dryer control system. *1* feed tank; *2* mixing vessel; *3* metering (proportioning) pump; *4* air heater; *5* dryer body with rotating disc; *6* cyclone; *7* washer; *8* product cooler; *9* mixer; *10* blower; *11* air conditioner; *12* additive tank; *13* safety airlock

Stable operation is achieved by using 14 continuous controllers, which are not all indicated on the diagram. One group of the controllers is autonomous, the others being connected to a computer. Automatic starting and stopping are programmed. If alarm conditions arise, special switching programs are executed to avoid total shut down and allow operation in a safe mode (e.g. to switch material feed to pure water feed).

Prilling towers, used in nitrogen fertiliser plants, have similar control systems to those applied for controlling spray dryers. Air is usually not heated, but is instead cooled to solidify the droplets streaming down from the spraying device. The most important alarms and interlocks are as follows:

— air flow alarm. If there is no air flow, the feed has to be shut off, to avoid accumulation of molten material at the bottom of the tower;
— high outlet temperature alarm. If cooling is not sufficient the molten material can reach the bottom of the tower and causes flooding;
— product transport alarm. If there is trouble with the product outflow, the feed has to be shut off;
— explosion limit alarm. Special care has to be taken to avoid a dust explosion.

### 6.2.9 CONTROL OF OTHER DRYER TYPES

There are several other types of dryers, such as the tunnel dryer already mentioned, where the material moves on trays, shelves or belts. In a turbodryer the material lies on horizontal rotating shelves. Conveyor belt dryer control, as shown in Fig. 6.18, may include a drive control. Material flow can be changed either by varying its thickness on the belt or by varying the velocity of the belt. Feed or outlet flow can be measured by a conveyor belt scale. In the figure a temperature controller manipulates the heat input and drying time is manipulated through a moisture sensor and variable speed drive. Material and air flow are under manual control. Because of the relatively large time constants, cascade control or trend control can be applied when a rapid response is required to compensate disturbances. Similar schemes are used for web-type material drying (e.g. paper).

## 6.3 CONTROL OF ADSORBERS AND ION-EXCHANGE EQUIPMENT

Although adsorbers and ion-exchangers do not operate on the same theoretical principles, their control systems have so many common features that it is practical to treat the two unit operations together. Both operations can be performed

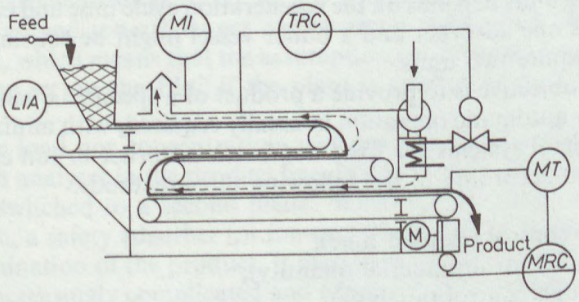


Fig. 6.18 Conveyor belt dryer control system

continuously or in batch mode. Because of the difficulties of solid material transport, most plants are operated in batch mode with fixed bed units. Adsorption takes place on the surface of an active material, the 'adsorbent'. In the chemical industry, adsorption is usually applied to separate vapours from gases (e.g. water from air, benzene from air). The adsorbent used has to be freed from the adsorbed material through the inverse operation, which is called desorption or regeneration. Each adsorbent has its characteristic capacity which shows how much of a given material can be retained at a certain temperature and pressure. Well-known adsorbents are silica gel, activated carbon, activated alumina and the 'molecular sieves'. When a fixed bed adsorber filled with an adsorbent is used to separate one component from a gas mixture, it becomes saturated after it has adsorbed the maximum amount of the component under the given conditions. At this point, breakthrough of the component occurs.

Ion-exchangers are natural or artificial resins which can substitute certain molecules of a solution with their own molecules. The best-known ion-exchange resins are those used for water desalination. Some types are applied for separating valuable components or toxic materials from solutions. Ion-exchangers have to be regenerated to renew their activity. In water purification plants anion exchangers are regenerated with NaCl solution and cation exchangers are regenerated with HCl solution. Dynamic modelling of adsorption and ion exchange is very complex and cannot easily be simplified.

### 6.3.1 CONTROL OF BATCH ADSORBERS AND ION-EXCHANGERS

The operation of a fixed bed batch adsorber has three phases:

— adsorption (or ion-exchange);
— regeneration;
— pretreatment.

Material transfer takes place in the first and second phases. The third phase, which is in some cases very short, comprises cooling, rinsing, washing, bleeding, etc., according to the specific technique used. The feed is generally continuous, therefore a battery of at least two adsorbers or ion exchangers is required. The actual number of the operating units depends on the regeneration cycle time and capacity. In small capacity plants one adsorber and a buffer vessel might be satisfactory, but plant security will require two units.

The control objective is to provide a product of a specified quality in the desired quantity. Fully automatic operation is usually required, with minimal supervision. Automatic control systems for fixed bed batch adsorber or ion exchanger plants can be designed according to the following three methods:

(*i*) time cycle control (elapsed time);
(*ii*) throughput control (material quantity);
(*iii*) breakthrough control (analysis).

Regeneration or desorption control and pretreatment phase control depend on the technology and usually contain some element of time cycle control. Let us consider the abovementioned methods in detail in order to be able to find in each case the most economical control method.

(*i*) In cases of constant demand or feed flow, and if the concentration of the desired component is constant over a long period, the time cycle can be calculated by the equation

$$Bct_c = MW, \tag{6–5}$$

where $B$ — feed flow;
$c$ — feed concentration;
$t_c$ — cycle time;
$M$ — mass of adsorbent in the vessel;
$W$ — adsorbing capacity of unit mass of adsorbent.

If the feed flow is stable $B$=constant and $c$=constant so the time cycle will be

$$t_c = \frac{MW}{Bc}. \tag{6–6}$$

This is the maximum value of the switching time, which has to be reduced for safety reasons.

(*ii*) When the demand or the feed changes with time, calculation of a fixed time cycle is not possible. Saturation of the adsorbent bed can be determined by flow integration if the feed concentration remains constant ($c$=constant). The adsorber capacity is exhausted if

$$MW = \int_{t_1}^{t_2} Bc\,\mathrm{d}t = c\int_{t_1}^{t_2} B\,\mathrm{d}t. \tag{6–7}$$

This means that a flow integrating instrument can be utilized for control. The calculated mass is present, and a limit contact switches to the next cycle. This method is widely used in boiler feedwater purification plants, where the load is variable and the feedwater rate has to follow steam production. A rotating vane or positive displacement water meter with a switch measures the feed flow, and switches to the second ion-exchanger at the preset value. Raw water quality is usually constant, which means that the assumption $c$=constant is valid. Integrated total flow can be set on the PLC if the plant is controlled by a programmable controller.

(*iii*) If neither load nor concentration are constant, quality control should be applied. With an analyser in the product line, breakthrough can be recognised and the equipment switched to a second phase. When the threshold of analysis and signalling is high, a safety adsorber (or ion-exchanger) has to be installed in order to avoid contamination of the product. It may be seen that the methods described above require increasingly complicated and expensive instrumentation. This is the reason why each individual case must be investigated although the most expensive

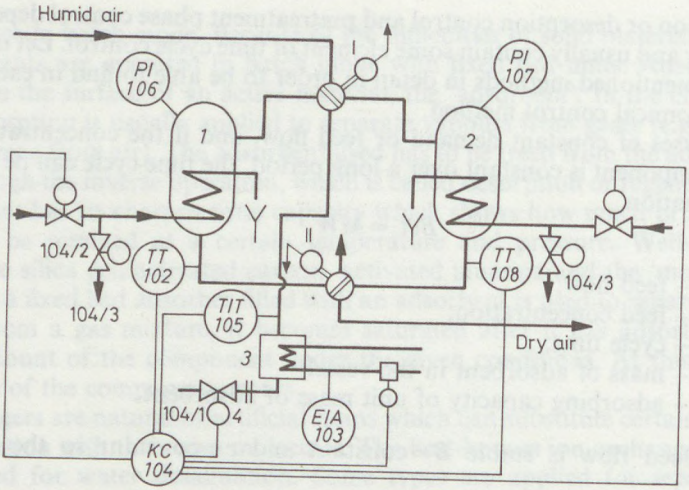


Fig. 6.19 Instrument air dryer control system. *1, 2* adsorbers; *3* heater; *4* restriction

method can be used in all cases. The objective of control system design is to discover the least expensive method. Complementary instruments are useful for adsorption zone temperature measurements. Some types of adsorbers change colour if they become saturated and give a visual signal if the product concentration falls outside preset limits.

An instrument air drying equipment with its control system is shown in Fig. 6.19. Pneumatic instruments require clean, dry air. Depending on the climate, a dew point from −5°C to −40°C might be specified, to avoid condensation and freezing in the piping and in the instruments. Compressed air delivered at 6 to 7 bar ($10^5$ Pa) flows through a cooler, a receiver and a separator. If the compressor is lubricated, an oil separator is required. Instrument air compressors are usually non-lubricated, using graphite or Teflon rings or possibly membrane type compressors. Compressed gas enters through the four-way valve I into the right side adsorber vessel No. 2. The adsorber bed retains humidity. Dry gas leaves through valve II. Adsorbent in vessel No. 1 is under regeneration. Hot air is produced by an electric heater (*3*). Entering through valve 104/1, air is blown into the heater and flows through valve I into one of the adsorbers, leaving through valve II laden with moisture. The regenerating air temperature is controlled by heat input manipulation and monitored at the outlet. The regeneration cycle ends when the outlet air temperature has reached the highest value permitted by the technology. The heater load is checked by an ammeter. After the heating cycle, cooling of the adsorber begins, first with air and then with cooling water through valve 104/2. At the end of the cooling period, water is drained through valve 104/3. The preparation phase is ended, and the adsorber is ready to receive ambient air again. The control system gives a warning signal if the regeneration time is too prolonged. The whole operation is controlled by a sequential controller (KC-104) which is a PLC or a microcomputer in a modern plant. The control system switches adsorber Nos 1 and

2 according to a predetermined time schedule by alternately setting the positions of valves I and II.

Adsorbers exist which are operated with quick pressure changes, the so-called 'heatless dryer' controlled by a sequential controller (see Chapter 11). Ion-exchanger control systems are built similarly. Flow rate constraint is installed to avoid fluidisation of the bed and to ensure the necessary contact time. Uniform and adequate flow should be maintained during the regeneration and washing cycles. Regenerating solution is generally prepared by dilution from a concentrated reagent. Dilution is automatically controlled by a ratio controller, and solution feed control usually forms part of the plant control system. Pressure difference measurement is important to detect ion-exchanger bed irregularities, powder formation or resin clumping.

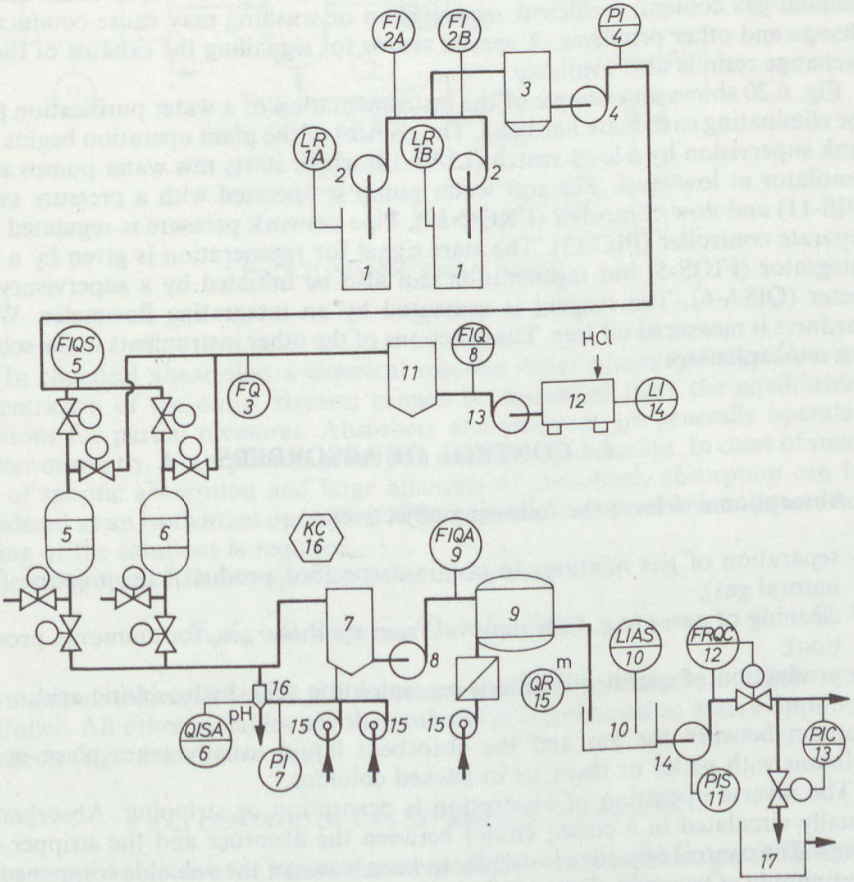


Fig. 6.20 Water softener control. *1* wells; *2* pumps; *3* tank; *4* feed pump; *5* and *6* cation exchangers; *7* decarboniser; *8* pump; *9* post-neutralizer; *10* softwater tank; *11* and *12* HCl solution tanks; *13* acid pump; *14* pumping station; *15* blowers; *16* de-aeration for the pH meter; *17* soft water reservoir

The quality control of deionised water in most cases involves an electrical conductivity measurement. The electrical conductivity of a solution is not specific to any particular component and therefore gives no information on which components are present, but the salt concentration of fully deionised water is usually so low that the exact determination of components is not required. True hardness measurement, silicate or *m*-number determination requires special analysers, which are sophisticated and expensive instruments. In large capacity plants and where severe specifications have to be fulfilled, the application of such instruments is justified. To produce fully deionised water, two types of ion-exchanger resins are required, one anion exchanger and one cation exchanger. Degassing of the water is necessary too, as dissolved carbon dioxide and oxygen content increase the electrical conductivity and may cause corrosion of the equipment. At the end of an operating cycle, when the exchanger bed is exhausted, the conductivity begins to rise. Conductivity measurement alone is not sufficient for supervision because residual gas content, inefficient regeneration or washing may cause conductivity change and other problems. A special sensor for signalling the exhaust of the ion exchange resin is also available.

Fig. 6.20 shows an example of the instrumentation of a water purification plant for eliminating carbonate hardness. The control of the plant operation begins with tank supervision by a level switch (LIAS-10) which starts raw water pumps and a ventilator at low level. The soft water pump is operated with a pressure switch (PIS-11) and flow controller (FRQC-12). Pipe network pressure is regulated by a separate controller (PIC-13). The start signal for regeneration is given by a flow integrator (FIQS-5) but regeneration can also be initiated by a supervisory pH meter (QISA-6). The reagent is measured by an integrating flowmeter. Water hardness is measured off-line. The functions of the other instruments in the scheme are self-explanatory.

## 6.4 CONTROL OF ABSORBERS

Absorption can have the following objectives:

— separation of gas mixtures to obtain a specified product (e.g. propane from natural gas);
— cleaning of gases (e.g. $CO_2$ removal from synthesis gas, for ammonia production);
— production of specified solutions e.g. sulphuric acid, hydrochloric acid.

Contact between the gas and the absorbent liquid usually takes place in tall columns with plates or trays, or in packed columns.

The inverse operation of absorption is desorption or stripping. Absorbent is usually circulated in a closed circuit between the absorber and the stripper columns. The control objective is usually to keep losses of the valuable component to a minimum. One may distinguish between physical and chemical absorption. Physical absorption is governed by the laws of solutions, fundamentally Henry's

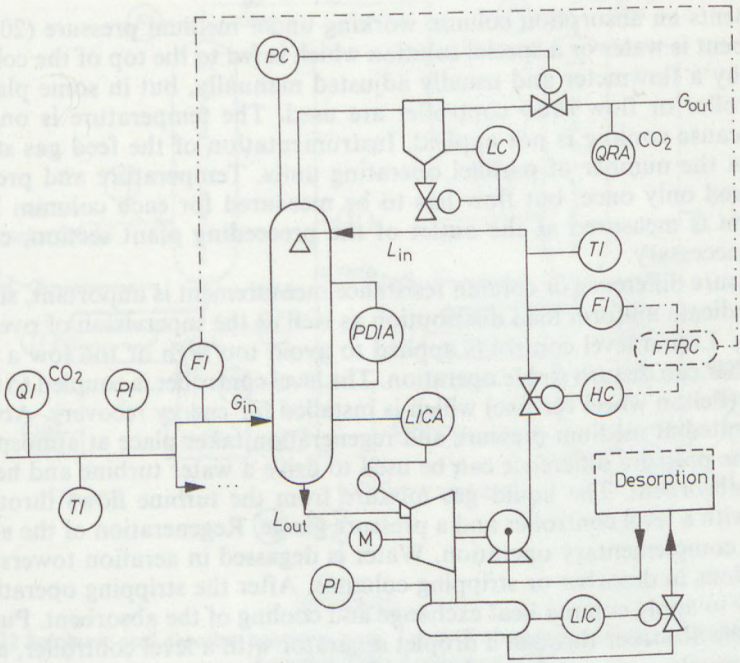


Fig. 6.21 Absorber control scheme

law. In chemical absorption a chemical reaction takes place, and therefore the concentration of the outlet streams cannot be calculated from the equilibrium equations for partial pressures. Absorbers and strippers are generally operated counter-currently. Absorption is usually an exothermic operation. In cases of small heat of specific absorption and large amounts of absorbent, absorption can be considered as an isothermal operation. When there is considerable heat generated, cooling of the solutions is required.

The component balance equation of an absorber is

$$G_{in} Y_{in} + L_{in} X_{in} = G_{out} Y_{out} + L_{out} X_{out} . \tag{6–8}$$

The manipulated variable is $L_{in}$; if necessary this is manipulated via a flow ratio controller. All other variables are then otherwise constrained to assure optimum operation (e.g. to minimize $Y_{out}$).

### 6.4.1 CONTROL OF GAS SEPARATING ABSORBERS

The control objective for a gas separating absorber is to produce gas of specified quality at minimum cost. A typical example of gas purification is the carbon dioxide washing column of a synthetic ammonia plant. The scheme shown in Fig.

6.21 represents an absorption column working under medium pressure (20 bar). The absorbent is water or a special solution which is fed to the top of the column, measured by a flowmeter and usually adjusted manually, but in some plants a flow controller or flow ratio controller are used. The temperature is only indicated because cooling is not applied. Instrumentation of the feed gas stream depends on the number of parallel operating units. Temperature and pressure are measured only once, but flow has to be measured for each column. If the composition is measured at the outlet of the preceeding plant section, checking is not necessary.

The pressure difference or column resistance measurement is important, since it serves to indicate uniform load distribution as well as the supervision of overload or flooding. Liquid level control is applied to avoid too high or too low a level, because either can disturb stable operation. The level controller is coupled to a free jet turbine (Pelton wheel turbine) which is installed for energy recovery. Absorption is operated at medium pressure and regeneration takes place at atmospheric pressure; the pressure difference can be used to drive a water turbine and help to pump the absorbent. The liquid–gas mixture from the turbine flows through a separator with a level controller and a pressure gauge. Regeneration of the absorbent is the complementary operation. Water is degassed in aeration towers, and other solutions in desorber or stripping columns. After the stripping operation it is necessary to apply column heat exchange and cooling of the absorbent. Purified gas leaves the absorber through a droplet separator with a level controller, and if required through a pressure control valve. A gas analyser checks the $CO_2$ content of the outlet gas and gives an alarm at the high limit. In sophisticated control systems, the absorbent flow can be manipulated by a gas analyser controller with a ratio controller in series. Optimum absorbent flow can be calculated from the cooling water temperature, energy costs and purification requirements. Absorbent loss is calculated and the supply regulated.

### 6.4.2 CONTROL OF ABSORBERS WITH LIQUID PRODUCT

The absorbers of a sulphuric acid plant are shown in Fig. 6.22. As has already been mentioned, the control objective is to maintain production of a uniform liquid of a specified quality. In the absorption columns the $SO_3$ content of the gas is absorbed by sulphuric acid in two stages. The absorbent composition is controlled by adding water to the solution in the collecting tank. The product outflow is manipulated by a level controller. The feed stream comes from the accumulator tank of the preceeding oleum absorber column. This absorber is fed with a solution of specified concentration which is controlled by the addition of concentrated sulphuric acid. The heat of absorption is removed by water coolers, which are equipped with conventional heat exchanger instrumentation. In addition an electrical conductivity measuring instrument is used to supervise the effluent water. This is necessary because in the event of heat exchanger leakage, sulphuric acid can contaminate cooling water and cause corrosion in the piping and drainage system. The instrument is fitted with a limit switch and gives an alarm signal.

Product concentration is usually measured by electrical conductivity. Over a small range conductivity and concentration are related in a way which allows

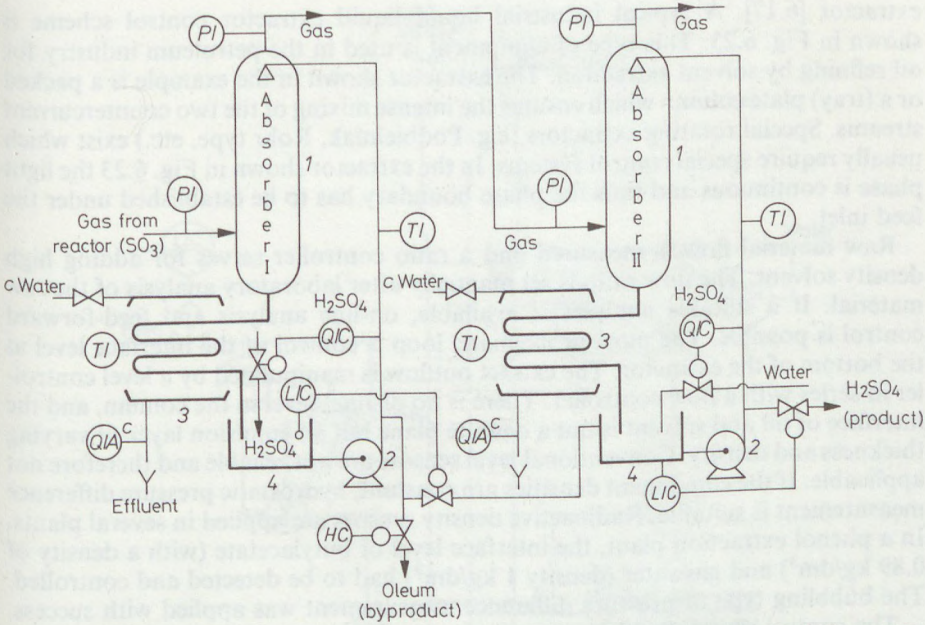


Fig. 6.22 Sulphuric acid absorber control system. *1* packed absorption column; *2* recirculating pump; *3* cooling coils; *4* collecting tank

accurate measurement. Density measurement is also suitable for the determination of the acid concentration, with the restriction that only a small density change occurs in the high concentration range.

## 6.5 CONTROL OF EXTRACTORS

Extraction operations can be divided into two groups, solid–liquid extraction and liquid–liquid extraction. Both groups may comprise both continuous and batch extractors. Batch type extractors usually have very poor instrumentation, whereas continuous units are equipped with advanced control systems. Liquid–liquid extraction dynamics can be described by material balance equations for single stage or multistage, concurrent or countercurrent extraction, as presented e.g. by Mohilla and Ferencz [2.18]. Extraction is a separating procedure using a solvent specific for a given component. The result is the separation of two immiscible phases, one of them containing most of the component required. This phase is called the extract and the other is the raffinate.

An extractor stage has two sections, a contacting or mixing section and a separating section. Mathematical models of extraction equipment can be found in the literature [6.9]. The dynamic behaviour of extractors has been analysed by Jones and Wilkinson [6.11] and Ochiai has described the simulation of an industrial

extractor [6.17]. A typical industrial liquid–liquid extractor control scheme is shown in Fig. 6.23. This type of equipment is used in the petroleum industry for oil refining by solvent extraction. The extractor shown in the example is a packed or a (tray) plate column which ensures the intense mixing of the two countercurrent streams. Special rotating extractors (e.g. Podbielniak, Rohr type, etc.) exist which usually require special control systems. In the extractor shown in Fig. 6.23 the light phase is continuous and thus the phase boundary has to be established under the feed inlet.

Raw material flow is measured and a ratio controller serves for adding high density solvent. The flow ratio is set manually after laboratory analysis of the raw material. If a suitable analyser is available, on-line analysis and feed-forward control is possible. The most problematic loop is control of the interface level at the bottom of the extractor. The extract outflow is manipulated by a level controller in series with a flow controller. There is no distinct level in the column, and the interface of oil and solvent is not a definite plane but an emulsion layer of varying thickness and density. Conventional level sensors are not reliable and therefore not applicable. If the component densities are constant, hydrostatic pressure difference measurement is suitable. Radioactive density sensors are applied in several plants. In a phenol extraction plant, the interface level of butylacetate (with a density of 0.89 kg/dm$^3$) and gaswater (density 1 kg/dm$^3$) had to be detected and controlled. The bubbling type of pressure difference measurement was applied with success.

The control objective of an extraction operation is to produce a raffinate of a specified purity. Quality control of the raffinate is required, and for on-line analysis an optical sensor is used. The instrument gives an alarm signal if the raffinate is off specification. The outflow is manipulated by a pressure controller if the extractor operates under pressure.

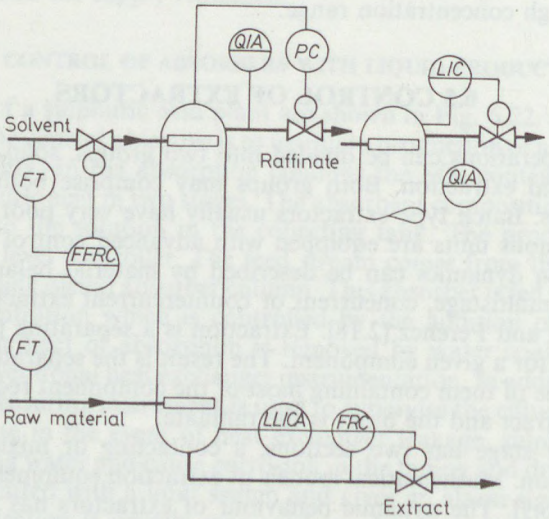


Fig. 6.23 Liquid–liquid extractor control system

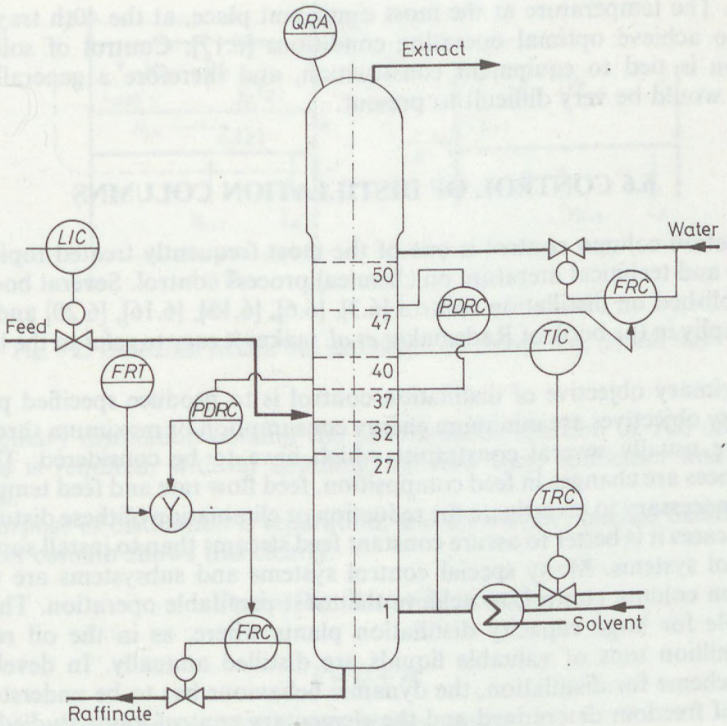


Fig. 6.24 Extractor control scheme

The top level of atmospheric columns is regulated by a level controller as shown in the top right section of the scheme shown in Fig. 6.23. A material balance control scheme has been applied successfully in some plants. Simulation can help in the design or the correction of control schemes, as is shown in Fig. 6.24. The extractor was a 1.5 m diameter, 30 m high column with 50 sieve trays. The average feed flow rate was 3.6 $m^3/h$ to the 32nd tray, it contained organic materials and by-products of a reaction in aqueous solution. The solvent feed to the bottom had an average feed flow rate of 30 $m^3/h$. The solvent extracted organic material containing a very small amount of the reaction by product flows out at the top of the column as extract. In the raffinate, which is the water phase, the by-product and water leave the column at the bottom. The extract is washed with water to eliminate residual by-product contamination. The wash-water is fed to the 50th tray.

The control objective was to produce an extract with less than 0.5 ppm by-product content and a raffinate with less than 0.1% organic material. Operation with a conventional control scheme could not fulfill these requirements. Simulation studies were used to develop the control scheme shown in Fig. 6.24, which has been installed in a plant. The new control system resulted in a throughput increase of 15% and the desired products. Interface levels and holdups are kept at a steady

position. The temperature at the most significant place, at the 40th tray, is controlled to achieve optimal operating conditions [6.17]. Control of solid–liquid extraction is tied to equipment construction, and therefore a generally useful example would be very difficult to present.

## 6.6 CONTROL OF DISTILLATION COLUMNS

Distillation column control is one of the most frequently treated topics in the scientific and technical literature on chemical process control. Several books have been published on distillation control [6.3], [6.6], [6.15], [6.16], [6.20] and the full bibliography in the book of Rademaker *et al.* makes it easy to refer to the literature [6.18].

The primary objective of distillation control is to produce specified products. Secondary objectives are minimum energy consumption or maximum throughput. There are usually several constraints which have to be considered. The main disturbances are changes in feed composition, feed flow rate and feed temperature. It is first necessary to investigate the reduction or elimination of these disturbances. In many cases it is better to assure constant feed streams than to install sophisticated control systems. Many special control systems and subsystems are used for distillation column control, to achieve the most profitable operation. This seems reasonable for large capacity distillation plants where, as in the oil refineries, several million tons of valuable liquids are distilled annually. In developing a control scheme for distillation, the dynamic behaviour has to be understood, the degrees of freedom determined and the elementary control loops studied.

### 6.6.1 DISTILLATION PROCESS DYNAMICS

Distillation column models have been described in several publications, but probably the most detailed description is that given by Holland [6.9]. Simplified models are usually sufficient for control system design purposes. To get a picture of distillation process dynamics, let us write the simplified material balance equation of a generalised tray

$$\frac{\mathrm{d}(H_{vn}+H_{1n})}{\mathrm{d}t}=L_{n+1}-\mathrm{L}_n+V_{n-1}-V_n, \tag{6–9}$$

where the symbols conform with those in Fig. 6.25.

The component balance can be written in a similar way:

$$\frac{\mathrm{d}(H_{1n}x_n)}{\mathrm{d}t}+\frac{\mathrm{d}(H_{gn}y_n)}{\mathrm{d}t}=L_{n+1}x_{i(n+1)}-\mathrm{L}_n x_{in}+$$
$$+V_{n-1}y_{i(n-1)}-V_n y_{in}. \tag{6–10}$$

Perfect mixing is assumed, with no time delay. Heat balances can be similarly developed with the enthalpies of the holdups and streams. This means that for a

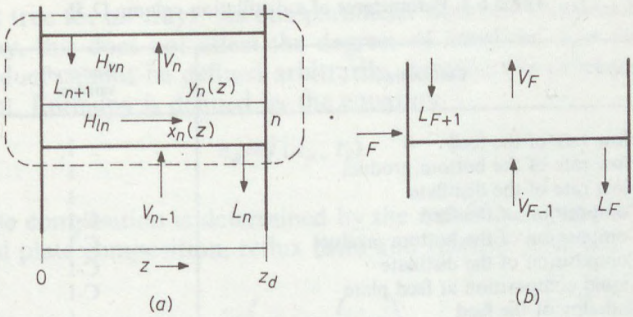


Fig. 6.25 Distillation column tray parameters. (*a*) average tray; (*b*) feed tray

30 tray binary distillation column the simultaneous solution of 100 differential equations is required, without counting the feed tray, condenser and reboiler equations.

The purpose of distillation is separation, and an overall material balance of the distillation column shows this clearly:

$$\text{Feed} = \text{Distillate} + \text{Bottoms}$$

$$F = D + B, \tag{6–11}$$

and the component balance for binary distillation is

$$Fx_F = Dx_D + Bx_B. \tag{6–12}$$

Generally $x_D$ and/or $x_B$ are specified, and the control objective is to maintain product quality. In some cases constant separation is required following the equation:

$$\frac{D}{F} = \frac{x_F - x_B}{x_D - x_B}. \tag{6–13}$$

A disturbance in $x_F$ can be compensated for by changing the $D/F$ ratio, which is known as splitting.

The most important operating variables in distillation column control are the reflux ratio and the boilup ratio. Manipulation of the reflux flow and vapour flow (boilup) are fundamental to distillation column control. The stability of a column depends on material holdup inside the column and its ratio to liquid streams gives a time constant [6.18]:

$$T_n = \frac{H_T}{L}. \tag{6–14}$$

Computer aided design makes it possible to use a rigorous computational procedure to calculate the relative gain matrix for distillation control. Wang has published a method in which a modified computer simulation program (MMSP)

Table 6.3. Parameteres of a distillation column [2.5]

| Characteristic | Number of variables |
|---|---|
| Flow rate of the feed | 1 |
| Flow rate of the bottom product | 1 |
| Flow rate of the distillate | 1 |
| Composition of the feed | C-1 |
| Composition of the bottom product | C-1 |
| Composition of the distillate | C-1 |
| Liquid composition at feed plate | C-1 |
| Enthalpy of the feed | 1 |
| Enthalpy of the bottom product | 1 |
| Enthalpy of the distillate | 1 |
| Heat flow from steam to reboiler | 1 |
| Heat removed through condenser | 1 |
| Column plate number (total) | 1 |
| Plate number in upper column section | 1 |
| (feed plate location) | 0 |
| Phase equilibrium condition* | 1 |
| Pressure at column head | 1 |
| Temperature at column head | 1 |
| | Total 4C* + 9 |

*Note:* * Phase equilibrium conditions can be characterised by several quantities, e.g. by C-1 relative volatility values. From the point of view of the degrees of freedom, the result will be the same.

was applied to control system design [6.21]. Process gain matrices have been generated for several column simulations and relative gain arrays computed. Evaluation of the data has made it possible to design an effective control scheme.

### 6.6.2 DEGREES OF FREEDOM FOR CONTROL OF DISTILLATION

The complexity of a distillation column and its accessories justifies a degree of freedom calculation. The first well-known publication on degrees of freedom, by Gilliland and Reed [6.8], dealt with distillation column calculations. The literature abounds with papers on the calculation of degrees of freedom for distillation control. A systematic investigation was carried out by Földes and Nagy [2.5] which is considered below. The general case of a distillation column for the separation of binary mixtures with one feed and two product streams is characterised by the parameters listed in Table 6.3.

An adiabatic column is assumed, with a liquid product output. The parameters are interrelated by the following relationships. There must be an overall material balance, composition or partial material balance and a heat balance.

The temperature at the top of the column is a function of pressure and composition:

$$t = f(P, x_D). \tag{6–15}$$

The same is true for all trays. As one parameter and one relationship is counted for each tray, this does not affect the degrees of freedom. The enthalpy of the bottom product cannot be defined arbitrarily, because the product is held at its boiling point. Enthalpy is defined by the equation

$$h_B = f(x_B, t_B). \tag{6–16}$$

The distillate composition is determined by the number of trays in the rectifying section, feed plate composition, reflux ratio and relative volatility

$$x_D = f\left(x', m, \frac{L}{V}, \alpha\right). \tag{6–17}$$

A similar relationship exists for the bottom composition

$$x_B = f\left(x', n-m, \frac{L'}{V'}, \alpha\right). \tag{6–18}$$

The number of trays of the stripping section is calculated from the total number of trays, which is a preselected (i.e. fixed) parameter. Finally, $\alpha = f(P)$. Thus in a general case the degrees of freedom can be calculated as

$$F = 17 - 9 = 8. \tag{6–19}$$

Due to the phase boundaries in the reflux accumulator and in the reboiler, two additional degrees can be added and thus the number of degrees of freedom for control is

$$F' = F + 2 = 10. \tag{6–20}$$

In several cases there are constraints which affect the degrees of freedom. Such a constraint is a fixed feed tray. If feed tray location can be changed, the optimal location can be calculated and controlled, too. Another constraint may be that the feed is at its boiling point. For more than two components, the degrees of freedom can be calculated by the equation

$$F = C + 6 \tag{6–21}$$

with $C$ being the number of components.

### 6.6.3 ELEMENTARY CONTROL LOOPS

Because distillation equipment control schemes are fairly complex, comprising several control loops, it is recommended to begin with the analysis of elementary control loops. The whole scheme can be built up from these elementary loops and their combinations.

*Liquid level control*

It has been shown already that control of the phase boundaries and interface levels has to be applied, either to stabilise the geometric position or to maintain the material balance. Level sensors are generally placed in displacement chambers mounted externally. Isolation by valves is required, and if necessary damping devices have to be installed. Heat insulation, heating or cooling may also be required. A level controller on the reflux drum can manipulate either distillate flow or reflux flow. Both systems are used, but distillate outflow manipulation is more frequently applied. Reflux manipulation by means of the level may cause oscillation in the column. When the top product is fed to a following column or another process unit, and uniform flow is required, averaging level control and cascaded flow control should be installed. The reboiler level or column bottom level controller usually manipulates the bottoms flow. The level sensor with displacement chamber is located on the column in the case of a thermosiphon reboiler. In some cases the level controller manipulates the boilup, through reboiler heat input manipulation, and a liquid level change will change the vapour flow. A temperature (or composition) controller manipulates the bottoms outflow. This control scheme, shown in Fig. 6.26, is called cross-coupling control. Its advantages can be estimated by analysis of the block diagrams of the conventional *(b)* and the cross-coupled *(c)* control [6.15].

*Pressure and pressure difference control*

Column pressure control methods can be chosen according to the non-condensable content of vapours in the head of the distillation equipment. Typical pressure control schemes are shown in Fig. 6.27 for liquid product removal (total condensation). The basic scheme is shown in Fig. 6.27*a*. Column pressure is controlled by reflux accumulator blow down pressure control. This method is applied, in addition to other pressure control methods, for safety purposes. The disadvantages of this method are that the pressure drop of the vapour line and the condenser is

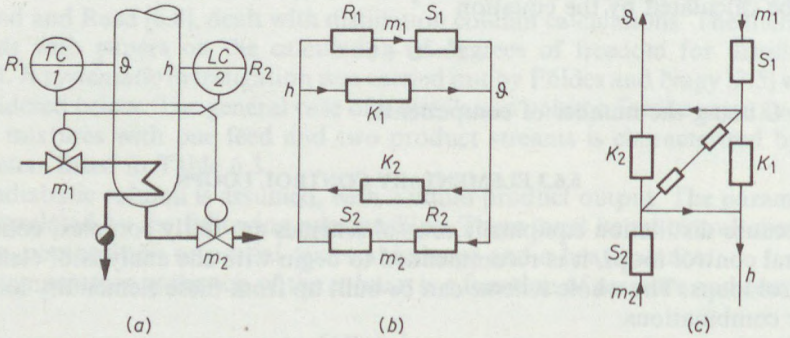


Fig. 6.26 Cross-coupled reboiler control. (*a*) control scheme; (*b*) and (*c*) block diagrams

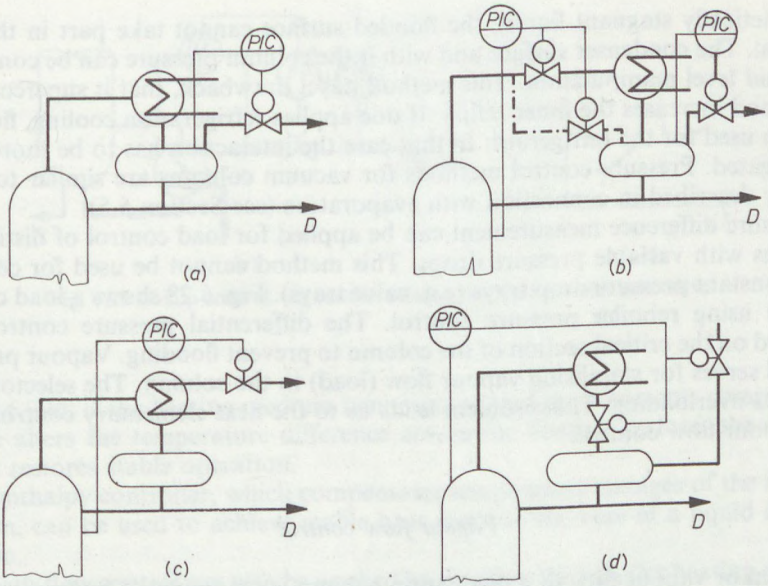


Fig. 6.27 Column pressure control schemes. (*a*) basic scheme; (*b*) throttling and hot vapour bypass control; (*c*) cooling fluid control; (*d*) flooding control

not considered, and a light product loss occurs. This method is applied if the non-condensable content is high or one part of the top product is withdrawn as gas.

A combined pressure control scheme is shown in Fig. 6.27*b*, incorporating direct throttling and a vapour bypass valve. This method is applied with practically no inert gas and a narrow boiling range. Bypassing hot vapours is common practice with air cooled condensers. Pressure may be controlled by a throttling valve only, but this can cause too low accumulator pressure. The bypass is recommended if the column is operated with a large reflux ratio. Bypass alone is used if the condenser is placed below the accumulator, i.e. a submerged condenser is used. Flooding of the condenser can be controlled with the bypass valve. The pressure controller on the accumulator is optional, for safety or for bleeding off inert gas.

Another method which is used for low non-condensable content is shown in Fig. 6.27*c*, where cooling of the condenser is manipulated. The cooling water flow or coolant evaporation pressure can be manipulated in order to increase condensation and reduce pressure, or vice versa. The time lag of the heat exchange is usually larger than that of the other methods mentioned. This has to be calculated and allowed for. This method is applied if the cooling medium is inside the tubes. When the cooling water pressure is not constant, a cascade flow controller can be used. The sensing point of the pressure controller should be installed near to the temperature or quality sensor. Controlled pressure is required to achieve accurate quality measurement.

Condenser flooding is applied in the scheme shown in Fig. 6.27*d*. Because of the great difference in heat transfer coefficients between the condensation process and

the practically stagnant liquid, the flooded surface cannot take part in the heat removal. The condenser surface and with it the column pressure can be controlled by liquid level manipulation. This method has a drawback, that it supercools the reflux and increases the inner reflux. If one applies refrigeration cooling, flooding may be used for the refrigerant. In that case the interaction has to be thoroughly investigated. Pressure control methods for vacuum columns are similar to those already described in connection with evaporators (see Section 5.5).

Pressure difference measurement can be applied for load control of distillation columns with variable pressure drops. This method cannot be used for columns with constant pressure drop trays (e.g. valve trays). Fig. 6.28 shows a load control scheme using reboiler pressure control. The differential pressure controller is installed on the critical section of the column to prevent flooding. Vapour pressure control serves for stabilising vapour flow (load) in the column. The selector relay prevents overloading. This problem leads us to the next elementary control loop, the vapour flow control.

### *Vapour flow control*

Boilup or vapour flow in a distillation column is manipulated by heat input to the reboiler. According to the heating medium, different control methods are used which are similar to those applied to heat exchangers and evaporators. To achieve stable flow a cascade loop is recommended, as shown in Fig. 6.28. When the feed flow is variable, feed-forward control can be useful for vapour flow.

A constraint of heat transfer is the temperature difference at the heating surface. It is known from theory and practice that heat transfer from a hot surface to a boiling liquid does not increase linearly with temperature difference: after a steep rise, an abrupt declining phase starts. This phenomenon is due to the change of boiling mechanism from bubbling to film boiling. Fig. 6.29*b* shows a typical boiling heat transfer curve. Reduced heat flow results in reduced vapour flow, which affects the column operation. To avoid violation of the temperature difference constraint, a selective temperature difference — flow control system can be applied, as shown

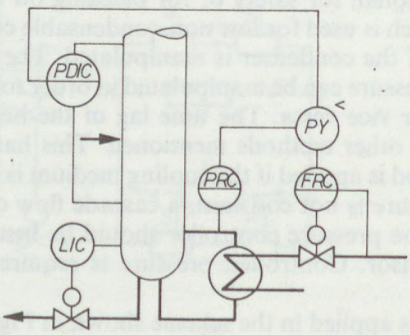


Fig. 6.28 Vapour load control system

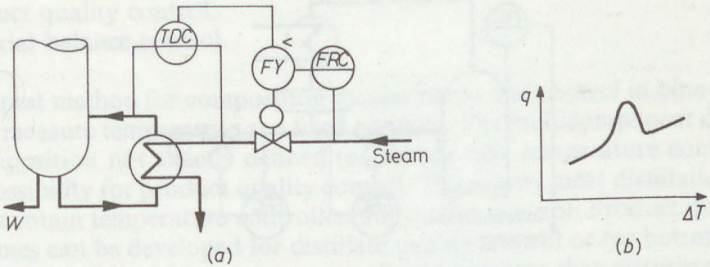


Fig. 6.29 Boilup control. (*a*) control scheme; (*b*) heat transfer rate curve

in Fig. 6.29*a*. If the heating medium temperature change or bottoms composition change alters the temperature difference across the heating surface, the control system restores stable operation.

An enthalpy controller, which compensates temperature changes of the heating medium, can be used to achieve stable heat input in the case of a liquid heating medium.

Vapour flow control can also be applied by flooding the reboiler heating surface. This method is used with steam or refrigerant heating systems. The control valve is in the condensate line for this purpose, which allows a small size valve to be used, but asymmetric operation and an additional time lag are the disadvantages of this method (see Fig. 5.8*b*).

### *Reflux control*

One of the most important variables for the control of a distillation column is the reflux flow. Separation depends on the reflux ratio, which affords the possibility of manipulating the distillate flow and controlling the distillate composition. If feed and boilup are stable and the top pressure is controlled, manipulation of the reflux rate is an effective method for composition control. In the case of liquid product withdrawal the reflux flow can be manipulated in two ways. Distillate flow can be manipulated by a composition (temperature) controller and reflux flow by the accumulator level controller. The reverse method operates with the same controllers connected to the opposite valves. This second method is frequently applied and is illustrated in Fig. 6.32. An advantage of this method is that level changes do not force oscillations on the column (see under *Liquid level control* above). When distillate is withdrawn as gas, or partial condensation is applied instead of total condensation, other reflux manipulation methods have to be used.

The scheme of Fig. 6.30 illustrates the possibility of controlling the reflux ratio directly. This method involves condenser flooding and a special pressure control loop for boilup. A fixed reflux ratio can be maintained with a mechanical flow divider in small scale or laboratory columns. In advanced control systems, ratio and flow controllers are connected to a hierarchical controller which adjusts reference values according to composition and feed measurements. Reflux flow was hitherto considered as being at boiling temperature, and no distinction was made

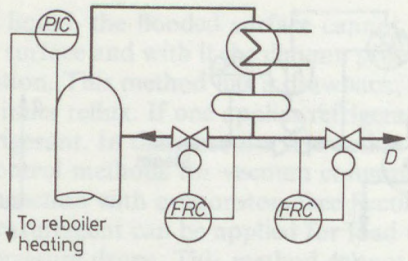


Fig. 6.30 Reflux ratio control scheme

between the manipulated (external) reflux and the reflux flow caused by this stream inside the column. If the reflux stream is supercooled to an extent which may change with time, internal and external reflux flows are not identical. Because separation depends on internal (true) reflux, this has to be manipulated. If the external reflux is cooler than the liquid on the tray at which it enters, heat from excess condensation has to be transferred in order to heat it up to the boiling temperature. The excess condensate increases the downflow and thus the internal reflux. Relationships can be described by equations developed for the internal reflux $R_i$

$$R_i = L = R_e(1 + K\Delta\vartheta), \tag{6–22}$$

where $R_e$ — manipulated external reflux flow;

$K$ — material property coefficient $\left(K = \frac{c_D}{r}\right)$;

$c_D$ — specific heat of external reflux;

$r$ — latent heat of condensing vapour;

$\Delta\vartheta$ — temperature difference between vapour temperature ($\vartheta_v$) and external reflux temperature ($\vartheta_R$).

Fig. 6.31 shows two possibilities for internal reflux controllers. One is constructed from conventional analogue controllers and pneumatic or electric relays, and one is a digital control system (TDC 2000). With the advanced digital control systems even more sophisticated control algorithms can be implemented. Optimum reference values for the controller can be obtained with a key component analyser.

### 6.6.4 CONTROL OF CONTINUOUS BINARY DISTILLATION

The standard scheme for illustrating distillation column control is a continuous two product column with total condensation, external reboiler, elevated condenser and accumulator and liquid product withdrawal. The degrees of freedom have been calculated above.

Two principles are generally applied for establishing control schemes:

(*i*) product quality control,
(*ii*) material balance control.

The cheapest method for composition measurement and control in binary distillation is to measure temperature at a fixed pressure. For multicomponent distillation with composition not exactly defined (e.g. crude oil), temperature control is the easiest possibility for product quality control. This is why most distillation control schemes contain temperature controllers for quality control. Product quality control schemes can be developed for distillate quality control or for bottom product quality control. Control systems are usually designed so that disturbances affect only the quality of the non-controlled product. These one point control schemes are usually stable. If both top and bottom products have to be controlled the design of a suitable (two-point) control system is quite difficult. Interactions between the control loops depend on details of column construction and feed composition. Decoupling control is possible with advanced control algorithms [6.13]. In indus-

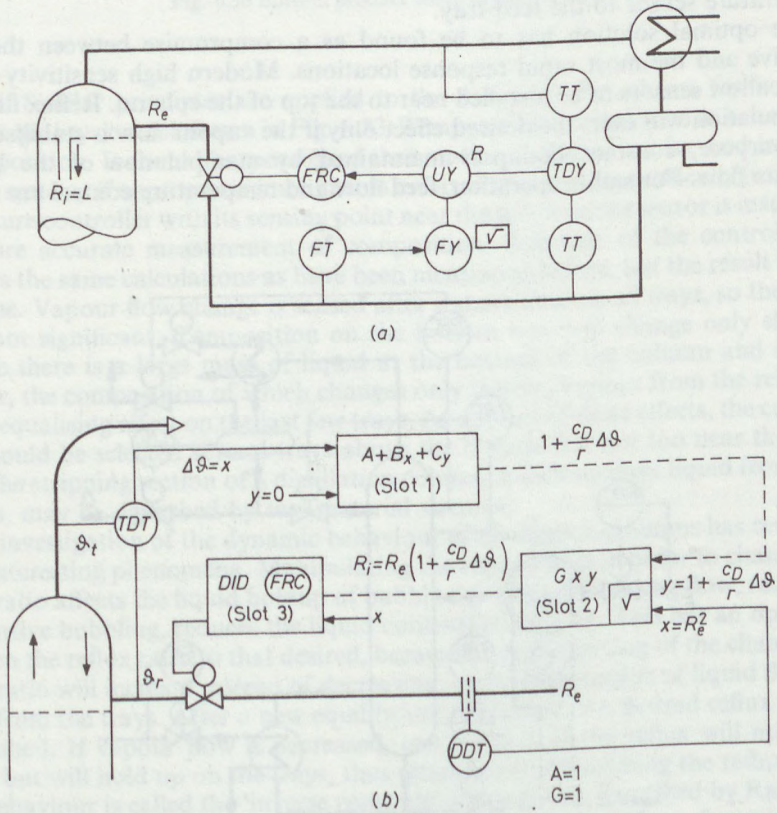


Fig. 6.31 Internal reflux control systems. (*a*) analogue system; (*b*) digital system (TDC 2000, Honeywell)

trial practice pure binary mixtures are rarely obtained, and it is therefore recommended to investigate the effect of absorbed gases and other components. Blowdown of noncondensables is manipulated by split range pressure control.

Fig. 6.32 shows a scheme for distillate composition control. The composition is controlled by reflux flow manipulation through a temperature controller, and constant pressure is maintained by coolant manipulation. To find the optimal location of the temperature sensor, it is necessary to investigate the temperature and concentration profile of the column. A change of reflux ratio changes the shape of the profile, and the rate of change differs from tray to tray. The temperature difference as a function of reflux ratio can be drawn for each tray, and trays of maximum sensitivity can be selected. In addition, the hydraulic behaviour has to be considered. Reflux flow rate manipulation has an immediate effect only at the top tray. Liquid flow rate rise will spread downwards, with a hydraulic lag. The number of trays between the reflux inlet nozzle and temperature sensor determines the time lag of the process. The two considerations have opposite effects on the sensor position. It has to be considered that the disturbances resulting from feed flow and feed composition are sensed earlier in relation to the proximity of the temperature sensor to the feed tray.

The optimal solution has to be found as a compromise between the most sensitive and the most rapid response locations. Modern high sensitivity instruments allow sensors to be installed near to the top of the column. Reflux flow rate manipulation will exert the desired effect only if the vapour flow is stabilised. For this purpose, constant boilup is maintained by manipulation of the heating medium flow. For stable operation, feed flow and temperature control are recom-

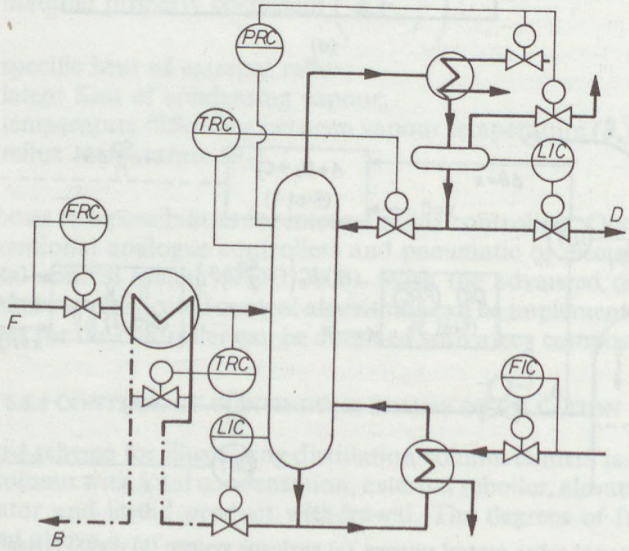


Fig. 6.32 Distillate composition control

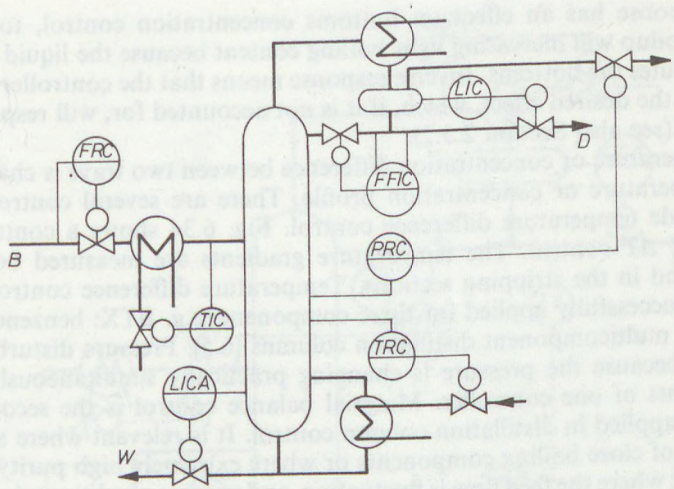


Fig. 6.33 Bottom product composition control

mended. Similar principles are applied to the design of the scheme for bottom product quality control shown in Fig. 6.33. Temperature is again used as a measure of composition. It should be mentioned that on-line analysers can be used in both control systems if appropriate instruments are available and economically justified. A pressure controller with its sensing point near the temperature sensor is installed, to ensure accurate measurement of composition. Selection of the control tray involves the same calculations as have been mentioned before, but the result is not the same. Vapour flow change is sensed after a short time on all trays, so the time lag is not significant. Composition on the bottom tray will change only slowly, because there is a large mass of liquid at the bottom of the column and in the reboiler, the composition of which changes only slowly. Vapour from the reboiler has an equalising effect on the last few trays. As a result of these effects, the control tray should be selected several trays above the bottom but not too near the feed tray. The stripping section of a distillation column, which receives liquid from two sources, may be disturbed by two material streams.

The investigation of the dynamic behaviour of distillation columns has revealed some interesting phenomena. Manipulating the vapour flow in order to change the reflux ratio affects the liquid holdup of bubble cap trays. Increasing flow, resulting in intensive bubbling, reduces the liquid content on the tray. This has an opposite effect on the reflux ratio to that desired, because at the beginning of the change the reflux ratio will increase instead of decreasing, due to the surplus of liquid flowing down from the trays. After a new equilibrium is reached, the desired reflux rate is established. If vapour flow is decreased, one portion of the reflux will not flow down, but will hold up on the trays, thus temporarily diminishing the reflux flow. This behaviour is called the 'inverse response' and was first described by Rademaker and Rijnsdorp [6.18] for bubble tray columns and by Nagy for grid tray columns with dynamics of an opposite sense [6.15] of the inverse response. The

inverse response has an effect on bottoms concentration control, too, in that increased boilup will increasing light boiling content because the liquid holdup of the trays dilutes the bottoms. Inverse response means that the controller senses the opposite of the desired effect, which, if it is not accounted for, will respond in the wrong way (see also Section 2.5.2).

The temperature or concentration difference between two trays is characteristic of the temperature or concentration profile. There are several control schemes which include temperature difference control. Fig. 6.34 shows a control system with double $\Delta T$ control. The temperature gradients are measured both in the rectifying and in the stripping sections. Temperature difference control schemes have been successfully applied for three component (e.g. BTX: benzene, toluene, xylene) and multicomponent distillation columns [6.5]. Pressure disturbances are eliminated because the pressure is changing practically simultaneously at both sensing points of one controller. Material balance control is the second design philosophy applied in distillation column control. It is relevant where separation of mixtures of close boiling components or where extremely high purity products are required; where the feed flow is fluctuating, and process conditions do not allow flow control; and where no direct on-line measurement of product quality is possible. When the feed composition is known and constant, the ratios of feed to distillate and distillate to bottoms can be calculated from the product specifications. The calculated flow ratios can be maintained by flow ratio controllers. The energy balance should be maintained for stable operation, and heat input and output control has to be incorporated into the scheme.

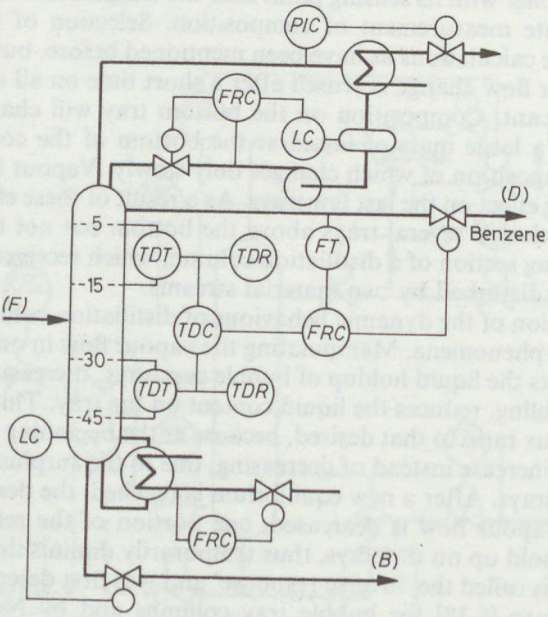


Fig. 6.34 Temperature difference control

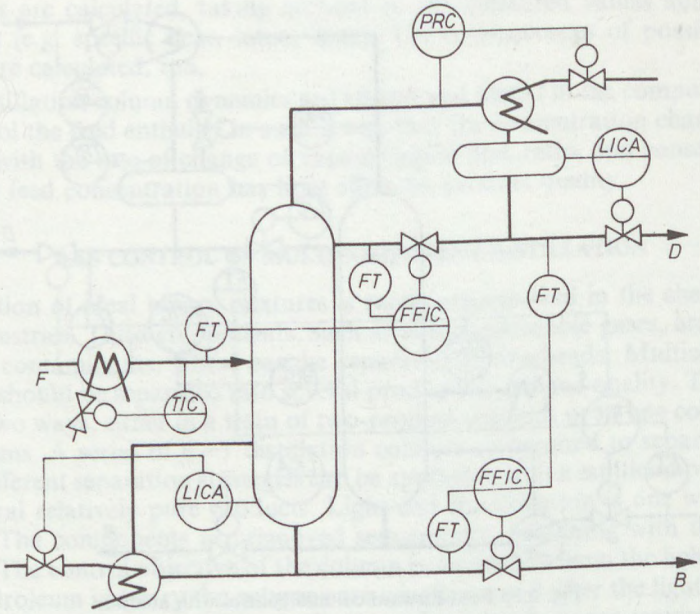


Fig. 6.35 Material balance control scheme

Fig. 6.35 shows a simple feed-forward material balance control scheme. Reflux flow is coupled to the feed flow and distillate flow governs the bottoms flow. Pressure and level controllers link the heat balance to the material balance. A level controller at the bottom, manipulating the boilup, restores the level rise by increasing the heat input and thereby the evaporation.

Increased vapour flow affects the distillate production, and distillate flow will increase the bottoms flow. The necessary (dynamic) compensating control elements are not shown in the scheme. Feed composition is practically never constant therefore material balance control cannot be operated for any extensive period of time without quality control. In advanced control systems, on-line analysers are installed to monitor and control product quality. An advanced control scheme is presented in Fig. 6.36. Reflux flow is coupled with vapour flow through reboiler heat input manipulation. Feed flow disturbances are compensated by feed-forward control. Distillate flow is coupled with feed flow, and the ratio is set by an on-line analyser. Cooling water consumption is controlled for energy conservation. This and similar control systems can be implemented with analogue devices but their implementation with direct digital control systems is straightforward.

An interesting example of a computer controlled subsystem is feed enthalpy control. The enthalpy of the column feed is an important design variable. Using the McCabe–Thiele method of design, feed enthalpy determines the slope of the so-called "$q$" line illustrated in Fig. 6.37. The intersection of the operating lines depends on the slope of the $q$ line. If feed concentration changes from the calculated $x_F$ value to a greater value $x_{F'}$ or a smaller $x_{F''}$ and its enthalpy is the same

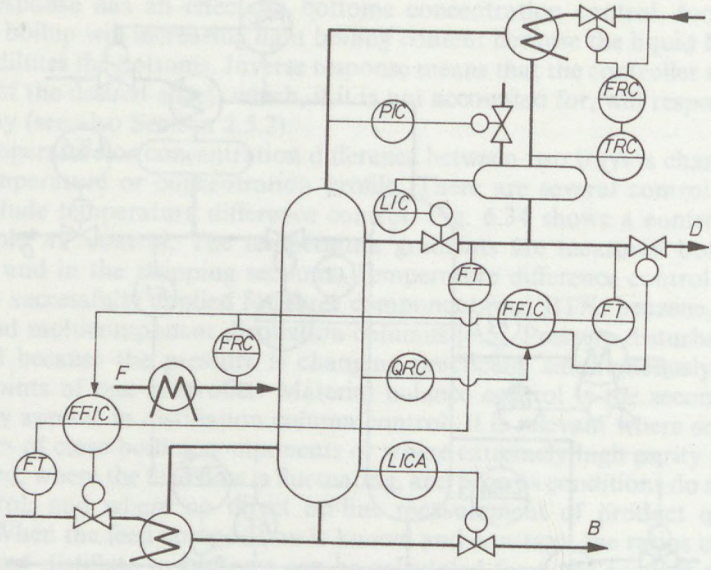


Fig. 6.36 Feed-forward column control with analyser

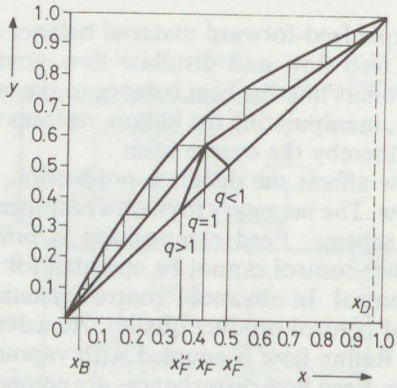


Fig. 6.37 Effects of feed enthalpy manipulation

as before, separation will be affected. The tray number is fixed, and reflux rate and boilup rate are constant. It is possible to compensate for composition change, between certain limits, by changing the feed enthalpy. The slope of the $q$ line has to be changed in such a way that the intersection of the operating lines should remain at its calculated point. This can be done by manipulating the heat input to the feed. An analyser measures feed concentration and the computer calculates the optimal feed enthalpy. With this value the set points of temperature and flow

controllers are calculated, taking account of the measured values and physical properties (e.g. specific heat, latent heat). The consequences of possible phase changes are calculated, too.

The distillation column dynamics are known and stored in the computer, which can control the feed enthalpy in such a way that the concentration change rate is identical with the rate of change of vapour–liquid flow ratio, and consequently a change in feed concentration has little effect on product quality.

### 6.6.5 CONTROL OF MULTICOMPONENT DISTILLATION

Separation of ideal binary mixtures is rarely encountered in the chemical and allied industries. Third components, such as non-condensable gases, are the most common contaminants. These can be separated as overheads. Multicomponent mixtures should be separated into several products of defined quality. This can be done in two ways, either in a train of two-product columns or in one column with side streams. A series of $n-1$ distillation columns is required to separate $n$ products. Different separation strategies can be applied to split a multicomponent feed into several relatively pure products. Light end fractionation is one widely used method. The components are removed sequentially, beginning with the lightest fraction. The control objective of the column is separation from the light fraction. In the petroleum industry the columns are usually named after the light fractions, e.g. debutanisers, depropanisers, etc. Pure overhead products are required in other plants. The control systems of the two product columns are similar to the binary column control systems already discussed. Quality control with the aid of on-line analysers is recommended.

Several methods and computer programs are available for the design of optimal separation. Because the column train is linked with the material and heat streams, the control system has to consider these interactions. In low temperature distillation it is common practice to use product streams as refrigerants and thus highly complex control problems have to be solved. Another separation method for multicomponent mixtures is illustrated in Fig. 6.38, which shows a typical atmospheric crude distillation tower used in the petroleum industry. The multicomponent crude oil is split into five or six fractions. The fractions are specified by their distillation curves, true boiling point (TBP), flash point and physical properties such as density, viscosity and Reid vapour pressure (RVP), and not by their chemical composition because they are complex mixtures containing several hundred chemical compounds. Besides the main distillation column there are side strippers to separate the side products from their light ends. The crude oil is preheated in a pipe still (e.g. Fig. 5.14) and fed at constant temperature and flow rate into the main tower. The feed and the product streams exchange their heat via a heat exchanger train, which is not shown in the scheme in order to keep the picture simple. Because of the large material and energy streams used in refineries, energy conservation is of great importance. The bottom product is withdrawn by a level controller and serves as the feed to the vacuum tower. To assure constant feed, a flow cascade is applied. The density of the bottoms is monitored. The top product is under temperature control by means of reflux flow manipulation. An analyser may correct the set point of the temperature controller, which is placed

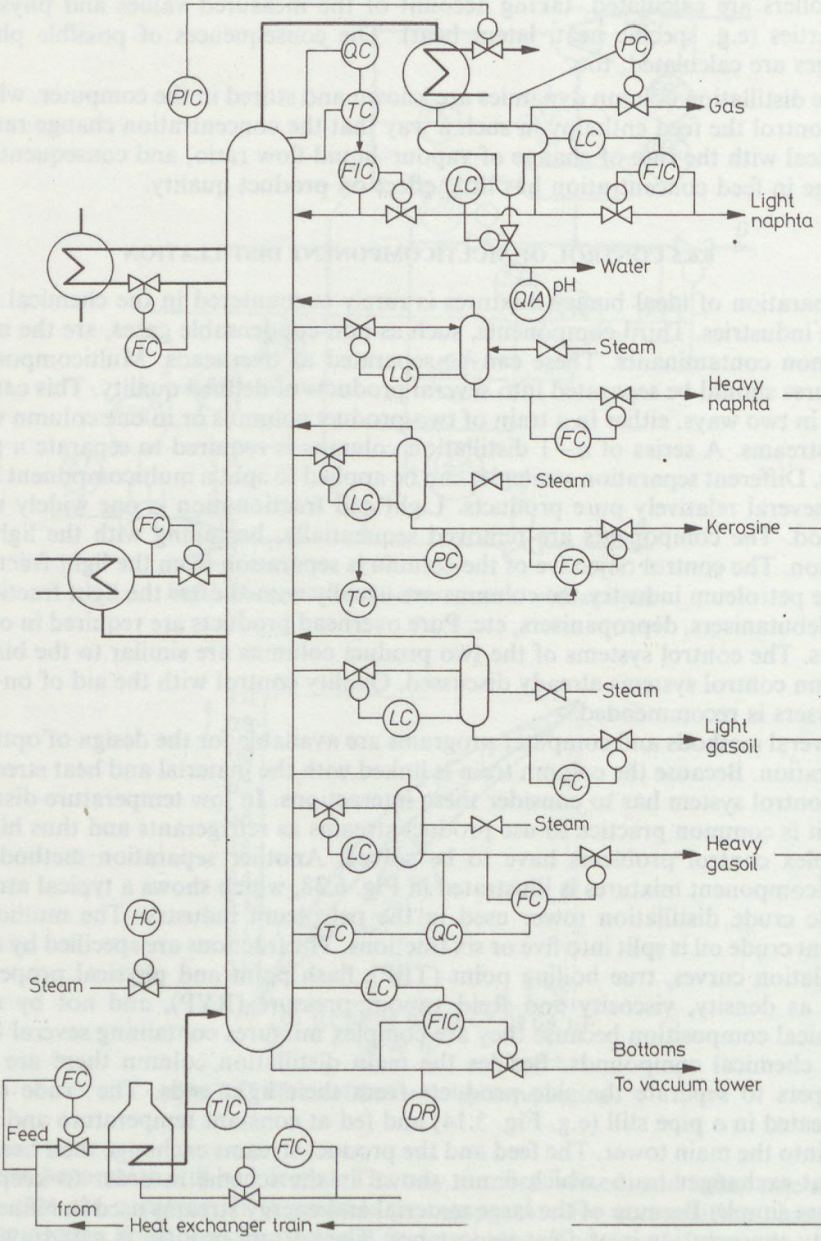


Fig. 6.38 Crude oil distillation column control

in series with a flow controller. The reflux accumulator has two level controllers, one for the product (in this case light naphta) withdrawal and one interface controller for water. It is the stripping steam which is condensed and separated in the accumulator. The acidity of the condensate is checked by a pH meter. The use of two level controllers illustrates the result of calculation of the degrees of freedom for control (see Chapter 2). The column pressure is controlled at the accumulator by bleeding off non-condensable gases.

Four side stream strippers are shown on the diagram. The side draw is manipulated by a level controller on the stripper. Product flow is under flow control. The set point of the flow controller can be corrected by draw tray temperature and/or product analysis. The stripping steam is generally set manually with the aid of a flow indicator and quality measurement. Pumparounds (circulating reflux streams) with heat exchange are manipulated in order to control separation. Flow controllers are installed to control the pumparound circuits. The control of heat exchanger trains represents a complex nonlinear mathematical relationship. Operating the system with optimum results within all of the system constraints represents a dynamic control problem which can only be solved by advanced computer control [6.20].

### 6.6.6 CONTROL OF BATCH DISTILLATION COLUMNS

Batch distillation has a long history and will enjoy a long future despite the increasing importance of continuous distillation. The control objective of batch distillation is to produce specified products at minimum cost, time also being considered in the calculation. Automatic control of batch distillation presents some interesting theoretical problems. Lord Rayleigh established a batch distillation equation in 1902. Automatic and optimal starting procedures for continuous distillation columns present similar theoretical problems to batch distillation, and this led to a clear formulation of the dynamic behaviour. Load control and reflux control will be discussed in the following.

#### *Load control*

The distillation column load is represented by the vapour flow. The vapour flow or boilup can be manipulated by heat input to the reboiler. When minimum time is the control objective, constant vapour flow is usually required. If the heating medium is steam, a simple method is to maintain constant pressure in the reboiler or kettle heater. This method, shown in Fig. 6.39*a*, generates a constant vapour load if the boiling point difference between the components is small and no significant temperature rise results from the rise of concentration. A more effective control can be achieved by the control of the steam flow rate (Fig. 6.39*b*), supplemented by steam pressure control if the steam header or steam supply pressure is variable. Temperature difference control, shown in Fig. 6.39*c*, results in a constant heat transfer rate provided no significant fouling occurs during a cycle. If molar latent heat does not change, then the molar flow will remain constant. A boiling point change is automatically compensated. Because of the time lag this system is not fast, but in practice there are no abrupt changes. Steam supply

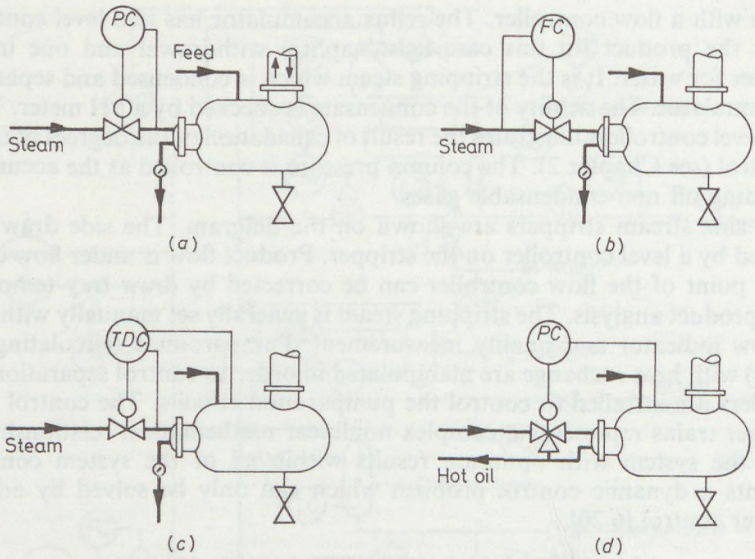


Fig. 6.39 Constant load control schemes. (*a*) steam pressure control; (*b*) heating fluid flow control; (*c*) temperature difference control; (*d*) kettle pressure control

disturbances can be eliminated by using a pressure or flow cascade controller. Temperature difference constraint can be enforced by using a limit switch or selective control. Constant kettle pressure can be controlled by heat input manipulation. This method is shown in Fig. 6.39*d* for a liquid heating medium (e.g. hot oil). With stable pressure at the top of the column, kettle pressure is in most systems a measure of load.

### *Reflux control methods*

When operating with constant boilup, the reflux rate is the only variable which can be manipulated to control product quality. This can be done by four methods:

(*i*) maintaining constant reflux ratio;
(*ii*) maintaining constant product quality by changing reflux ratio;
(*iii*) cyclic operation (alternating total reflux and total discharge);
(*iv*) alternating vapour flow (full stream and shut off).

The oldest and the simplest method is splitting the condensate, which can be done with a mechanical device. A hydraulic reflux splitter is cheap, and can be monitored by two flowmeters, usually rotameters. An automatic reflux ratio control scheme is shown in Fig. 6.40 for a forced circulation reflux pump. A flow ratio controller is applied, which can also be used for changing the reflux ratio. A level controller

is installed on the accumulator. Manipulation of the control valves can be interchanged between the two controllers.

During the distillation process the concentration of the liquid in the kettle changes continuously and with it the vapour, consequently the product concentration will change. The resulting concentration can be calculated by the equation

$$Wx_w = W_0 x_0 - D \int y \, dt. \tag{6–23}$$

Under constant distillate flow conditions, the concentration changes gradually and the average distillate concentration changes with it. After the specified concentration in the first receiver is attained, the distillate flow has to be switched to the second receiver, and so on. If the kettle is fed with raw material of constant composition a simple time cycle control is sufficient. When the feed quality is liable to change analysis of each charge is required. Continuous on-line analysis of the product is useful. Instruments ranging from simple density meters, like a swimming aerometer, to sophisticated registering and control instruments are available, but their application has to be economically justified. With the aid of product analysers, the second control method can be installed. With changing residue concentration the reflux ratio has to be changed to produce a product of constant quality. Initially a small reflux ratio is sufficient, which implies a large distillate flow. At the end, theoretically, total reflux and zero product flow are required. The minimal product flow can be calculated for practical application. Fig. 6.41 shows the costs

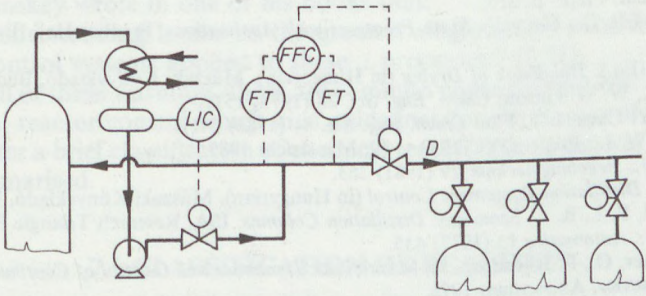


Fig. 6.40 Batch column control with constant reflux ratio

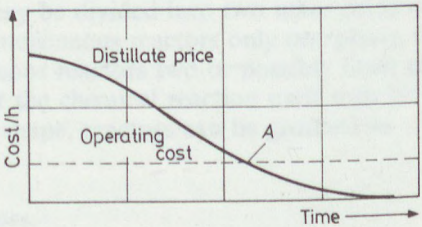


Fig. 6.41 Batch distillation cost analysis

of distillation as a function of distillation time. Product value and operating costs are calculated for a given equipment and material. Operating costs are constant if the load is constant. The product of unit value multiplied by output is called the produced value. The breakeven point $A$ is indicated on the diagram. Reflux flow can be controlled by a temperature controller if the boiling point differences are large enough.

The optimum operating mode depends on the relative volatilities of the components and the product specification. The optimum operating line generally lies between the lines of constant reflux rate and constant distillate composition. Robinson [6.19] suggested the use of a special separation coefficient for detailed calculation. Full automation of batch distillation equipment can be achieved by applying sequential control systems with either PLC or DDC control devices.

## REFERENCES


[6.1] Alan, D. R. (Ed.): *AIChE Symp.* Ser. N193 (1980) 76.

[6.2] Azevedo, De S. F., M. M. Goncalves: Prepr. DYCORD+ 89, Maastricht 1989, p. 3.

[6.3] Buckley, P. S., W. L. Luyben, J. P. Shunta: *Design of Distillation Column Control Systems.* ISA, Research Triangle Park 1985.

[6.4] Carr-Brion, K.: *Moisture Sensors in Process Control.* Elsevier, New York 1987.

[6.5] Cheng Ching Yu., L. Luyben: *Ind. Eng. Chem. Process Des. Dev.* 23 (1984) 590.

[6.6] Deshpande, P. B.: *Distillation Dynamics and Control.* ISA, Research Triangle Park 1985.

[6.7] Fink, P., H. Schelling: *Regelungstech. Prax.* 19 (1977) 299.

[6.8] Gilliland, E. R., N. Reed: *Ind. Eng. Chem.* 34 (1942) 551.

[6.8a] Göttmann, O., B. Betzbach: *Use of State Observers for Control and Profile estimation of a Large-scale Nitric Acid Absorption Column.* In Dycord '89, IFAC Symposium Aug. 21–23, 1989, Maastricht. Prepr. p. 219.

[6.9] Holland, Ch. D.: *Unsteady State Processes with Applications.* Prentice-Hall, Englewood-Cliffs 1966.

[6.10] Imre, L. (Ed.): *Handbook of Drying* (in Hungarian). Műszaki Könyvkiadó, Budapest 1974.

[6.11] Jones, D., W. Wilkinson: *Chem. Eng. Sci.* 28 (1973) 1577.

[6.12] Lai, F., Y. Chen, I. T. Fan: *Chem. Eng. Sci.* 41 (1986) 2419.

[6.13] Luyben, W. L.: Prepr. DYCORD+ 89, Maastricht 1989.

[6.14] Mann, W.: *Regelungstechnik* 29 (1981) 263.

[6.15] Nagy, I.: *Distillation Equipment Control* (in Hungarian). Műszaki Könyvkiadó, Budapest 1974.

[6.16] Nisenfeld, E. I., R. C. Seemann: *Distillation Columns.* ISA, Research Triangle Park 1981.

[6.17] Ochiai, S.: *Automatica* 13 (1977) 435.

[6.18] Rademaker, O., E. Rijnsdorp, A. Maarleveld: *Dynamics and Control of Continuous Distillation Units.* Elsevier, Amsterdam 1975.

[6.19] Robinson, E. R.: *Chem. Proc. Eng.* 52 (May 1971) 47.

[6.20] Shinskey, F. C.: *Distillation Control for Productivity and Energy Conservation.* McGraw-Hill, New York 1977.

[6.21] Wang, J. C.: *ISA Transactions* 20 (1), (1980) 3.

CHAPTER 7

# CONTROL OF CHEMICAL REACTORS

Control of chemical reactors is a difficult and very complex task. The joint efforts of process and control engineers trained in the design of unit operations control are usually not sufficient, and a chemist or process engineer with a profound knowledge of the chemical reaction kinetics has to be consulted. Several well-known authors have emphasized the difficulties of reactor control, e.g. Franks R. G., who writes:

"Unlike unit operations dealing with separation such as distillation columns or with phase change such as condensers, it is most difficult to generalise reaction kinetics, and virtually useless to create general unit operations subroutines as is done for other common operations. The reason of course is that almost every reaction is unique...

The influences of catalysts, heterogeneous mechanisms and multiphase energy transfer within the reactor environment, all greatly expand the different varieties of reaction mechanisms and process geometries."

F. G. Shinskey wrote in one of his books that:

"Lack of understanding looms as the greatest single factor contributing to the failure of control systems applied to these ... processes." [2.21].

Despite all of these warnings, there are common control objectives and methods for chemical reactor control which give guidelines for the design of such control systems. After a brief classification of chemical reactors, some general control rules will be summarised.

## 7.1 CLASSIFICATION OF REACTORS

Chemical reactors may be classified according to several viewpoints. The number of phases, reaction mechanism, energy generation, mode of operation, or pressure and conservation laws may be the characteristic factors. Classification is always arbitrary. Reactors may be divided into two main categories: homogeneous and heterogeneous. In homogeneous reactors only one phase, usually gas or liquid, is present. In heterogeneous reactors two or possibly three phases are present. In a heterogeneous reactor the chemical reaction itself may be homogeneous.

According to their shape, reactors can be grouped as

tank reactors,
tubular, flow reactors,
flame reactors,

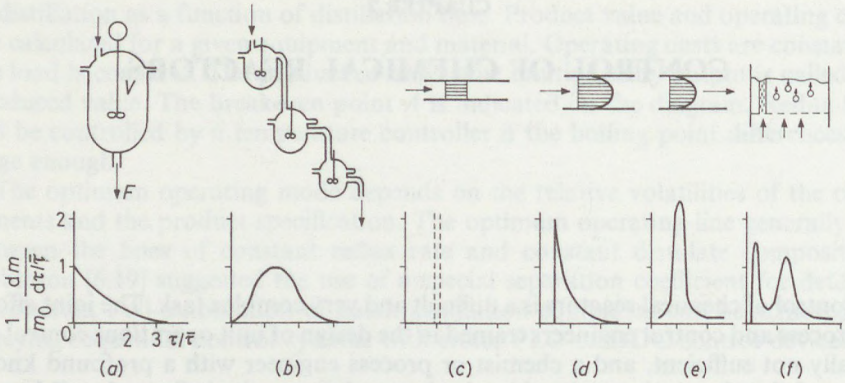


Fig. 7.1 Typical residence time distribution $E$ curves of reactors. (*a*) ideal stirred tank; (*b*) stirred tank reactor cascade; (*c*) plug flow; (*d*) laminar flow; (*e*) turbulent flow pipe reactor; (*f*) fluid bed reactor with channelling and dead zone

furnaces or kilns,
electrolytic reactors.

Another classification is based on the mode of operation, with batch and continuous operations both commonly known, but semi-batch operation is often used in industry where, for example, a liquid is to be contacted with a gas whose volume is too great to be introduced into the reactor all at once. It is also applied to the control of highly exothermic reactions. In some cases reactant is added to a continuous reactor (cascade or tubular), divided between several feed points. These are sometimes called cross-flow reactors. A chemical reaction may need a catalyst, and in most cases heterogeneous catalysis is used. The change of catalyst activity is an important variable which has to be considered when planning reactor control systems.

The heat of reaction is another mode of classification. There are

exothermic (heat generating), and
endothermic (heat consuming) chemical reactions.

Endothermic reactions are usually easily controllable; most of the difficulties are caused by exothermic chemical reactions. According to heat transfer, the operation of reactors may be adiabatic, isothermal, or they may operate with a programmed thermal trajectory. Heat transfer may be direct or indirect.

A characteristic of reactor behaviour is the residence time distribution or exit age distribution curve, which is called the '$E$ curve' in several publications. Fig. 7.1 shows the $E$ curves of typical continuous reactors. The average residence time $\bar{\tau}$ is the ratio of inventory and flow

$$\bar{\tau} = \frac{V}{F}, \tag{7–1}$$

where $V$ — volume of reagents in the reactor;
$F$ — volumetric flow rate into the reactor.

## 7.2 GENERAL CONTROL RULES FOR REACTORS

The main objectives of chemical reactor control are:

— to sustain product quality,
— to maximise production yield,
— to maintain safe operation,
— to conserve energy,
— to minimise human supervision.

Several reactors are operated under conditions of partial conversion, where the product is separated from the outflow and the remaining reactants are recirculated. Control of the recirculation is inseparable from reactor control proper.

General problems of reactor control can be classified into three groups:

(*i*) preparation and feeding of reactants and additives;
(*ii*) control of the physical conditions required by the reaction, especially temperature and pressure, including safety constraints;
(*iii*) control of the reaction process, conversion and quality control of the product.

A great difficulty of reactor control is that even the simple, ideal, perfectly-mixed tank reactor has a particular dynamic behaviour (several stable states, highly nonlinear effects) which makes the application of the standard methods of linear control theory dubious or restricted to a very narrow operating range.

### 7.2.1 REACTOR FEED CONTROL

Charging of batch reactors through feed vessels with level indicators is the oldest method which can be modernised and connected to sequential control by the installation of level switches or transmitters. Loss-of-weight feeders can be used if the vessel is situated on a scale or load cell. Volumetric charging can be controlled by positive displacement flowmeters with special charging devices and valves. In some cases charging with the aid of the level indicator of the reactor vessel is sufficient. All the abovementioned methods, except for the weighing method, are only suitable for liquids with a fairly constant density or concentration. The same is also true for metering pumps.

Continuous reactor feed streams are usually controlled by flow or ratio controllers (see Chapters 2 and 4), including metering pumps. Feed control as a function of the material contented in the reactor inventory control is possible if the reactant and the product phases are different. In the case of a gas product, level control in the reactor vessel through feed manipulation is effective. If the product is a liquid, a gas reactant feed may be under pressure control since pressure is a measure of gas content. Product outflow is in this case controlled by the liquid level, unlike the

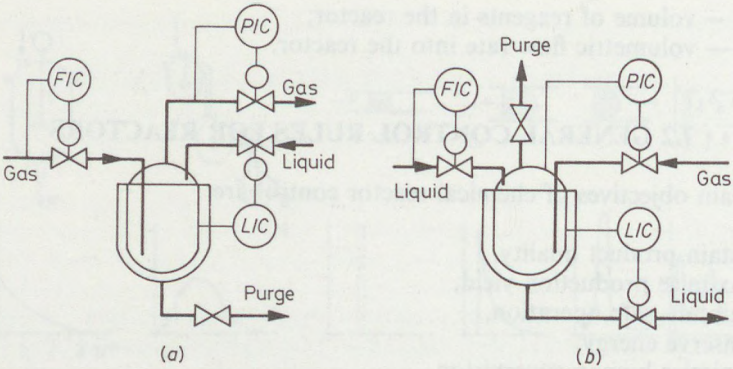


Fig. 7.2 Reactor material balance (inventory) control schemes. (*a*) gaseous product; (*b*) liquid product

former case, where outflow is under pressure control. The principal control schemes are shown in Fig. 7.2. In order to sustain stable feed conditions, pressure control is required for gas streams. If the composition of the reactants is variable, quality control and compensation are necessary, e.g. end point control. Feed temperature is usually of great importance and has to be stabilised.

### 7.2.2 CONTROL OF REACTOR OPERATION

The rate of reaction in a reactor depends on the concentration of the reactants and on the reaction rate coefficient $k$. This coefficient exponentially increases with temperature according to the well-known Arrhenius equation

$$k = \alpha \exp\left(-\frac{E}{RT}\right) \tag{7–2}$$

where $E$ — activation energy;
$R$ — universal gas constant;
$T$ — absolute temperature;
$\alpha$ — preexponential factor.

Consequently temperature control is the most important feature of reactor control systems.

*Temperature control of reactors*

Temperature control schemes depend on the cooling and heating system. Direct and indirect heating and/or cooling may be used, but it must be remembered that, to a great extent the success of a reactor control system depends upon how well the reactor is designed. It is possible to design a reactor so that it is unstable no matter what kind of control system is employed. Sensitivity to temperature change is

usually high: a temperature rise of 1 K may rise the heat developed by the reaction by 10 to 15%.

Direct heat transfer is applied if the feed is cooled or heated, if cool gas is injected into the reactor or liquid is injected which evaporates and thus cools the system by its latent heat. An example of the last-mentioned method is shown in Fig. 7.3. In a synthesis gas plant, the carbon monoxide converter is used to convert the CO content of the gas by means of steam to hydrogen and $CO_2$ gas. Instead of feeding more steam, water is injected which evaporates and thus absorbs the heat of reaction. The temperature controller (TRC-2) manipulates the water flow rate. In the last stage steam injection provides sufficient cooling (TRC-3). For energy conservation the feed stream is preheated by the outflow from the reactor and controlled by controller TRC-1 which manipulates the bypass valve since neither the feed nor the outflow can be manipulated directly. Indirect cooling or heating through a pipe coil, jacket, tube bundle, etc., is similar to heat exchanger operation, with some particular features of its own. A jacketed tank reactor is typical of this type of system and will be presented later.

Somewhere between direct and indirect heat transfer are those methods which apply indirect heat exchange outside the reactor, from where the cool or condensed fluid flows back into the reactor. A typical example is the reflux or condensation cooling of batch tank reactors. This method affords a natural pressure control and relief system (see Fig. 6.3).

A special method of reactor temperature control is manipulation of the reaction, i.e. the amount of heat of reaction. In semi-batch (or semi-continuous or fed-batch) reactors the feed stream of the second reactant can be manipulated via a tem-

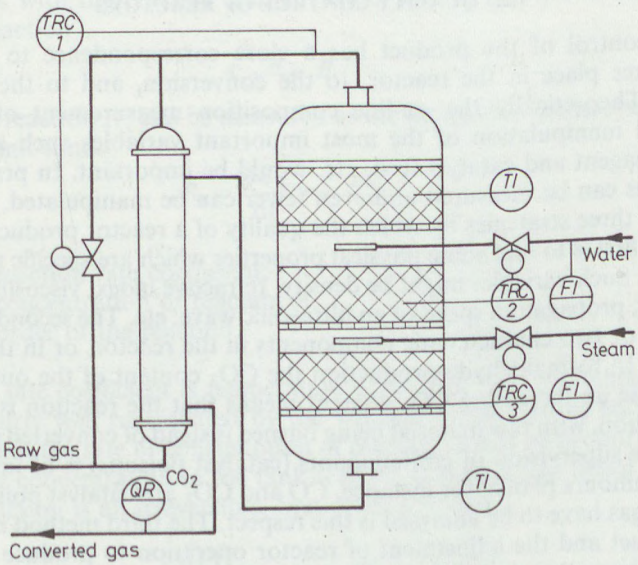


Fig. 7.3 CO converter reactor control scheme

perature controller. In batch or continuous reactors an additive, which is called the inhibitor, is injected to quench the reaction and thus the generation of heat.

In order to obtain a rapid temperature measurement response the sensor should be small and well located. In cases where viscosities are very high or where material build up is severe, it may not be possible to obtain a temperature measurement very quickly. There are many processes in which pressure can be used as a rapid indication of changes in temperature.

*Pressure control and safety systems*

In gas phase reactions and high pressure polymerization the reaction rate is a function of pressure. Examples of reactor pressure control are shown in Fig. 7.2. Certain reactions not only absorb the process gas feed but also generate by-product gases. Here the feed is under flow control and reactor pressure is controlled by manipulating the gas by-product vent line valve. If necessary a vent condenser is supplied in order to prevent excessive loss of reactor products through the vent.

Pressure relief valves are usually prescribed by national safety codes and form part of the reactor safety system. For safe operation various protective controls are required (overrides and interlocks). The main danger is high temperature, and therefore the safety system has to include high temperature, loss of coolant, and loss of agitation or circulation interlocks. The safety system has to prevent the reactor from being fed at a rate that is too fast for the cooling system to handle. The reactor feed system needs several overrides to save material and energy and to prevent dangerous situation. For safe start up and shutdown a special subsystem is required.

### 7.2.3 QUALITY CONTROL OF REACTORS

Quality control of the product has a close correspondence to the way the reaction takes place in the reactor, to the conversion, and to the by-products generated. Theoretically the on-line composition measurement of the reactor content and manipulation of the most important variables such as pH, redox potential, reagent and catalyst feed, etc. would be important. In practice, only a few variables can be measured and even fewer can be manipulated.

There are three strategies by which the quality of a reactor product can be controlled. The first is to find some physical properties which are specific to the state of the reaction. Such variables might be density, refractive index, viscosity, pH, dielectric constant, propagation speed of an ultrasonic wave, etc. The second method is to analyse one or two characteristic components in the reactor, or in the outflow of the reactor. In formaldehyde production the $CO_2$ content of the outflow is measured because an increasing $CO_2$ content means that the reaction is going in the wrong direction, with raw material being burned instead of converted (see Fig. 8.1). Similarly the supervision of contaminants (catalyst poisons) is of importance. In synthetic ammonia plants, for instance, CO and $CO_2$ are catalyst poisons and feed and recycle gas have to be analysed is this respect. The third method is the analysis of the product and the adjustment of reactor operation to produce the required quality. In the ammonia plant mentioned above, the ammonia ($NH_3$) content of

the outflow and of the recycle gas is analysed continuously. Other reagents and inerts are analysed, too ($H_2$, $CH_4$, etc.) in order to obtain the necessary information for quality control. On-line gas analysers are generally expensive (e.g. gas chromatographs) but in large capacity plants they are economically justifiable.

Advanced control methods can help to control chemical reactors without the need for direct measurement of composition. If a model of the reaction is available model reference control may be applied. From input data and conventional measurements (temperature, pressure, time) it is possible to calculate the composition in the reactor with the aid of the model and this value can be used for control of the reactor. The model has to be updated periodically with a corresponding analysis performed in the laboratory.

## 7.3 CONTINUOUS STIRRED TANK REACTOR

The greatest number of reactors in industry are the tank reactors, it seems therefore reasonable to begin with the both scientifically and practically well-known continuous stirred tank reactor, the CSTR. The modelling and control of a CSTR is the main theme of Luyben's [7.8] textbook for chemical engineers. To understand the dynamic behaviour and control problems of a CSTR a simple model with an overall view of reactor kinetics will be presented.

### 7.3.1 MODELLING THE CSTR

The fundamentals of reaction kinetics can be demonstrated relatively easily with the aid of the continuous stirred tank reactor. The mathematical description of a reactor begins with the reaction rate equation. Let us consider a homogeneous irreversible reaction

$$A \xrightarrow{k} B. \tag{7–3}$$

The rate of reaction $R_A$ can be measured as the moles of $A$ transformed per unit volume and unit time

$$R_A = \frac{dC_A}{dt} = k_1 C_A^n, \tag{7–4}$$

where $k_1$ — reaction rate coefficient;
$C_A$ — concentration of reactant $A$;
$n$ — order of the reaction.

The reaction rate coefficient is temperature dependent, and the influence of temperature is fairly well represented by the well-known Arrhenius equation (7–2). This means that the rate of consumption of reactant $A$ will be proportional to the instantaneous concentration in the tank reactor. If the reactor vessel has a filling $V$ and the reaction is an irreversible, first-order reaction

$$\frac{dVC_A}{dt} = -Vk_1C_A. \tag{7–5}$$

The dynamic component balance equation of the CSTR can be written as follows:

| | | | | | | |
|---|---|---|---|---|---|---|
| Rate of accumulation of reactant within volume element | = | Rate of flow of reactant into the reactor | − | Rate of flow of reactant out of the reactor | − | Rate of reactant removal by reaction out of volume element |

thus

$$\frac{d}{dt} VC_A = F_i C_{Ai} - F_0 C_{A0} - Vk_1 C_{A0}, \tag{7–6}$$

where $F$ — rate of flow.

It has to be mentioned that, in most cases, more than one reactant participates in the reaction, each having its individual coefficient, concentration, stoichiometric constant, etc.

The rate of heat generation $Q$ due to a reaction is proportional to the consumption of reactant $A$

$$Q_A = -Vk_1 C_A \Delta H, \tag{7–7}$$

where $\Delta H$ is the heat of reaction and, by convention, is considered negative for an exothermic reaction. The energy equations usually take account of internal energy, shaft work, kinetic energy and potential energy, but in our simple model only the heat balance is considered.

The heat balance equation is:
Heat accumulation = Heat inflow–Heat outflow–Absorption of heat by the chemical reaction(s).

Heat flow may be of three kinds: sensible heat of the inflow and outflow, latent heat removal by evaporation and condensation and heat transfer through surfaces. Since the rate of reaction also depends on the temperature, the material balance and heat balance equations have to be solved simultaneously. Using the mathematical models it is possible to simulate the reactor behaviour digitally.

In practice there are usually several consecutive and parallel reactions, which make the model rather complex. If there is a consecutive reaction e.g.

$$A \xrightarrow{k_1} B \xrightarrow{k_2} C \tag{7–8}$$

the concentration change in the reactor has to be supervised in order to achieve

optimal operation. Fig. 7.4 shows the concentration diagrams of a batch reactor. The valuable product is $B$ and $C$ is considered as waste, therefore the reaction has to be stopped if $C_B$ begins to diminish, or at an optimum point.

### 7.3.2 CONTROL OF THE CSTR

Reactor temperature being the principal variable in the equations of state, temperature control is the first objective in reactor control. The heat input along with the feed can be manipulated by feed temperature. Heat removal through cooling coils, the vessel jacket or other construction can be manipulated by the methods of heat exchanger control. The overall heat balance in the steady state is

$$Q_A = Bc_p(T_2 - T_1) + UA_h(T_2 - T_c), \tag{7–9}$$

where $Q$ is the rate of heat generation. The rate of heat generated by a reaction depends on the temperature and is characterised by an S-shaped (sigmoid) curve as shown in Fig. 7.5. The rate of heat removal is linear with $T_2$ and the terms are represented by straight lines. To satisfy the heat balance equation the point representing the actual operating temperature must lie at the point of intersection of the heat generation curve and the total heat removal line. The starting point and slope of the heat removal line can be altered by changing the feed temperature or

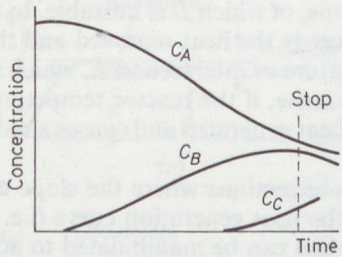


Fig. 7.4 Concentration changes in a batch reactor

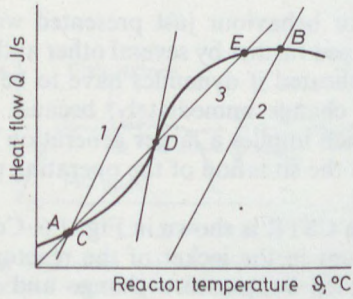


Fig. 7.5 Heat flow in a reactor (Sigmoid curve)

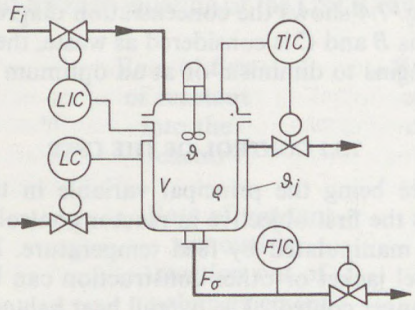

Fig. 7.6 CSTR control scheme

the cooling medium temperature. This is the principle mean by which the reactor can be controlled. The heat transfer coefficient is considered to be constant, but this is not true for all processes over long time periods.

The behaviour of the reactor can be studied with the aid of the intersections in Fig. 7.5. The heat removal line 1 and the reaction curve have one intersection at point *A*, which is a stable operating point with low conversion. If the temperature in the reactor increases the reaction rate will increase too, but the heat removal rise is faster and the temperature of the reactor will come back to the original operating point. Point *B* is a similar intersection point with line 2, but with high conversion. Line 3 has three intersections, of which *D* is unstable. In the event of a temperature rise the heat generated exceeds the heat removed and the reaction rate speeds up until it reaches the temperature of intersection *E*, which represents a stable operating point. In the opposite sense, if the reactor temperature falls from point *D* the heat removed exceeds the heat generated and causes a reduction of the reaction rate to point *C*.

Operation is stable at intersections where the slope of the heat removal line is steeper than the slope of the heat generation curve (i.e. tangent). With an appropriate control system, the line can be manipulated to achieve stable operation. In some cases there is a danger of 'runaway', which means an increase of reaction rate at a speed which cannot be regulated by the standard heat transfer. A special safety system has to be installed with inhibitor injection, direct cooling or other necessary measures.

The analysis of reactor behaviour just presented was first published by Van Heerden [7.4] and developed further by several other authors [7.11], [7.17]. The real behaviour is more complicated if dynamics have to be considered. The reactant concentration does not change immediately, because considerable amounts of material are present, which implies a larger generation of heat than indicated on the curve. Depending on the situation of the operating point, a doubled heat flow may result.

A control scheme for a CSTR is shown in Fig. 7.6. Cooling takes place through evaporation of the coolant in the jacket of the reactor vessel. The boiling temperature can be controlled by pressure change and the transfer area can be manipulated by jacket liquid level change if necessary.

## 7.4 BATCH PROCESS CONTROL

Batch processing is widely used in the chemical process industries and the most common examples are found in the production of paints, adhesives, plastics, pharmaceuticals and fine chemicals. Processes vary from a single reactor making multiple products to multiple units dedicated to a single product. Full automation of batch processes is feasible with modern control techniques. Batch processes are cyclic, passing through a series of phases such as charging a vessel, processing its content, discharging and transferring products to some downstream equipment. Sequential process control systems used for batch process automation include all necessary functions from recipe storing and selection, charging, programmed heating and cooling to discharging and cleaning.

### 7.4.1 HEATING CONTROL LOOP BEHAVIOUR

Batch processes are frequently, if not always, in transient states of operation and this poses some problems with controllers designed for continuous processes. If a batch reactor has to be heated up, the problem with a PI temperature controller is saturation (reset windup) of the controller; its output will be driven off scale. Overshoot of the reactor temperature may be the result, which is intolerable, so overshoot protection has to be applied.

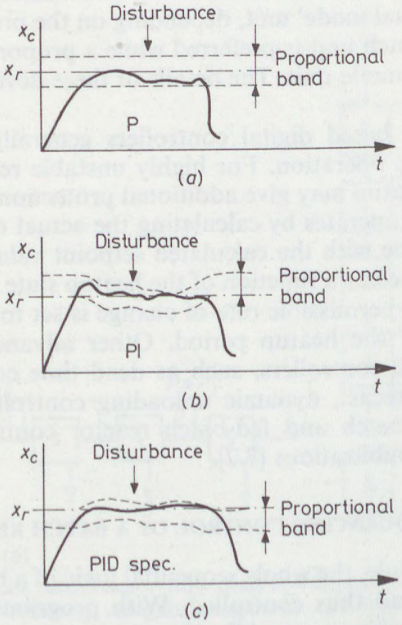


Fig. 7.7 Start up behaviour of controllers. (*a*) proportional controller; (*b*) proportional + integral controller; (*c*) proportional + integral + derivative with special structure switching (adaptive overshoot protection)

The use of a *P* controller will not cause serious overshoot in most cases, but after reaching the preset temperature, all load changes will produce continuous deviations and exact control is not achieved. This is shown in Fig. 7.7*a*. The integral mode (reset) will compensate the smallest deviation in cases of load change, but causes overshoot. A special anti-windup circuit disables the *I* (integral) mode if the output exceeds a certain limit. The reset kick controller uncouples one integral time from the extrapolated crossing of temperature line with setpoint line, ensuring that the reactor should come smoothly under control. The problem with this controller is that the integral time appropriate for start-up is generally different from the time required in the steady-state region. A switch can be installed to alter this. The structure of the controller can be switched, if a PD controller is preferred during start-up. In Figures 7.7*b* and *c*, the behaviour of the control loop can be seen [7.12].

Another overshoot protection method is the 'derivative on measure'. A derivative term is connected between the transmitter and the controller. The controller is 'fooled' by adding a derivative to the measured signal. If the temperature increases at a constant rate the controller begins to decrease its output before reaching the reference point, because of the derivative term. This method has the drawback of amplifying disturbances in the measured variable. Both overshoot protection methods rely on the assumption that a standard algorithm will furnish proper corrective action for the process if applied at the proper time.

The increasing demand for advanced batch control systems has resulted in the development of two types of features added to conventional PID controllers, the 'batch unit' and the 'dual mode' unit, depending on the proportional band. If this is less than 50% the batch unit is preferred while a proportional band wider than 50% requires the dual mode unit. The details of these devices can be found in the literature [7.7].

The microprocessor based digital controllers generally provide batch mode control with adjustable operation. For highly unstable reactors the rate of temperature rise during heatup may give additional protection against runaway. This type of control system operates by calculating the actual rate of temperature rise and compares this value with the calculated setpoint value. The setpoint of this controller is programmed as a function of the heatup state. Toward the end of the period the value of the permissible rate of change is set to be much lower than it is at the beginning of the heatup period. Other advanced algorithms can be programmed into these controllers, such as dead time compensating predictive control, delay time forecast, dynamic unloading control, etc. [7.1], [7.13]. The increasing interest in batch and fed-batch reactor control has resulted in an increasing number of publications [7.2].

### 7.4.2 SEQUENCING CONTROL OF A BATCH REACTOR

Besides its time schedule, the whole sequential logic of a batch reactor operation can be programmed and thus controlled. With programmable controllers it is possible to load new programs rapidly into the system. The primary results of programmed control are increased throughput and improved quality control.

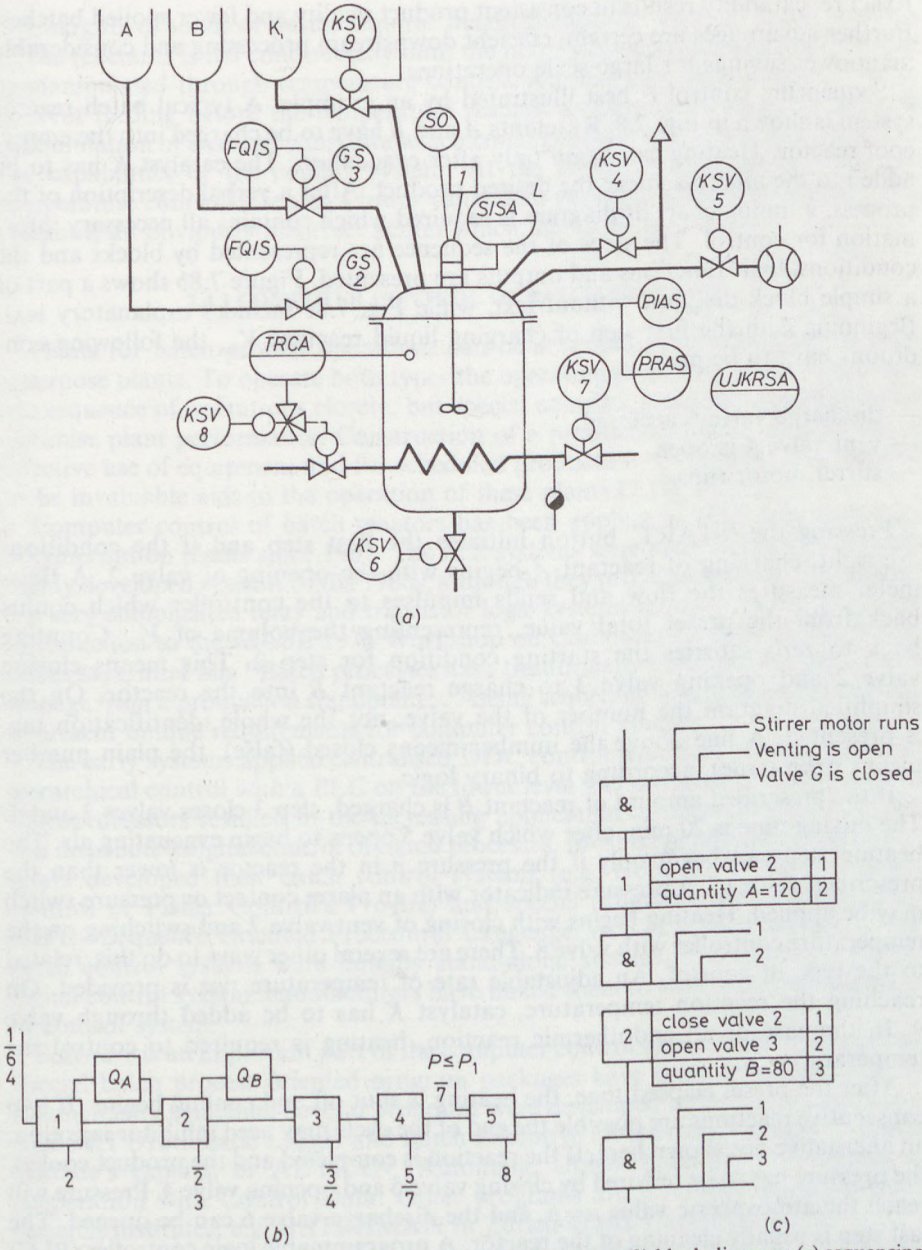


Fig. 7.8 Sequencing control of a batch reactor. (*a*) process flowsheet; (*b*) block diagram; (*c*) sequencing flowchart. *1* motor starter; *2* feeding valve for component *A*; *3* feeding valve for component *B*; *4* venting; *5* vacuum line valve; *6* let down valve; *7* heating coil venting valve; *8* three-way solenoid valve in the pneumatic actuating line of the temperature controller; *9* catalyst feeding valve

Exact repeatability results in consistent product quality and fewer spoiled batches. Further advantages are certain, efficient downstream processing and considerable manpower savings for large scale operations.

Sequencing control is best illustrated by an example. A typical batch reactor system is shown in Fig. 7.8. Reactants *A* and *B* have to be charged into the empty, cool reactor. Heating can begin only after evacuation. The catalyst *K* has to be added to the mix to achieve the desired product. After a verbal description of the process, a timing chart or diagram is required which contains all necessary information for control. The steps of the sequence are represented by blocks and the conditions, logic functions and outputs are presented. Figure 7.8*b* shows a part of a simple block diagram without text, while Fig. 7.8*c* includes explanatory text. Beginning with the first step of charging liquid reactant $V_A$, the following conditions have to be met:

— discharge valve 6 is closed,
— vent valve 4 is open,
— stirrer motor runs.

Pressing the 'START' button initiates the first step and if the conditions are right, charging of reactant *A* begins with the opening of valve 2. A flowmeter measures the flow and sends impulses to the controller which counts back from the preset total value, representing the volume of $V_A$. Counting back to zero satisfies the starting condition for step 2. This means closing valve 2 and opening valve 3 to charge reactant *B* into the reactor. On the simplified diagram the number of the valve, not the whole identification tag, is presented. A line above the number means closed (false), the plain number means open (true), according to binary logic.

If the prescribed amount of reactant *B* is charged, step 3 closes valves 3 and 4. The mixing time is 20 min, after which valve 5 opens to begin evacuating air. The heating step can begin only if the pressure $p$ in the reactor is lower than the prescribed value $p_1$. A pressure indicator with an alarm contact or pressure switch may be applied. Heating begins with closing of vent valve 7 and switching on the temperature controller with valve 8. There are several other ways to do this, related to the type of control. An adjustable rate of temperature rise is provided. On reaching the reaction temperature, catalyst *K* has to be added through valve 9. In the case of an endothermic reaction, heating is required to control the temperature.

After the preset elapsed time, the heating is shut off and cooling begins. If two consecutive reactions are possible the end of the cycle may need inhibitor injection, an alternative not shown here. If the reaction is completed and the product cooled, the pressure has to be restored by closing valve 5 and opening valve 4. Pressure will reach the atmospheric value $p = p_a$ and the discharge valve 6 can be opened. The last step is usually cleaning of the reactor. A programmable logic controller (PLC) or microcomputer may control the whole process. Logic outputs act as command instructions to open and close valves and start and stop pumps and agitators. The actual cycle status is displayed on the operator console or panel.

Charging of solids or pastes requires weight-feeders. In semi-batch reactors one of the reactants is fed continuously until the other reactant is consumed. The feed is manipulated through temperature control. An interlock must be arranged to prevent feeding before the temperature reaches its prescribed value, to prevent accumulation of a reacting mixture which could generate reaction heat in excess of the capabilities of the cooling system. At the completion of the reaction the temperature controller senses a lower value than prescribed and tries to add more reactant, an obviously incorrect action which has to be prevented.

### 7.4.3 COMPUTER CONTROL OF BATCH PROCESSES

Plants for batch process operations can be arranged as multiproduct or multipurpose plants. To operate both types the operating personnel have to supervise the sequence of operations closely, but special complex programs are required to optimise plant performance. Construction of a production plan is important for effective use of equipment and for scheduled production. Computers have proved to be invaluable aids in the operation of these plants [7.14], [7.15].

Computer control of batch reactors has been applied in Hüls (Germany) for polymerisation plants since 1967. The first systems were more expensive than the highly developed systems of the 1980s, although they proved economic in replacing the very complicated relay and transistor logic systems required earlier [8.1]. The introduction to the AIChE 1976 Workshop on Computer Control of Batch Processes says, inter alia "Batch processes have traditionally been the most difficult to manage from a production standpoint... Being sequential in nature, batch processes present unique requirements for computer control systems."

The early systems applied centralised DDC control with dual processors. Later hierarchical control with a PLC on the lower level was introduced. The advent of microprocessors resulted in the increasing application of microcomputer control and distributed digital control of batch processes. Most large instrument manufacturers developed their batch control systems (e.g. Honeywell's Batch Process Control or Fisher Control's Provox) and special programming languages (e.g. SOPL = Sequence Oriented Procedural Language, or STEP from Siemens). The batch control systems were initially stand-alone systems, but recently all large digital control system manufacturers have linked them to their standard distributed control system.

Software is an important part of the computer control system of a batch process. Special batch process oriented program packages have been developed and are commercially available. Several programs were developed by user companies, e.g. ALBERT (Automatic Logger and Batch Executive for Reactor Timing) by Union Carbide's experts, or AUTRAN (Automatic Utility Translator) by Merck in cooperation with Control Data. Other programs are produced by universities, research institutes, e.g. BATCHMAN in Zürich at the University ETH.

The large European chemical companies had problems with the increasing number of incompatible batch control systems and software, therefore, with the aid of the NAMUR (Normen-Arbeitsgemeinschaft Mess- und Regeltechnik), defined guidelines for batch automation systems. The guidelines of the NAMUR committee can be summarised as follows:

— The software should have a hierarchical, modular structure, which duplicates the structure of the process equipment.
— Standardised process control modules should exist at each level of the hierarchical structure.
— Program building should be performed by configuration and not by programming.
— On-line modifications should be facilitated.
— Predefined, system oriented and supported displays and reports should be produced to make the automation system easy to use.

The system suppliers are encouraged to conform their system to these requirements. Since the end of the 1980ies most instrument and control system manufacturers have their own modular batch automation system following the NAMUR Grundoperationen (Unit or Basic operations) concept. The software modules are parts of a recipe which can be easily configured without programming knowledge [7.16].

In multiproduct plants a number of products are manufactured over a period of time, but at a given time only one product is in process of manufacture. In a multipurpose plant, the equipment is used for the simultaneous manufacture of a set of products. The sequence of tasks for each product may be different. Since a number of products may be manufactured at one time a particular product could follow different routes through the plant at different times [7.1], [7.5], [7.6]. Optimal operation of these plants is unlikely without the aid of computers. A production scheduling program, 'BATCHMAN' has been developed to calculate the production plan for batch processes [7.10]. The algorithm is shown in Fig. 7.9. It is not only scheduling programs that are available; a computer program for the rapid modification of the schedule in the case of emergency has been developed under the acronym POMA (Projected Operation Modification Algorithm) by Imperial College, London [7.9]. The last group of batch process control programs comprises the expert systems.

The capital cost of batch reactor automation is relatively high in the case of numerous small units. Lots of sensors, contact devices and remotely operated final control elements are required. Although most of the valves have simple on–off duty, tight closing, fully open and fully closed contacts are required. In several cases a doubling of the valves is necessary. For large reactors the relative cost of automation is not really significant compared with the benefits gained through its application.

## 7.5 INSTRUMENTATION OF OTHER REACTOR TYPES

The technical literature most frequently presents the CSTR but in the chemical, pharmaceutical and petrochemical industries several other reactor types are installed and operated, and consequently they must be instrumented. Most of these reactors are specific to the chemical reaction, a general scheme to suit all types is not to be found.

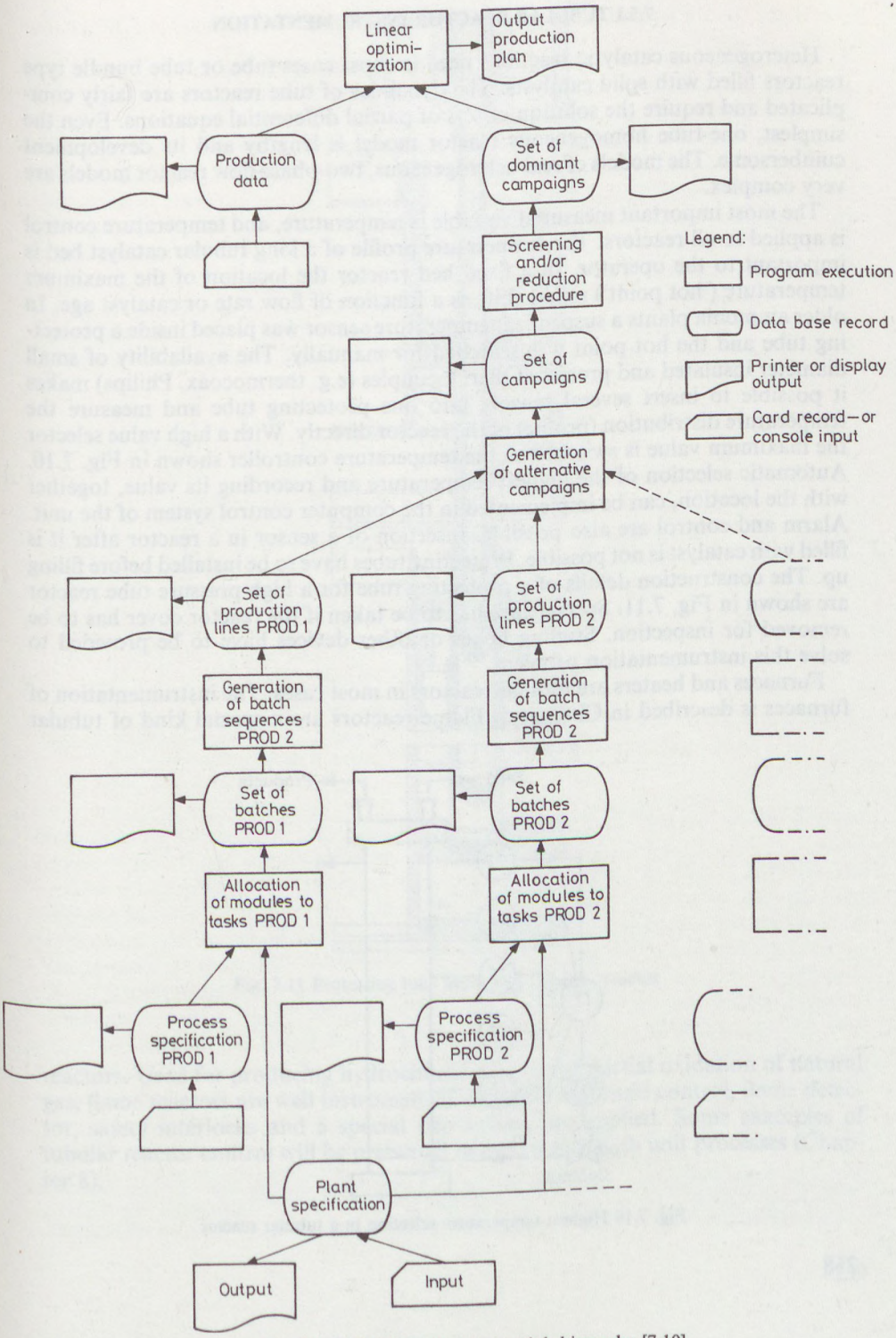


Fig. 7.9 BATCHMAN program job hierarchy [7.10]

### 7.5.1 TUBULAR REACTOR INSTRUMENTATION

Heterogeneous catalytic reactions need in most cases tube or tube bundle type reactors filled with solid catalysts. The dynamics of tube reactors are fairly complicated and require the solution of sets of partial differential equations. Even the simplest, one-tube homogeneous reactor model is lengthy and its development cumbersome. The models of real heterogeneous, two-phase flow reactor models are very complex.

The most important measured variable is temperature, and temperature control is applied to all reactors. The temperature profile of a long tubular catalyst bed is important to the operator. In a fixed bed reactor the location of the maximum temperature ('hot point') might shift as a function of flow rate or catalyst age. In older ammonia plants a suspended temperature sensor was placed inside a protecting tube and the hot point was searched for manually. The availability of small diameter insulated and protected thermocouples (e.g. thermocoax, Philips) makes it possible to insert several sensors into one protecting tube and measure the temperature distribution (profile) of the reactor directly. With a high value selector the maximum value is switched to the temperature controller shown in Fig. 7.10. Automatic selection of the highest temperature and recording its value, together with the location, can be implemented in the computer control system of the unit. Alarm and control are also possible. Insertion of a sensor in a reactor after it is filled with catalyst is not possible. Protecting tubes have to be installed before filling up. The construction details of a protecting tube for a high pressure tube reactor are shown in Fig. 7.11. Special care has to be taken if the reactor cover has to be removed for inspection. Stuffing boxes or other devices have to be provided to solve this instrumentation problem.

Furnaces and heaters are tubular reactors in most cases. The instrumentation of furnaces is described in Chapter 5. Flame reactors are a special kind of tubular

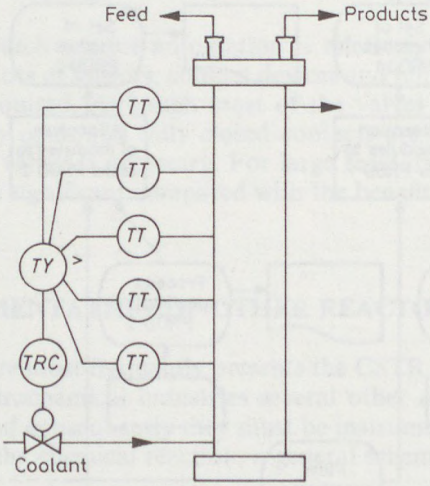


Fig. 7.10 Highest temperature selection in a tubular reactor

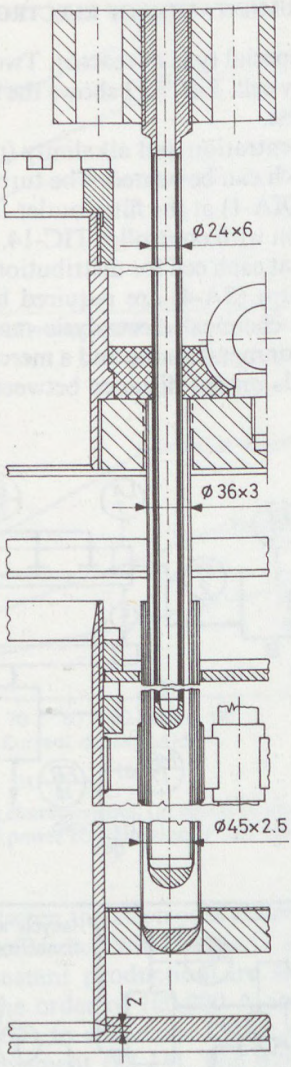


Fig. 7.11 Protecting tube for a high pressure reactor

reactors. Used for producing hydrochloric acid or for partial oxidation of natural gas, flame reactors are well instrumented. Pressure and ratio control, flame detector, safety interlocks and a special trip system are applied. Some examples of tubular reactor control will be presented in connection with unit processes (Chapter 8).

### 7.5.2 INSTRUMENTATION OF ELECTROLYTIC CELLS

The electrolytic cell is a special type of reactor. Two types are generally used, the diaphragm and the mercury cell. Fig. 7.12 shows the instrumentation of a mercury cell type chlor-alkali process.

Brine of prescribed concentration and alkalinity (pH value) flows through filter *A* into the feed tank *B*, which can be heated. The turbidity of the brine is measured by an optical instrument (QIA-1) at the filter outlet. The temperature is controlled by steam valve manipulation with controller TIC-14. The feed flow is measured by variable area meters (FI-2) at each cell for distribution control. A liquid level alarm (LA-3) and circulation alarm (SA-4) are required because these are essential to stable cell operation. The chemical electrolysis reaction depends on the direct current between a graphite or metal anode and a mercury cathode. The cell voltage, usually a few volts, depends on the distance between the electrodes. The voltage

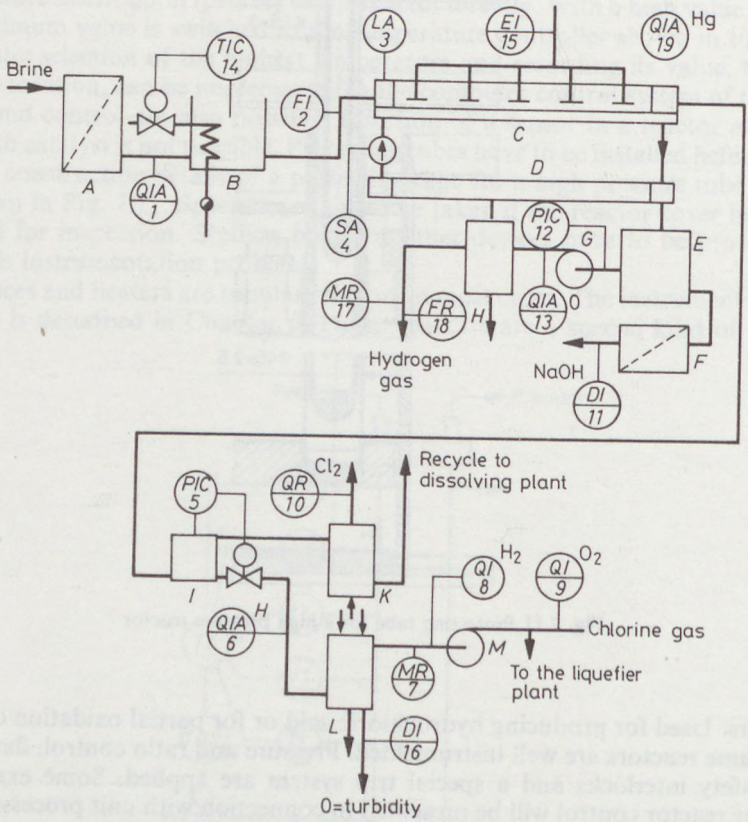


Fig. 7.12 Instrumentation of an electrolysis plant. *A* brine filter; *B* brine tank; *C* electrolytic cell; *D* decomposer; *E* separator for $H_2$ gas; *F* filter; *G* hydrogen blower; *H* gas purifier and dryer; *I* chlorine gas separator; *K* weak brine solution dechlorinator; *L* chlorine cooler and dryer; *M* compressor

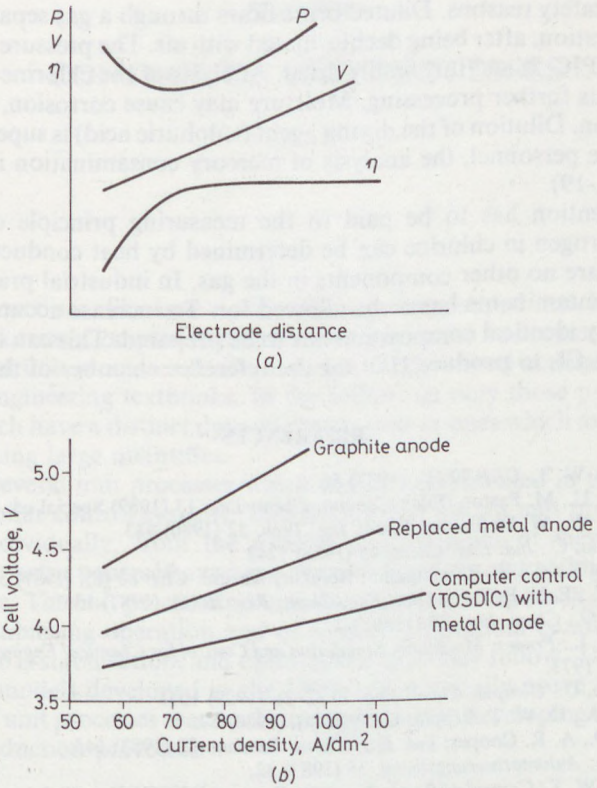


Fig. 7.13 Electrolytic cell operating characteristics. (*a*) effects of electrode distance; (*b*) current density related to cell voltage. *P* power consumption; *V* cell voltage; $\eta$ current efficiency

decreases as the distance between the electrodes decreases, and with it the decomposing current and current efficiency will change [7.3].

The relationships for constant production are shown in Fig. 7.13*a*. As the current in large cells is of the order of 100,000 A and energy costs are high, the operating cost is very sensitive to efficiency. Direct current measurement in this range requires a special instrument (EI-15). The frequency of anode damage by short circuit increases with decreasing electrode separation. The production cost achieves a minimum if the cell is operated with an optimum anode distance. Current density is a linear function of cell voltage which affects the power consumption, as shown in Fig. 7.13*b*. A computer control system for monitoring and control of electrolytic cells has been developed by Topacs Inc. (Japan). The system controls cell voltage by manipulating anode frame lifting. The current density is controlled, and anode protection and an alarm system are provided. Management reports are produced and a cell supervision display is included.

The density of caustic soda is measured (DI-11), hydrogen gas pressure is controlled (PIC-12), its oxygen content is supervised (QIA-13) and an alarm is

provided for safety reasons. Diluted brine flows through a gas separator and back to feed preparation, after being dechlorinated with air. The pressure of chlorine gas is controlled (PIC-5) and it is finally dried. Analysis of the chlorine gas is required according to its further processing. Moisture may cause corrosion, hydrogen may cause explosion. Dilution of the drying agent (sulphuric acid) is supervised (DI-16). To protect the personnel, the analysis of mercury contamination in air is recommended (QIA-19).

Special attention has to be paid to the measuring principle chosen for gas analysis. Hydrogen in chlorine can be determined by heat conductivity measurement if there are no other components in the gas. In industrial practice some 2% of different contaminants has to be allowed for. To increase accuracy a reference gas with nearly identical composition has to be prepared. This can be produced by burning $H_2$ in $Cl_2$ to produce HCl for the reference chamber of the gas analyser.

## REFERENCES


[7.1] Armstrong, W. S.: *CEP* 79 (1), (1983) 56.
[7.2] Georgakis, U., M. Paston (Eds): *Comput. Chem. Eng.* 13 (1989) Special ed. 1/2.
[7.3] Hartmann, W., W. Hoffmann: *Chem. Ing. Tech.* 52 (1980) 433.
[7.4] Heerden, van C.: *Ind. Eng. Chem.* 45 (1953) 1242.
[7.5] Hong Ming Ku, Dilip, Rajagupalan, Iftekkar, Karimi: *CEP* 83 (8), (1987) 35.
[7.6] Kuriyan, K., E. V. Reklaitis: *Ind. Eng. Chem. Res.* 26 (6), (1987) 1551.
[7.7] Lipták, B. G.: *Chem. Eng.* 95 (1989) 69.
[7.8] Luyben, W. L.: *Process Modelling, Simulation and Control for Chemical Engineers.* McGraw-Hill, New York 1973.
[7.9] Machinetto, C.: *Comput. Chem. Eng.* 13 (1–2), (1989) 105.
[7.10] Manderli, A., D. W. T. Rippin: *CEP* 76 (4), (1980) 37.
[7.11] Mukesh, D., A. R. Cooper: *Ind. Eng. Chem. Fundam.* 22 (1983) 145.
[7.12] Noisser, R.: *Automatisierungstechn.* 35 (1987) 32.
[7.13] Rippin, D. W. T.: *Control of Batch Processes.* Preprint DYCORD+ 89. Maastricht 1989. IFAC.
[7.14] Rosenoff, H., A. Ghosh: *Batch Process Automation. Theory and Practice.* Van Nostrand Reinhold, New York 1988.
[7.15] Shaw, W. T.: *Computer Control of Batch Processes.* EMC Controls Inc. Cockeysville 1982.
[7.16] Uhlig, R. S.: *Automatisierungstech. Prax.* 29 (1987) 17.
[7.17] Wu, W. T., J. Cheng: *Chem. Eng. Sci.* 41 (10), (1986) 2457.
[7.18] Yoshitaka Fuji, Masatoshi Nakakara: *A. Adams. Intech* 38. (Jan. 1991) 41.

CHAPTER 8

# CONTROL OF UNIT PROCESSES

Chemical reactions, like unit operations, can be grouped into logically identifiable unit processes. Complex chemical technologies can be broken down into unit operations and unit processes. Unit processes are described in detail and analysed in chemical engineering textbooks. In the following, only those processes will be discussed which have a distinct dynamic behaviour or ones which are used in many plants producing large quantities.

There are several unit processes which can be implemented in the same equipment with similar control systems. This means that not all unit processes have to be treated individually, from the process control point of view. The general principles of reactor control have been discussed earlier, and will be considered as already known. The unit process and unit operation building block approach offers a means of stabilising operation and of achieving optimum conditions. The primary objective is stabilisation, and optimum control may follow. The total process optimisation models developed in the 1960s did not really prove successful. The integration of unit processes seems a better approach to developing control systems for entire production processes.

## 8.1 CONTROL OF OXIDATION PROCESSES

Combustion forms a well-known group of oxidising processes. The difference between the control objectives of a firing control system and an oxidising reactor control system lies in the fact that the reactor has to produce a specified product in a prescribed quantity, whereas the firing depends on the heat demand of the equipment. Quality control of a combustion process is important, as has been demonstrated above, but is a secondary objective; temperature, pressure or other process variables come first.

Oxidation reactions are used in the heavy chemical industries for production of sulphuric acid ($SO_2$ to $SO_3$), phthalic anhydride, nitric acid and formaldehyde, as shown in Fig. 8.1. The process flowsheet here has been simplified and only the principal instruments and controllers are illustrated. The diagram seems complicated, but with the aid of the unit control schemes, used as building blocks, the development of the control scheme is logical and not very difficult.

The first group of instruments ensures stable feed of the raw materials and controls their ratio. Methanol is diluted with water by ratio control to produce the specified feed composition. As the methanol concentration fluctuates, composition control is recommended with a density controller as master controller. Air flow

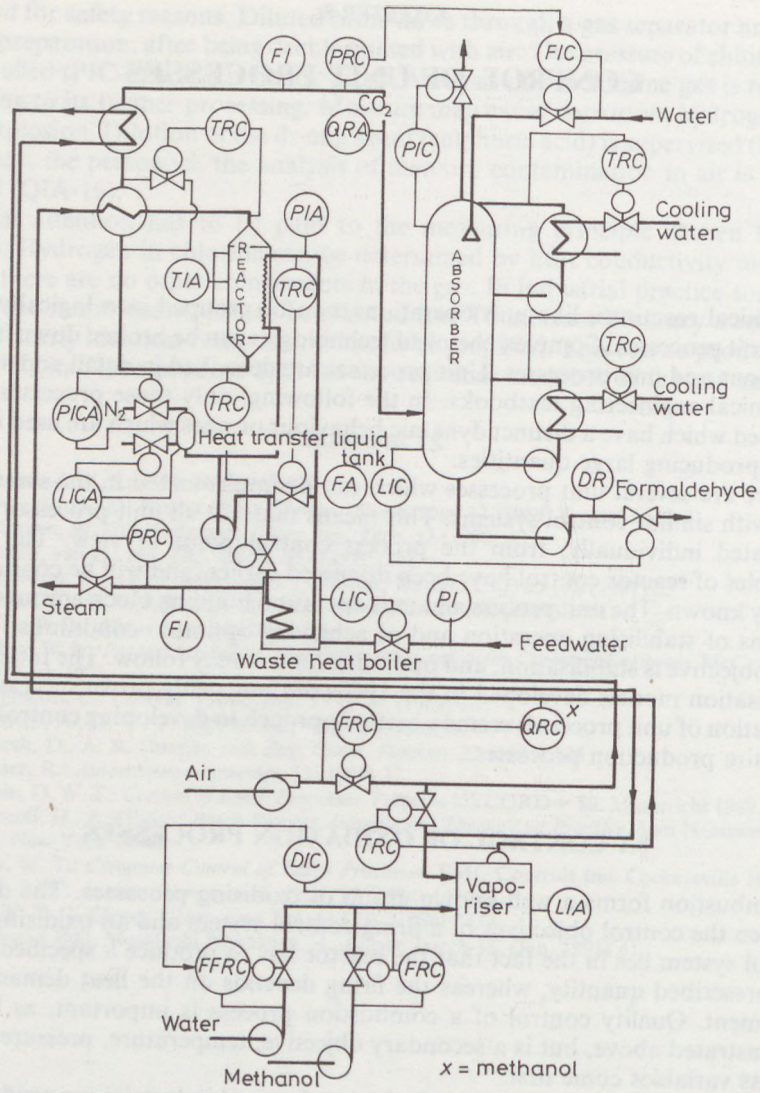


Fig. 8.1 Formaldehyde process control flowsheet

control is generally equivalent to oxygen feed control because air composition is constant, if its temperature, humidity and pressure are stable. Reactor feed gas concentration control is achieved by liquid feed manipulation before the evaporator. With the aid of cause and effect analysis two control systems can be designed. One system controls the liquid level in the evaporator by manipulating heat input. The other system applies air temperature control and air flow control in series with gas concentration control, as shown in the diagram.

The second group of instruments is around the reactor. Feed gas temperature is controlled for technological reasons. The feed is preheated by the reactor outlet gas for energy conservation. Because neither feed nor outlet stream can be manipulated, bypass control has to be applied. The reactor temperature is controlled through a liquid cooling system transferring reaction heat to a waste heat boiler. The heat transfer liquid is circulated, its pressure, level and temperature are controlled.

The waste heat boiler control system is designed according to boiler codes with the objective of conserving heat. Supervision of the reaction uses $CO_2$ analysis. In the case of over-oxidation the $CO_2$ content of the outlet gas increases. Direct measurement of product concentration is not readily available. The last group of instruments is grouped around the absorber. Final product concentration is monitored by density measurement. Some oxidation processes, such as the partial oxidation of methane, are highly dangerous, and their control systems have to incorporate special safety interlocks and redundant instrumentation.

## 8.2 HYDROGENATION PROCESS CONTROL

A classical example of high pressure hydrogenation process control is shown in Fig. 8.2, which illustrates a tar hydrogenating process. Liquid phase hydrogenation of tars takes place at 350 and 700 bar (35 and 70 MPa) pressure and 400—500°C temperature. This special process requires special instruments.

It should be mentioned that the high pressure instruments have been developed by the chemical works to meet their own demands and then handed over to the instrument manufacturers. This also applies to the special analysers. Infrared and oxygen gas analysers have been developed by large German chemical works, a viscosity controller by Shell, a special photometer by DuPont, etc. All these instruments are now available from instrument manufacturers.

Liquid feed is pumped by reciprocating pump *1* through heat exchanger *2* and furnace *3* into the reactor *4*. Buffer and equaliser vessel *5* serves for stabilising the feed stream and is under nitrogen gas pressure. The pressure difference controller PDIC-101 recirculates surplus tar to the feed tank (not shown). The furnace control system is conventional and is indicated as one controller, UIC-110. The reactor temperature is controlled by direct gas injection with TRC-105. Temperature measurement is essential, and requires high accuracy. Special compensation methods had to be developed for this purpose.

The reaction mixture flows into the hot separator *6* where nonvolatile liquid and slurry are separated from gaseous products and recirculated by a special pump *11*. The separator level is controlled, and excess slurry is drained. The gaseous product is cooled in heat exchanger *2* and condensed in cooler *7*, and then flows into the cold separator *8*. The separator level is controlled by LIC-103 which releases the product. The gas phase flows from the separator through absorber *9*, where the recirculating gas is purified. Recirculating compressor *10* feeds the gas back to the inlet, where fresh hydrogen gas is mixed with the recirculated gas. The pressure loss of the whole system is controlled by the controller PDIC-104, operating with a high pressure difference and absolute pressure. The level controllers are heavy duty

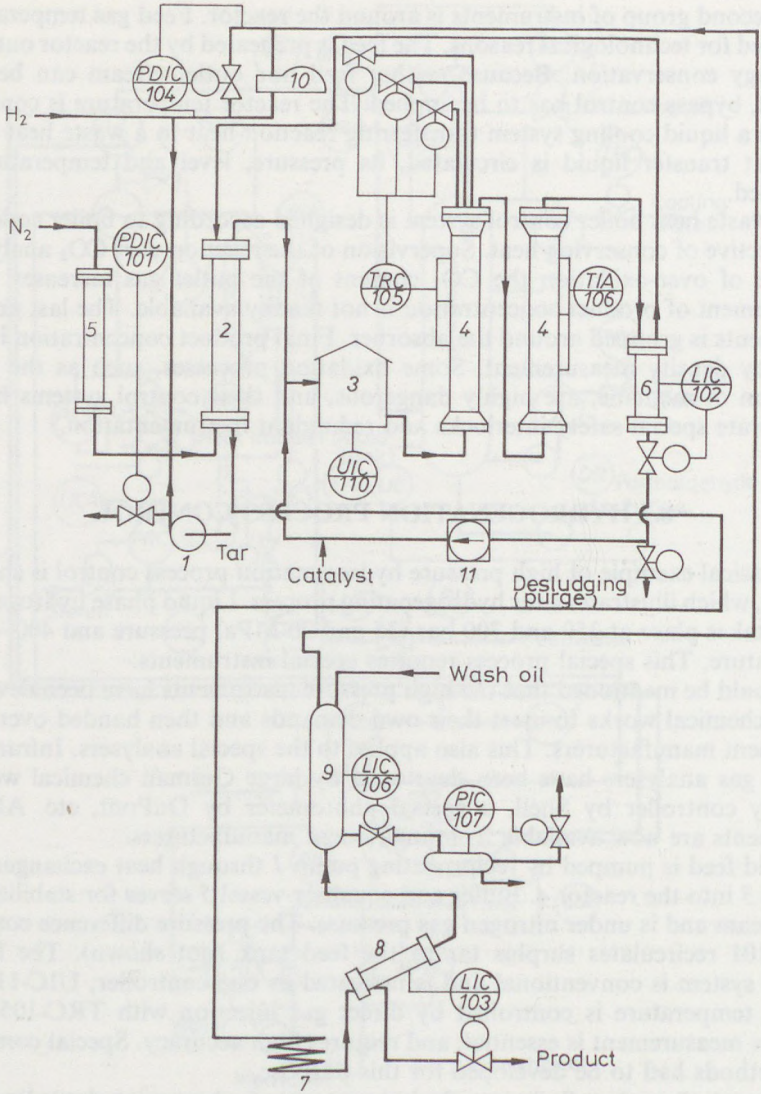


Fig. 8.2 Hydrogenation process control flowsheet

instruments for explosive environments, high pressure and erosive slurry. Tuning of the controllers should generate slight oscillations, to prevent clogging. Similar principles are applied to high pressure ammonia synthesis plant control systems, but gas phase reactants pose fewer problems than liquid and slurry.

Computer control of hydrogenation processes has been implemented in several plants. A predictive control system is described by Hobbs [8.6]. Control system objectives for the acetylene hydrogenation process have been defined as:

(*i*) control of the acetylene concentration in the reactor effluent at a value set by the process operator;
(*ii*) control of the difference in feed temperatures to the two beds at a value set by the process operator;
(*iii*) provision of safeguards against process runaway.

The process control system was implemented with a DDC computer. A process model predicts the average reactor feed temperature required to yield the desired concentration of acetylene in the reactor effluent. Three variables are used in the prediction: feed flow, CO content and acetylene content of the feed. An overriding feedback analyser controller continually updates the model to eliminate long term error in the outlet concentration.

The greatest benefit of the system lies in preventing process runaway and eliminating the necessity for venting the reactor in the case of compressor failure or other failures. Other benefits resulted from reduction of ethylene loss and increased catalyst life.

## 8.3 CONTROL OF POLYMERISATION

Polymerisation is the most important process in the plastic industry. PVC, polyethylene, butadiene and SBR are produced in large quantities in batch or continuous polymerisation plants. Several other polymers are produced in smaller quantities in batch reactors. The increasing number of reactors and the increasing size of autoclaves have motivated the growing number of investigations in this field. Dynamic behaviour, sequential control and computer control of polymerisation reactors are abundantly discussed in the technical literature [8.1], [8.2], [8.8], [8.14].

The main control objective is to produce a polymer with the desired molecular weight, but there is no exact control which measures and directly manipulates molecular weight or its distribution. The main problem of polymerisation reactor control is to maintain a stable temperature in the reactor vessel. The reactors present special control problems because there is often a tendency for polymer to build up in the equipment and because the reactions are normally exothermic. The temperature control loop thus involves poor, and variable heat transfer. Another problem with batch polymerisation lies in the startup procedure. Initially the reactor has to be heated, but on reaching the temperature where the reaction is initiated, cooling is required. It is desirable to arrive at the working temperature as rapidly as possible, but only a few degrees of overshoot can be allowed in order to prevent runaway. If more reaction heat is generated than can be removed by cooling, the reaction has to be stopped chemically, which is costly.

A control system for a vinyl chloride polymerisation batch reactor is shown in Fig. 8.3. Vinyl chloride monomer is charged into the reactor by volume or by weight. In the scheme shown a tank scale is applied, with automatic inlet-outlet valves. Other additives and water are charged through volumetric meters. Heating and cooling of the reactor wall is done by forced water circulation in the jacket to achieve a high heat transfer coefficient. In the heating period, steam is injected into

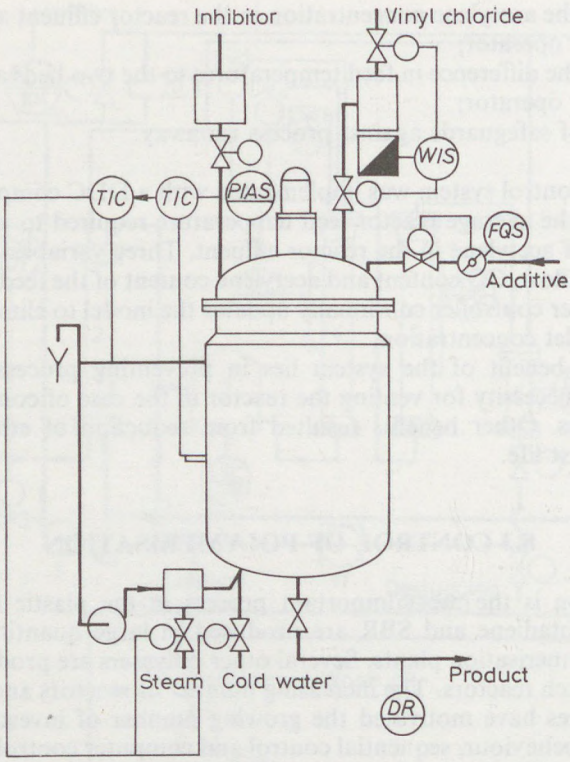


Fig. 8.3 Instrumentation of a polymerisation reactor

the circulating water system. The time lag of the process and the dead time of the measurements justify the application of a cascade control system. The location of the sensor for the slave controller is important for the stability of the system. The outlet temperature responds faster, according to the time constant of the heat transfer medium system. If temperature changes in the chilled water temperature are expected, the inlet temperature will be important. Split range control is required because heating and cooling is manipulated by two separate valves.

For fast reaction rates a pressure compensated temperature measurement can be used for the master controller. Advanced control algorithms have been developed and used for polymerisation temperature control which can be implemented on computer control systems. A delay time forecast circuit method has been described [8.11], and heat balance control and optimal control have been developed. The use of advanced control methods and process optimisation are justified because the nonlinear, extremely sensitive and generally dangerous reactions take place in large units which represent economically important charges of high value materials.

Evaporative cooling is widely used in polymerisation reactors where high viscosity or polymer buildup reduce heat transfer. A temperature or heat input calculating controller may be installed on the condenser. Pressure measurement and alarms

on the reactor vessel are necessary. A pressurised tank for the inhibitor is provided and in the event of runaway danger, inhibitor is injected into the reactor. Measurement of degree of polymerisation would be ideally suited for reaction control, but only a few methods have been applied with success. The measurement of the speed of propagation of an ultrasonic wave may be used in some processes, the measurement of effluent density is used in several plants.

In large plastics manufacturing plants several reactors are working parallel or in series according to the technology. Batteries of reactors are controlled by computers in modern plants. Both centralised and decentralised control configurations are used. Characteristics of the polimerisation plants are: multiple reactors, multiple product grades, shared plant equipment and in several plants combination of continuous and batch control is required. Surveys of computer applications in the polymerisation industry have been published [8.1], [8.14].

## 8.4 CONTROL OF RUBBER CURING

In tyre manufacturing processes, vulcanisation of the preshaped rubber product is one of the basic unit processes. During heating under pressure the inner structure of the rubber mixture is changed and the final molecular binding develops. Control of the rubber curing process is therefore essential in the rubber industry.

Fig. 8.4 shows a simplified scheme of a rubber tyre vulcanising press control system. The tyre is built up layer by layer on an assembly equipment from prefabricated beads, treads, liners and ply material to form a 'green' tyre. A rubber hose is inserted and the green tyre is placed into the curing press, which contains

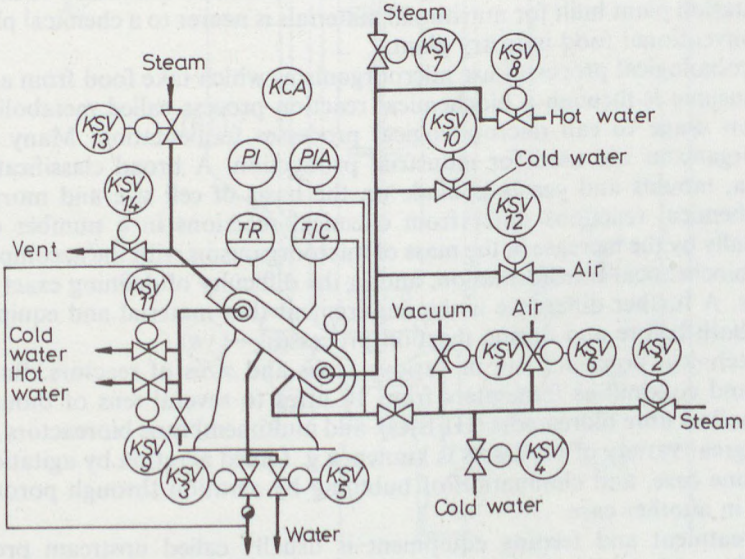


Fig. 8.4 Tyre vulcaniser control scheme

steel dies to form various tread designs. The operator starts the process by pressing the start button and the press automatically closes. The time cycle control begins with venting and heating up. Steam, hot water and compressed air are switched on the inner hose and on the heating jacket in a prescribed time cycle. The control system ensures the correct coupling of inlet and outlet valves for each medium to prevent prohibited mixing of the different fluids. A temperature controller serves for accurate temperature curing of the tyre. Vacuum venting of the jacket is provided for better heat transfer during steam heating. Press sealing is maintained under steam pressure. Pressure switches are installed on the inner and outer heating spaces to prevent opening of the press under pressure. This is a safety measure because hot steam is dangerous to the operator and early opening of the press may damage the tyre. At the end of the process the press is opened and the tyre ejected from the die. When opening may be dangerous to the operator an optical barrier is installed which initiates interlocking if an operator is in the forbidden zone.

A time schedule or state chart has to be prepared for the process in order to set up the control system. Existing plants operate mostly with mechanical program controllers. For modern plants, PLCs are well suited to the time cycle control of curing presses. Groups of presses can be controlled and supervised by one PLC. Centralised supervision has the advantage of easy production planning coupled with process control.

## 8.5 CONTROL OF BIOTECHNOLOGICAL PROCESSES

Biochemical engineering is playing an increasing role in the chemical industry, because microbiological processes are widely used in the production of medicinal compounds, enzymes, proteins, organic acids and other materials. A large scale fermentation plant built for nutritional materials is nearer to a chemical plant than to a conventional food industry plant.

Microbiological processes use microorganisms which take food from a nutrient and consume it through a biochemical reaction process called metabolism. It is common usage to call microbiological processes fermentation. Many types of microorganisms are used for industrial production. A broad classification into bacteria, moulds and yeasts is made on the basis of cell size and morphology.

Biochemical reactions differ from chemical reactions in a number of ways, principally by the increase in the mass of microorganisms with the accomplishment of the biochemical transformation, and in the difficulty of defining exact reaction kinetics. A further difference is the requirement that material and equipment be sterile both before and during reaction processes.

Biotechnical processes run in various types and sizes of reactors. Batch, fed-batch and continuous fermenters from 10 litres to several tens of thousands of litres, hollow fibre bioreactors (HFBRs), and multimembrane bioreactors are all in use. A great variety of processes is known, e.g. forced aeration by agitation or air lift in one case, and elimination of bubbling by aeration through porous membranes in another case.

Pretreatment and feeding equipment is usually called upstream processing; separation, refining, drying, etc. of the product is called downstream processing.

Downstream processing depends to a great extent on the fermentation technology, and the required product quality. In a protein production plant, the food grade yeast is produced in a fermenter operating with high cell density broth, which is spray dried without intermediate dewatering.

### 8.5.1 INSTRUMENTATION FOR FERMENTATION PROCESS CONTROL

Fermentation is the central process of modern biotechnology on the industrial scale. Fermentation processes may be characterised by the biological rate equations (for films and flocs) and growth curves (see Fig. 8.8). The biological rate coefficients in the equations are generally affected by pH value, temperature,

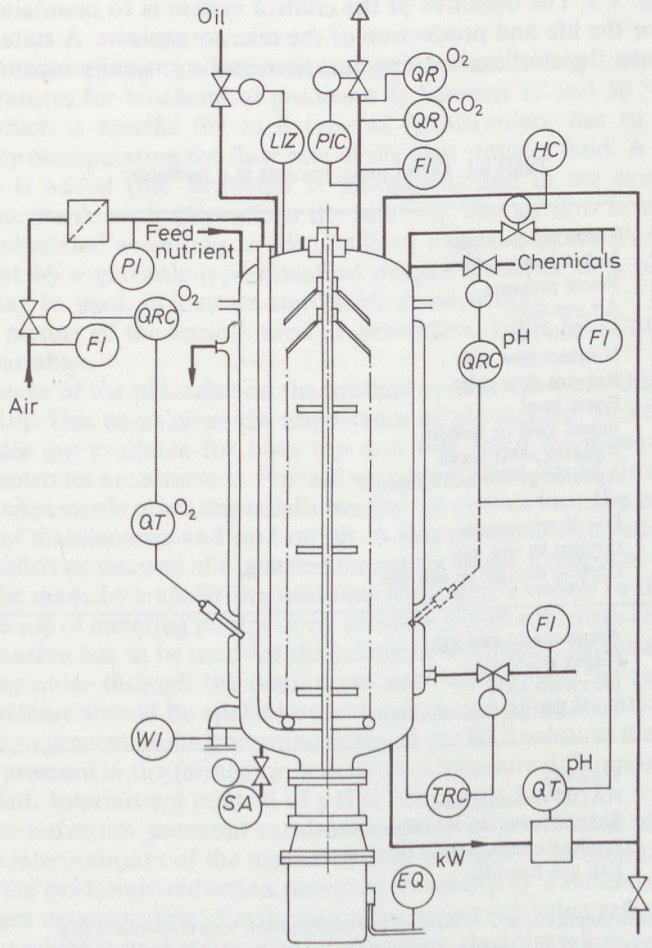


Fig. 8.5 Batch fermentor instrumentation scheme

oxygen content and concentration of the solution. Two types of fermentation are used, aerobic and anaerobic fermentations, having regard to the aeration of the reactor.

Batch fermentations account for the bulk of all industrial fermentations performed, but the advantages of fed-batch (semi-batch) processing are increasing the application of this technology. It has to be mentioned that theoretically no real batch fermenters are in use because the oxygen (air) is fed continuously. In fed-batch fermentation the feed rate of the liquid phase (nutrient) may be changed during the process but no product is removed until the end. For continuous fermentation the upstream (e.g. continuous media) sterilisation, and thus the control system has to be designed for the whole process.

The control scheme of a batch fermentor is presented in Fig. 8.5. The large industrial fermentors usually have bottom mounted agitator systems such as is shown in Fig. 8.5. The objective of the control system is to maintain favourable conditions for the life and production of the microorganisms. A suitable nutrient is charged into the sterilised equipment. Sterilisation usually means heating to

Table 8.1. Direct measurements in a fermenter

| | |
|---|---|
| *1* | Vessel temperature<br>Jacket temperatures<br>Vessel pressure<br>Air pressure<br>Air flow rate<br>Nutrient flow rate<br>Reagent flow rate<br>Foam level<br>Vessel level or weight<br>Agitator shaft speed<br>Agitator power consumption<br>pH<br>Dissolved oxygen<br>Oxygen in exit gas<br>Carbon dioxide in exit gas |
| *2* | Ammonia in exit gas<br>Redox potential<br>Dissolved $CO_2$<br>Turbidity (optical density) |
| *3* | Viscosity<br>NADH (fluorescence)<br>Specific ions (ion selective electrode)<br>Product concentration (biosensor)<br>Exit gas humidity |

*1* Basic instrumentation; *2* Advanced instrumentation with constraints (e.g. non-sterilisable in situ, expensive, frequent calibration); *3* Instruments for research and pilot plants

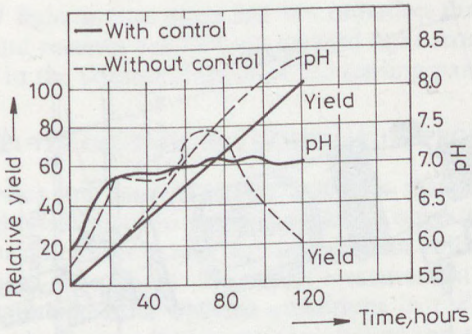


Fig. 8.6 Yield-pH relationship in fermentation

120 °C and maintaining this temperature for a specified time interval. Favourable temperatures for biochemical processes lie between 25 and 30 °C. This temperature, which is specific for each type of fermentation, has to be precisely controlled by manipulating the flow rate of the heat transfer fluid. A microorganism culture is added (the fermenter is inoculated) and in the case of aerobic fermentation, sterile air is blown into the solution. The air flow is measured and may be manipulated according to the dissolved oxygen content. Partial pressure measurement by a galvanic type dissolved oxygen electrode or a polarographic electrode may be used, in a steam sterilisable construction.

To get a picture of the sensors used in fermenters, Table 8.1 contains a list of measured variables.

The influence of the pH value on the product yield is shown in the diagrams of Fig. 8.6 [8.10]. This emphasises the importance of pH control. In situ sterilisable pH electrodes are available for both top and side entry mountings. Externally mounted electrodes are shown in Fig. 8.5 with permanent liquid circulation. This method requires sterile operating conditions for the outside loop. Its advantage lies in the ease of maintenance and calibration. A side mounted electrode is shown in Fig. 8.7 installed on the wall of a jacketed fermenter vessel. Control of alkali or acid inflow can be made by transferring solutions from sterile vessels to the fermenter, either by the use of metering pumps or by pressure transfer through control valves.

Special caution has to be used for the reference electrodes, because the nutrient solution may enter through the diaphragm and contaminate the saturated KCl solution. Pressure should be applied over the electrode filling to maintain a small outflow and to prevent boiling or evaporating of the KCl solution during sterilisation. If the pressure in the fermentor is variable, a pressure difference controller is recommended. Intermittent control of pH is sometimes used.

Oxidation–reduction potential can be measured by sterilisable platinum electrodes. The interpretation of the measured data is difficult, because under aerobic conditions the oxidation–reduction potential is essentially a measurement of dissolved oxygen concentration. Furthermore the measured value refers to the bulk environment which is probably quite different from the intracellular environment. Level control is performed by load cells and is combined with foam control.

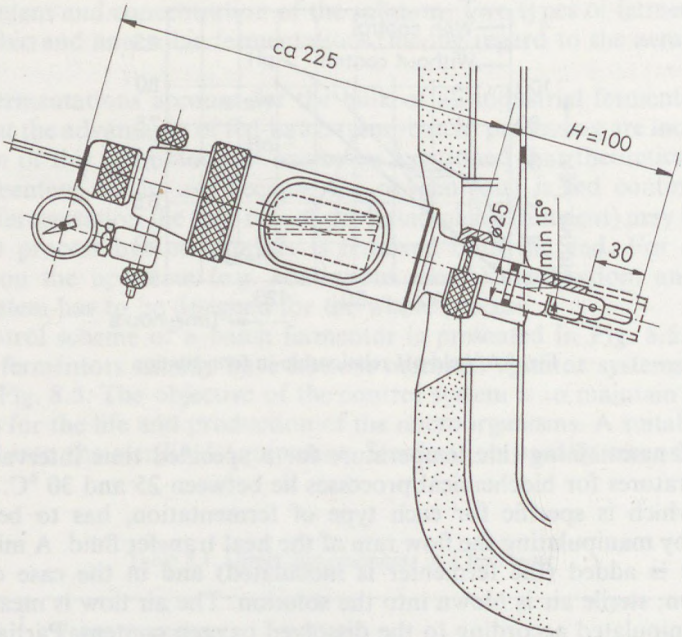


Fig. 8.7 Internally mounted electrode (Ingold)

Biomass solutions tend to foam, therefore mechanical foam breakers are installed on the agitators of fermenters. For safety reasons, chemical foam control has to be implemented. Electric foam sensors initiate the injection of a sterilised defoaming agent. Exhaust gas analysis is applied to monitor the metabolism. Oxygen, $CO_2$ and in some cases $NH_3$ analysers are installed. Mass spectrometry can be applied to these measurements and to the analysis of fermentation media by means of a special sampling system. Determination of dissolved gases such as $O_2$, $CO_2$, $CH_4$ and also of volatile compounds e.g. methanol, ethanol butanol and acetone is possible. Simple, cheap mass spectrometers can be used, such as quadrupol spectrometers.

In some cases a turbidity measuring instrument is used for cell concentration measurement. The turbidity sensor is a photoelectric measuring system. A pump circulates the cell suspension in a closed loop through an optical sensing device. With continuous culture fermenters the turbidity controller maintains the substrate dilution rate and the harvest rate, which will equal the rate of dilution. When the population density begins to deviate from the reference value, the controller actuates the nutrient feed pump. The harvest pump is actuated by a level controller [8.4].

Many of the sensors which directly register biomass or substrate concentrations are not robust enough or are too expensive for routine industrial control application. Research and development efforts may alter this situation, as in the case of fluorescence analysis of intracellular NADH (nicotinamide adenine dinucleotide).

The instrument's UV light source emits 360 nm radiation through a fibre optic cable to the broth, and receives the 460 nm emitted light from NADH through another optical fibre in the photomultiplier of the sensing part.

### 8.5.2 COMPUTER CONTROL OF FERMENTATION PROCESSES

Biochemical processes are generally more complex than chemical processes because they are highly sensitive to small changes in operating conditions, the biocatalyst enzymes usually have a very narrow range of efficient operation, and they may be irreversibly deactivated. The direct measurement of the parameters important for the maintenance of optimal conditions in the bioreactor is only possible in part. The use of computers in process control and optimization makes it easy to calculate those process parameters which are not directly accessible by measurement.

A number of papers have been devoted to the design of computer controlled fermenters [8.7], [8.13]. The computer coupled system has the capability of displaying instantly such process parameters as biomass concentration, growth rate, oxygen uptake rate, carbon dioxide evolution rate, respiratory quotient and substrate uptake rate. The respiratory quotient (RQ) is the ratio of the carbon dioxide evolution rate (CER) and the oxygen uptake rate (OUR) as follows

$$RQ = \frac{CER}{OUR}. \tag{8–1}$$

A list of some important parameters which have to be calculated from measured data is presented in Table 8.2.

Computer control can apply advanced control algorithms, but this requires a mathematical model of the controlled process. Several model groups have been developed for biochemical processes and the results of the development efforts are regularly presented at IFAC symposia [8.9].

Table 8.2. Selected quantities which are commonly calculated from measured variables

| |
|---|
| Oxygen uptake rate (OUR) |
| Carbon dioxide evolution rate (CER) |
| Respiration quotient (RQ) |
| Substrate utilisation rate (SUR) |
| Product evolution rate |
| By-product evolution rate |
| Yield |
| Biomass concentration |
| Biomass growth rate |
| Apparent viscosity (in non-Newtonian fluid) |
| Heat evolution rate |
| Heat and component balances |
| Ammonia transfer rate (ATR) |

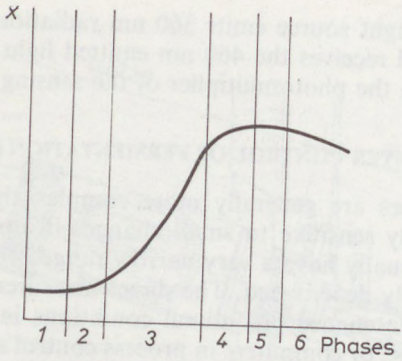


Fig. 8.8 Characteristic curve of a batch fermentation process

The characteristic diagram of a batch fermentation process is shown in Fig. 8.8. On the time scale the zero point represents the inoculation. The first phase is the lag or dead time, the second is the accelerating phase in which biomass concentration starts to grow. In the exponential phase growth is very rapid and in the decline phase the limiting factors slow down the exponential growth. In the fifth phase a steady state (endogenous respiration) is reached and at the end of this phase the decay phase begins.

With computer control and additional off-line measurements optimisation of the fermentation process is a viable operation. The control objectives may vary. Some examples of control objectives are:

— constant dissolved $O_2$ concentration via aeration rate and agitation;
— constant RQ via substrate feed;
— optimum growth rate.

The optimising control of fed-batch cultures of yeast can have the following objectives:

— optimal cell growth, suppression of ethanol formation;
— maximum yield of biomass;
— time optimal substrate feed during start up and exponential growth.

Computer application has the following levels in fermentation process control:

— data acquisition;
— sequencing control;
— process automation;
— process optimisation.

*Data acquisition* includes data processing and data analysis. Process identification and data base management, calculation of estimated variables and process simulation are linked to this level. Special computer programs are available for this task, e.g. LADAC (Log, Analyse, Display And Control) from BioChem Technology Inc. (USA).

*Sequencing control* includes start up and shutdown, alarm signalling, instrument recalibration, safety measures. Feedback control remains autonomous, analogue.

*Process automation* means fully computerised control which can be supervisory (SPC), direct digital (DDC) either centralised or distributed (DCS) (see Chapter 10). The type of computer and its architecture depends on the application. If only one fermentor has to be controlled, a microcomputer is adequate. Dedicated microprocessor based fermenter control systems are available (e.g. Electrolux, Sweden). In large fermentation plants, where several fermenters and related upstream and downstream processes have to be controlled, powerful control systems are required.

Computer control makes it easy to maintain a process data base, which can be a cost effective way of documenting Good Manufacturing Practice (GMP) to satisfy the requirements of national and international administrative bodies (e.g. the FDA in the USA), when compounds for clinical application are being produced. The capital cost of sophisticated instrumentation and control is relatively high. In biotechnology the instrumentation cost is generally between 25 to 30% of the total investment. In highly instrumented pilot plants and laboratories, instrumentation can take a share of 50 to 60% of the total costs.

## 8.6 CONTROL OF COAL GASIFICATION PROCESSES

Gas generators are used to convert solid coal to fuel gas or synthesis gas. It is well known that fuel gas can be distributed, handled and burned more easily than coal, consequently gas burners are easier to control than any coal firing systems.

Feeding synthesis gas into reactors, even under high pressure, is well documented, along with the required purification, filtering and compressing equipment. On the other hand, the feed of solids into a high pressure reactor is a complicated and difficult task, not to mention the separation of non-reacted and harmful components from a solid mixture. The above technical considerations and other economic reasons have led to a rapid switch from coal to natural gas as the principal raw material of the chemical and petrochemical industries. The rapid increase of oil and gas prices has resulted in the revival of coal gasification processes. Although several new processes have been announced, real industrial experience exists only with a few, mostly old, processes. The main principles of process control can be demonstrated using the classical (Koller) gas generator, which is shown in Fig. 8.9. The gas generator has a vertical cylindrical body with a top vault and an opening for coal charging. The cylindrical part has a cooling jacket for steam generation (a waste heat boiler). Air or oxygen-enriched air is blown in at the bottom below a grate and generator gas leaves at the top. There are several distinct operating zones inside the generator. Above the grate is the slag zone, to protect the grate and preheat the input air.

The second zone is the burning zone, where glowing coal is burned to carbon dioxide according to the equation

$$C + O_2 = CO_2 + 406\,119 \text{ J}. \tag{8–2}$$

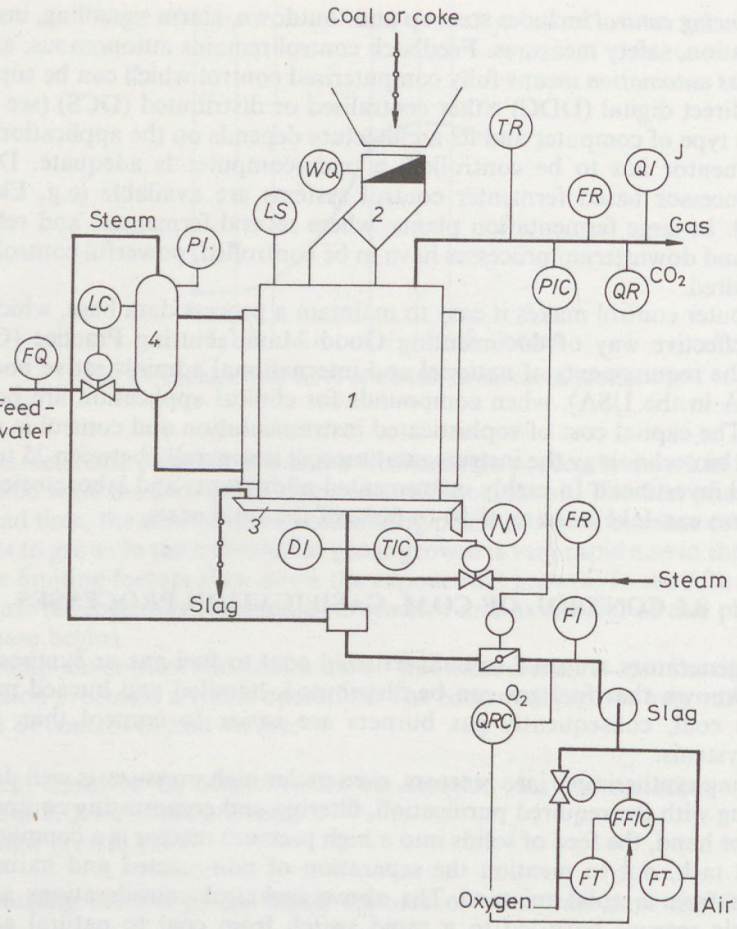


Fig. 8.9 Instrumentation of a coal gasifier. *1* gasifier chest; *2* feeder; *3* revolving grate; *4* waste heat boiler drum

Part of the coal is burnt only to carbon monoxide

$$C + \frac{1}{2} O_2 = CO + 122\,673 \text{ J}. \tag{8–3}$$

In the third, or reduction, zone the reduction of $CO_2$ to CO over the glowing coal takes place:

$$CO_2 + C = CO - 160\,773 \text{ J}. \tag{8–4}$$

It can be seen that this is an endothermic reaction, but the heat generated by the first reaction is more than needed.

Steam is mixed with the input air to utilise this excess heat for the so-called water–gas reactions:

$$C + H_2O = CO + H_2 - 118\,482 \text{ J}, \tag{8–5}$$

or

$$C + 2H_2O = CO_2 + 2H_2 - 161\,997 \text{ J}. \tag{8–6}$$

Equilibrium of the reaction products depends on temperature and pressure, because a reverse reaction may take place:

$$CO + H_2O \rightleftharpoons CO_2 + H_2 + 42\,256 \text{ J}. \tag{8–7}$$

Gas flows to the next zone, which is called the coke preheating and drying zone in coke gas generators or the degassing or coking zone in coal gas generators. If the feed is raw coal, the top zone serves for drying. The volatile components of the coal from the last two zones are mixed with the gas coming from the lower zones. Because coking is an endothermic process, coal generators operate at lower temperatures than coke generators.

Control and supervision of the various zones is the first control objective. Zone height and temperature have to be measured. In former days long steel rods penetrated the coal mass through a hole at the top, and from time to time a rod was withdrawn and inspected. The colour with which the rod glowed was the measure of temperature and the zone width could easily be seen from the length of the colour bands. The use of multiple temperature sensors can solve this problem with advanced control algorithms. In the newly developed gasification reactors coal powder is usually applied in fluidised or suspended form and temperature measurement is thus an easier task.

Gas quality is another important variable for supervision. The operating conditions can be determined by carbon dioxide analysis. If the $CO_2$ content is too high, this means that either there is too much steam in the feed or the width of the reaction zone is either too small or uneven. An excessive steam feed results in a low temperature in the reducing zone, and the reaction cannot take place as desired. If the zone is narrow and irregularly shaped, $CO_2$ gas can escape without reacting with glowing coal. When the $CO_2$ content of the gas is low (less than 3%) a temperature rise will follow, because steam flow is insufficient, and too much slag will be formed (scorification). Where the generator gas pipe is under draft, oxygen analysis is recommended to prevent air intake and possible explosion.

Air flow and pressure control are used to follow load demand. The pressure tap and sampling line on the raw gas pipe have to be designed for dirty gas (dust and tar content is high). A revolving grate drive is controlled by a temperature controller with a sensor below the grate. Slag is emptied by the revolving grate and outlet tray. On-off control or a variable speed drive may be applied, according to the grade of coal and the unit's construction. The width of the heat insulating slag layer, which protects the grate, is manipulated.

Charging of coal or coke is controlled by a three component controller. The coal level is measured, and the exhaust gas temperature and inlet steam pressure serve as correcting measurements. Determination of the grade of the coal being charged is possible by mechanical, ultrasonic or radioactive instruments but it is not easy.

Synthesis gas for ammonia production requires a lower $N_2$ content (25%) than is attainable with an air intake, and oxygen-enriched air thus has to be provided. Figure 8.8 shows a ratio cascade or end point controller. Gas is mixed in the ventilator, and water level and steam pressure are controlled in the steam generating jacket. Gas can be produced by the use of the same reactions in high pressure equipment, with a fluidised bed or with a tar suspension feed (e.g. Lurgi, Winkler, Koppers–Totzek, Texaco, etc. generators). The difficulties of solid material transport, slag forming and dust are the same and similar control strategies have to be applied. In the water–gas generator, cyclic operation of hot blowing and steam cracking is controlled by a time cycle controller.

## 8.7 NEUTRALISATION, WASTE TREATMENT CONTROL

Chemical processes with acids and bases which react to produce various chemicals, such as ammonium nitrate fertiliser, require pH control for neutralisation. Another field of neutralisation control is in industrial waste treatment. Environmental laws require the enforcement of pollution control and make the installation of sophisticated control systems necessary. The control of ion concentration in waste streams is one of the most difficult problems in the field of chemical process control.

Besides pH control, other ion controls and oxidation-reduction control, measurement of the total oxygen demand and other, mostly potentiometric, measurements are used. A detailed analysis of pH measurement and control can be found in some books [8.12], [8.15] and instrumentation handbooks. A brief description of pH measurement is necessary to understand the problems of neutralisation control.

### 8.7.1 ION CONCENTRATION MEASUREMENT

The acidity of an aqueous solution is measured by the concentration of hydrogen ions in it. Most of the instruments used in industry are based on the measurement of a potential difference between electrodes.

The basic equation of the potentiometric method is the Nernst equation

$$\varepsilon_{H_2} = \varepsilon_0 + \frac{RT}{nF} \ln c_i, \tag{8–8}$$

where $\varepsilon_0$ — unit potential of unit concentration (or activity);
$R$ — universal gas constant;
$T$ — absolute temperature;
$n$ — number of electron deficiency in the ion;
$\varepsilon_{H_2}$ — potential of the hydrogen electrode;
$F$ — Faraday constant (96.49 C/g ion);
$c_i$ — ion concentration, which should be replaced by ion activity $a_i = y_i c_i$, with $y_i$ being the activity coefficient.

To measure the potential (voltage) of a solution two electrodes are required, one for measurement and one for reference (i.e. zero value).

For solutions in water the dissociated ions are represented by their ion product the value of which at 25°C is

$$K_v = c_{H^+} \times c_{HO^-} = 10^{-14}. \tag{8–9}$$

The logarithmic relationship and the small values induced Sörensen to introduce a simpler notation

$$pH = -\log c_{H^+}. \tag{8–10}$$

In a neutral solution $c_{H^+} = c_{OH^-}$; consequently the pH value of a neutral solution is 7. The potentiometric measurement of pH values in nonaqueous solutions is also possible, but the neutral value depends on the solvent.

Because exact activity coefficients are difficult to obtain, a conventional pH scale is defined with the aid of buffer solutions. Such definitions can be found in national standards (US NBS or DIN 19260). The instruments are calibrated according to the following equation:

$$pH = pH_s - \frac{U - U_s}{U_N}, \tag{8–11}$$

where $U$ — the measured value;
$U_s$ — standard value of the buffer with $pH_s$;
$U_N$ — theoretical (Nernst) value.

Measurements of the potential of other ions than hydrogen are used for supervision and control of some processes. A widely used measurement is the determination of redox potential. The potential developed by oxidising and reducing ions is measured by gold or platinum electrodes. Because the redox potential is pH dependent, additional pH measurement is recommended. In some industries the pH value is used for redox potential measurement. The electrode potential can be calculated by a modified Nernst equation.

### 8.7.2 ELECTRODES

In industrial practice glass membrane measuring electrodes are generally applied as sensors. In special cases (e.g. the presence of fluorides) antimony measuring electrodes may be used instead. The high resistance of the glass membrane ($10^7$ to $10^9$ Ohm) is one of the main difficulties in the manufacture of pH measuring instruments. High impedance amplifiers ($>5 \cdot 10^{11}$ Ohm) and small zero drift ($<1$ mV; $<10^{-12}$ A) are characteristic.

Reference electrodes must have a conducting junction to the measured solution through a diaphragm. Calomel, silver–silver chloride and thalamid reference electrodes are mainly applied in industrial practice. The resistance of these electrodes has to be small ($<5$ kOhm) to obtain a genuine reference point. Cleaning of the electrodes is necessary if the solution is not clean or tends to crystallise or form deposits on the electrode surface. Several cleaning methods are known, including mechanical, ultrasonic, and liquid rinsing. Some are shown in Table 8.3. Glass

Table 8.3. Cleaning systems for pH electrodes
(after Polymetron, Switzerland)

| Measuring fluid is contaminated with: | Mechanical | | Chemical | | | Hydro-dynamic | Ultrasonic |
|---|---|---|---|---|---|---|---|
| | brush | rotary scraper | acid | base | emulsifier | | |
| Oils, fats | | + | | | + | | + |
| Resins (wood, pulp) | | | | + | | | + |
| Emulsions (latex) | | + | | | | | |
| Fibres (paper, textile) | | | | | | + | |
| Solid suspensions | | | | | | + | |
| Crystalline precipitates (carbonates) | + | + | + | | | | |
| Amorphous precipitates (hydroxides) | + | + | + | | | | + |

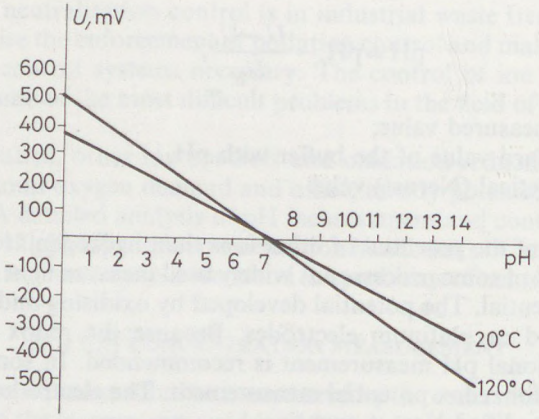


Fig. 8.10 pH isotherm lines

membranes have to be immersed in the solution and care should be taken to prevent drying out of the glass electrode.

The electrode potential is temperature dependent. With every electrode pair an isopotential point exists, which can be seen on the diagram of Fig. 8.10 with the pH isotherms. This indicates that temperature compensation is necessary if the temperature of the liquid changes. Automatic compensation is provided in most industrial instruments. The flow-through and submersible assemblies contain two electrodes and a temperature sensor, usually an RTD. Insulation of the connecting cables is of great importance. High resistance, double shielded insulation is required. The inner shield is connected to the reference electrode. Only one earthing point is allowed in a pH measuring circuit and this is usually through the reference electrode. In some cases a special earthing electrode may be used. The capacitance of the cable influences the time constant of the control loop. Frequent calibration

of the pH meter with standard buffer solutions is necessary at two points in the operating range. The electrode assembly has to be designed to facilitate the calibration.

### 8.7.3 CHARACTERISTICS OF THE pH CONTROL LOOP

The objective of pH control is generally the stabilisation of the pH value of the solution by adding reactants, which may be in gaseous, liquid or solid form.

The titration curve is characteristic of the behaviour of a neutralisation process. Typical titration curves are shown in Fig. 8.11, where the acid is HCl solution and the base NaOH solution. The effect of buffering is also shown (by dotted lines). The figure clearly demonstrates that control in buffered solutions is easier than control in unbuffered solutions. Because of the great sensitivity of the titration curve in the region of neutrality, special control methods have to be used. The gain of the process varies and frequently exceeds the range 1 to 1000. The nonlinear shape of the characteristic curve can distort the oscillation of reagent concentration. An example is shown in Fig. 8.12.

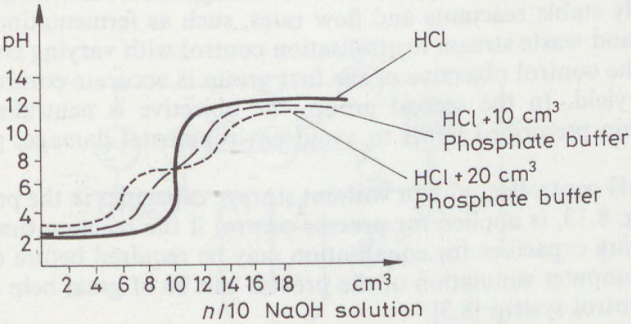


Fig. 8.11 Titration curves

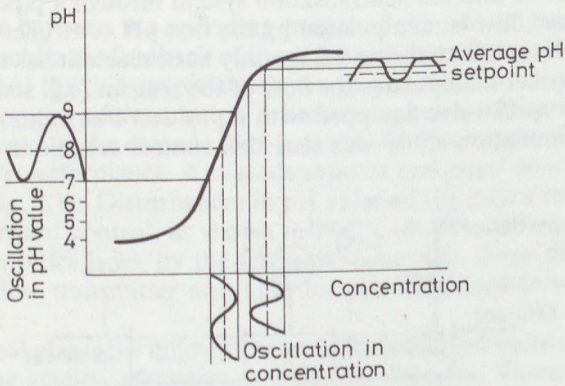


Fig. 8.12 Characteristics of pH control

Underlying the linear pH scale there is a logarithmic concentration change, and this involves an enormous range of dosing or flow control. Metering pumps operate for ranges in the vicinity of 20 : 1, control valves generally for 1 : 30 to 1 : 80 and special constructions reach 1 : 100. For pH control a range in excess of 1 : 1000 is required and for that two or more final control elements must be installed. The main characteristics of a pH control loop are:

— high gain and sensitivity;
— nonlinearity of the process;
— large disturbances of acid and base content;
— changing of the titration curve;
— extreme flow range and valve operating range;
— large time constants (mixing and reaction);
— earthing troubles of the measuring system.

### 8.7.4 pH CONTROL SCHEMES

Two groups of pH control systems can be distinguished: technological processes with relatively stable reactants and flow rates, such as fermentation or fertilizer production, and waste stream neutralisation control with varying conditions and chemicals. The control objective of the first group is accurate control of product quality and yield. In the second group, the objective is neutralisation of the effluents within prescribed limits to avoid environmental damage, penalties and fines.

A simple pH controller, with or without storage capacities in the process line, as shown in Fig. 8.13, is applied for process control if the reaction time constant is small. Buffering capacities for equalisation may be required before or after measurement. Computer simulation of the process can be of great help in the design of the pH control system [8.3].

Several methods of modelling and simulation of waste water neutralisation control systems have been published [8.12]. A two stage control system is shown in Fig. 8.14, which has been designed with the aid of computer simulation. Waste of variable pH flows into the neutralisation system through a pipeline. In the first stage, acid or base flow is manipulated by the first pH controller so as to obtain a slightly acid solution: in the second stage only basic reactant has to be added. The second pH controller manipulates the flow of the reagent (e.g. sodium hydroxyde solution) by a control valve equipped with a position transmitter. An important finding of the simulation study was that this control scheme is stable only if a

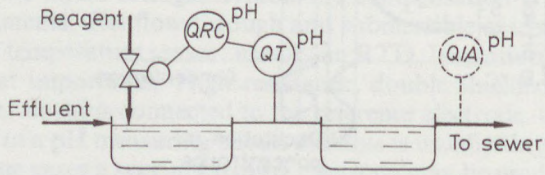


Fig. 8.13 Simple pH control loop

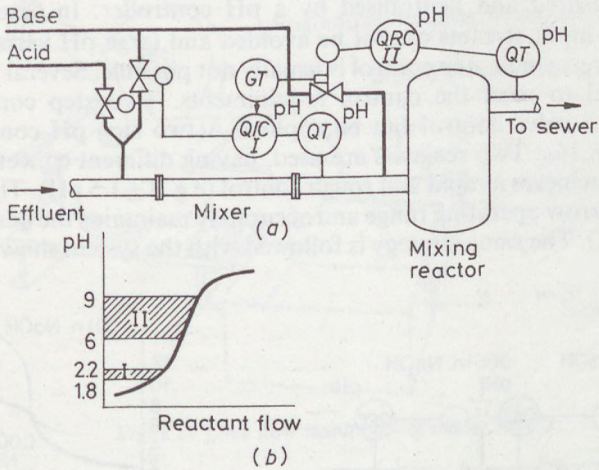


Fig. 8.14 Two stage pH control system. (*a*) scheme; (*b*) operating ranges

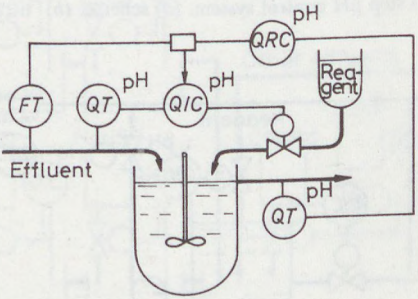


Fig. 8.15 Feed-forward pH control system

defined difference between the operating ranges of the two stages is maintained. The difference is set by the feedback of the valve position of stage II to stage I. The operating ranges of the two stages are shown in Fig. 8.13*b*.

The control loop for a fermentation process was shown in Fig. 8.5. In the case of large time constants, the cascade feed-forward, feedback control shown in Fig. 8.15 may improve performance. A cascade ratio or end point control scheme has been shown in Fig. 2.16. Disturbances in pH value of the inflow may be compensated by feed-forward control, as shown in Fig. 8.14. The reference value of the feed-forward controller is set by the feedback controller. Flow disturbances are measured by a flow transmitter and used to adjust the feed-forward controller [8.15].

In large chemical plants the inflow streams of the waste neutralising plant section may have varying acidity, alkalinity or buffering capacity. Therefore a separate collecting and pre-neutralisation basin, with mixing, may be used. The pH of the

effluent is measured and neutralised by a pH controller. In cases when great changes in the input streams cannot be avoided and large pH variations have to be matched, direct single step control is usually not possible. Several methods have been developed to meet the control requirements. Two step control, dilution methods or two valve control can be applied. A two step pH control system is shown in Fig. 8.16*a*. Two reagents are used, having different concentrations. The first controller achieves a rapid and rough control (e.g. $4 \pm 1.5$ pH). The second controller has a narrow operating range and accurately maintains the desired pH value (e.g. $7 \pm 0.5$ pH). The same strategy is followed with the system shown in Fig. 8.17,

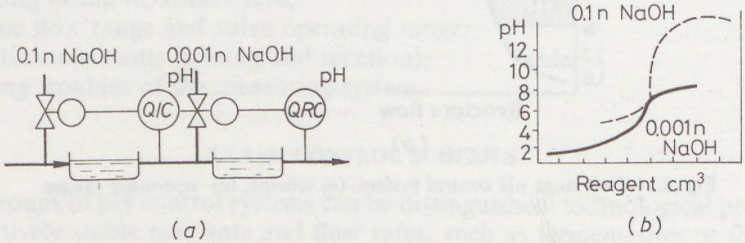


Fig. 8.16 Two step pH control system. (*a*) scheme; (*b*) titration curve

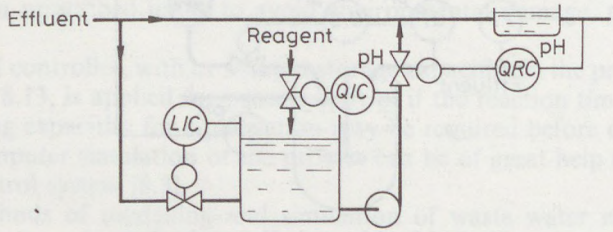


Fig. 8.17 Dilution type pH control system

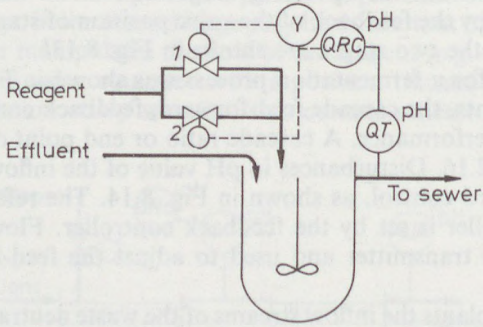


Fig. 8.18 Two valve pH control system (Shinskey). *1* linear control valve; *2* equal percentage control valve

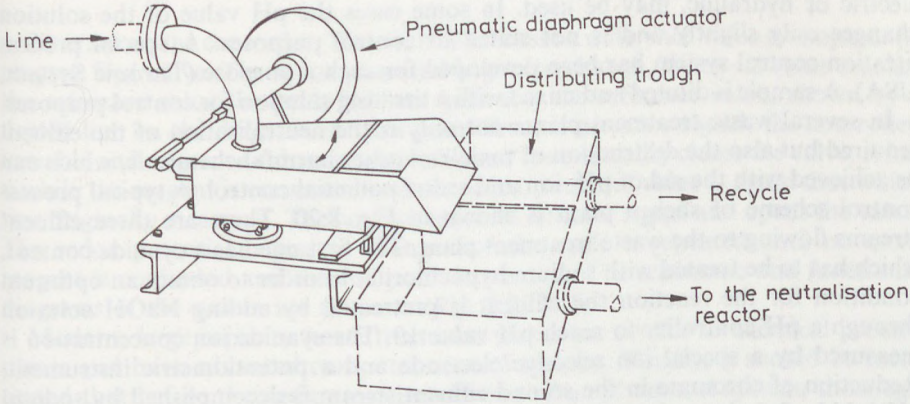


Fig. 8.19 Lime flow manipulating device (Kent)

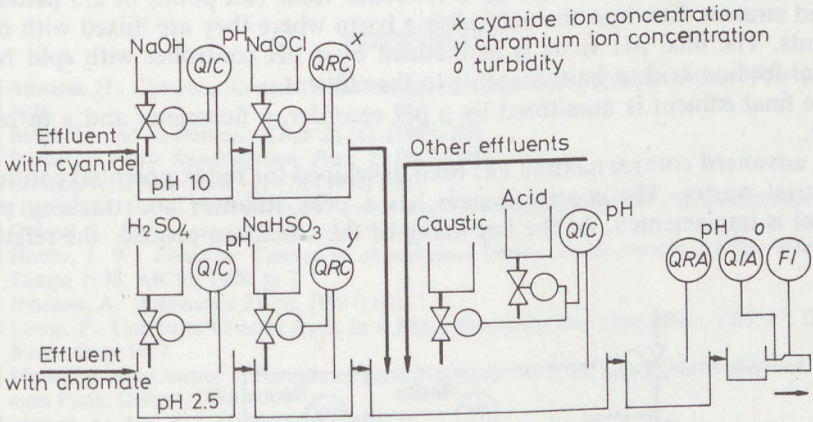


Fig. 8.20 Waste treatment control flowsheet

but with the use of only one reagent. The weak solution is prepared in the system by diluting the reagent with the effluent.

The large differences in reagent flow demand cannot be matched with one control valve. Fig. 8.18 illustrates a two valve system. It has been proved [8.15] that a large linear characteristic valve and a small equal percentage valve can be successfully applied for ranges 1 : 700 to 1 : 1000.

The cheapest neutralising base is lime, and therefore special attention has been paid to lime preparation and manipulation. A special lime flow control device developed by George Kent Ltd (UK) is shown in Fig. 8.19. Constant circulation is assured and the stream from a feeding trough is divided by a weir into two parts. One part flows to the neutralisation process, the rest is recirculated. Manipulation of the trough is effected by a pneumatic valve actuator. Other valve actuators,

electric or hydraulic, may be used. In some cases the pH value of the solution changes only slightly and is not suited to control purposes. A special process titration control system has been developed for such a purpose (Titronic System, USA). A sample is diluted and mixed with a titrating solution for control purposes.

In several waste treatment plants not only is the neutralisation of the effluent required but also the destruction of toxic and other harmful chemicals, which can be achieved with the aid of pH, ion and redox potential control. A typical process control scheme of such a plant is shown in Fig. 8.20. There are three effluent streams flowing to the waste treatment plant. The first one has a cyanide content, which has to be treated with sodium hypochlorite. In order to obtain an optimum condition for the reaction the effluent is pretreated by adding NaOH solution through a pH controller to reach pH value 10. The cyanide ion concentration is measured by a special ion selective electrode and a potentiometric instrument. Reduction of chromate in the second effluent stream is accomplished by sodium bisulphide fed through a chromium ion concentration controller. To achieve optimum conditions in the reactor the effluent is pretreated by adding sulphuric acid through a pH controller with a reference value (set point) of 2.5 pH. Both treated streams flow into the neutralising basin where they are mixed with other effluents. The final pH value is maintained by a pH controller with split range control feeding acid or base reagents to the effluent.

The final effluent is monitored by a pH recorder, a flowmeter and a turbidity meter.

An advanced control method has been developed for redox potential control of industrial wastes. The control system has a peak follower and tracking mode control is implemented. At the beginning of the oxidation process, the reference

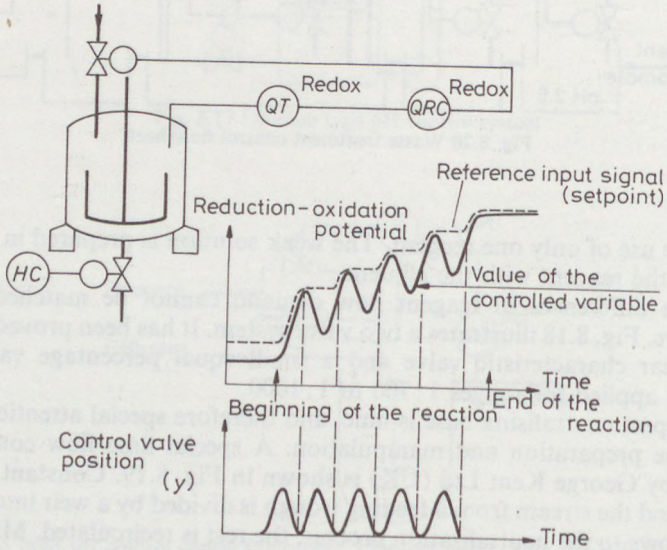


Fig. 8.21 Redox potential control with peak follower system

point is set on the controller. The controller senses a difference value and opens the reagent feed valve. The redox potential begins to change. When its value reaches the reference value the peak follower subtracts the reference value, shown by a dotted line on the diagram. At this point there is no error signal, the controlled variable and reference value are identical, and the controller closes the valve. After a while the reagent is consumed and the redox potential value is again that which was originally measured. The controller senses an error signal and opens the valve. The redox potential begins to change and the cycle is repeated until no more reagent is consumed and the end point is reached. The schematic and functional diagrams of the system are shown in Fig. 8.21 [8.5].

Modern, large capacity waste treatment plants are similar to chemical process plants and have advanced computer control systems. Finally, it should be mentioned that before the design and installation of a pH control system, thorough measurements and detailed analysis are recommended. It is not recommended to install a pH controller at a location where no pH measurement records are available.

## REFERENCES


[8.1] Amrehn, H.: Computer Control in the Polymerisation Industry. *3rd IFAC Conf. PRP* Brussels 1976.

[8.2] Bauer, H. and co-workers: *Z.msr* 26 (4), (1983) 209.

[8.3] Bender, E. (Ed.): *Regelungstech. Prax.* 23 (9), (1981).

[8.4] Brattka, B.: *Chem. Tech.,* 11 (7), (1982) 858.

[8.4a] Bushell, M. E. (Ed.): *Computers in Fermentation Technology*. Elsevier Sc. Publ., Amsterdam 1988.

[8.5] Grässel, I.: *Regelungstech. Prax.,* 16 (1974) 126.

[8.6] Hobbs, J. W.: *Computer Control of an acetylene hydrogenation process.* AIChE Workshop, Tampa 1976. AIChE 1979, p. 7.

[8.7] Johnson, A.: *Automatica* 23 (6), (1987) 691.

[8.8] Losco, F.: Computer Control Appl. in a Batch Polymerisation Plant. *Proc. CEF 87. Giardini Nacos,* Italy 1987.

[8.9] Modelling and Control of Biotechnological Processes. *1st IFAC Symp. Nordwijkerhout.* Pergamon Press, Oxford, 1986.

[8.10] Monod, J.: *Ann. Rev. Microbiol.* 3 (1949) 3.

[8.11] Nakagava, H.: *Chemical Economy and Engineering Review* 4 (3), (1970) 27.

[8.12] *Neutralization of Waste Water by pH-control.* ISA Monogr. No. 7. ISA Research Triangle Park 1978.

[8.13] Nyiri, L. K. and co-workers: *Adv. Microbiol. Eng.* P.2, *Bioeng. Symp.* No. 4. (1974) 613.

[8.14] Pornuswamy, S. R., S. L. Shah: *Ind. Eng. Chem. Res.* 26 (1987) 2229.

[8.15] Shinskey, F. G.: *pH and pIon Control in Process and Waste Streams.* Wiley-Interscience, New York 1973.

[8.16] Sommer, E.: *Process Automation* 1 (1982) 26.

## PART III

# PROCESS PLANT INSTRUMENTATION

*Automatic control of unit processes and unit operations require instruments, controllers, computers and auxiliary equipment. The chemical engineer has to be familiar with the principles of their selection and the ranges of application. Software is a new group of control tools which has to be taken into consideration in control system design and use. Plant instrumentation is more than a mere assembly of control systems for individual machines and unit operations. The principles and capabilities of the instrumentation of large process plants are briefly presented here. Utilities and maintenance are part of the plant control and information system. The use of computers is required for the plant and process management systems. Last but not least, economy of control and calculation methods are involved.*

CHAPTER 9

# PROCESS CONTROL HARDWARE ELEMENTS

Modern process control systems include sensors ranging from the simple thermocouple to the microprocessor controlled gas chromatograph, and operator interfaces ranging from the simple manometer dial to the computer driven colour VDU. Several handbooks are available on instruments, control systems and computers which contain details of process control hardware [1.5], [1.9], [9.1], [9.14]. Some books deal with the instruments and controllers used in the chemical and petroleum industries [9.10], [9.16]. The aim of this Chapter is to provide a general view of hardware elements available and their application in the chemical and allied industries.

The technical development of sensors, instruments, controllers, microprocessors and actuators is extremely rapid, so up-to-date information has to be gathered from periodicals and the manufacturer's literature (catalogues, etc.). The largest collection of descriptions of measuring principles, methods and devices can be found in the volumes of a German periodical 'Technisches Messen' (formerly ATM). Using a special code, the individual publications can be sorted according to themes and retrieval is thus made easy.

The fastest development is in the use of microelectronics. Microprocessors with semiconductor memories, input/output (I/O) interfaces and connecting buses are taking over the control functions in electrical measuring and control systems. Many sensors work on the basis of newly developed principles, mostly solid state devices, and are equipped with increasing 'intelligence'. It is hard to distinguish between an intelligent sensor and an electronic transmitter.

The extended use of electronics in measurement and control systems changed the picture of instrumentation in the chemical process industry (CPI). The share of pneumatic and electric analogue instruments and controllers is diminishing and the application of digital techniques and computerisation is expanding. Instrument manufacturers have adapted the new techniques exploited the possibilities of highly integrated circuits, optoelectronics and microprocessors, learned the use of software development systems and have thus brought new generations of digital instrumentation to the fore. Digital control systems and the application of computers are dealt with in Chapter 10.

## 9.1 SENSORS AND TRANSMITTERS

In the chemical industry, nearly 50% of the measured variables are temperatures; the pressure, flow and level measurements are also frequently used, and analysis of the process streams is also of great importance. There is another group

of sensors with a bright future and this is the family of biosensors. The industrial application of biosensors emerged with the expanding application of biotechnology in industry. In the following only the trends and specialities will be discussed, because conventional instruments are abundantly treated in the literature.

### 9.1.1 PRIMARY SENSING ELEMENTS

According to the definition used in IEC 902, a sensor is the primary element of a measuring chain which converts the input variable into a signal suitable for measurement.

Temperature is the most frequently measured variable in the CPI and therefore the application of cheap and reliable sensors is essential. Different types of thermocouples and resistance thermometers (RTDs) are generally used. Thermocouples are applied for high temperature measurement in a variety of protecting tubes. The most important types are gathered together in Table 9.1. Resistance thermometers are used at low and medium temperature ranges. The conventional wire wound RTDs are gradually changing to thin film RTDs, and only platinum is used. Their small size and short response time are advantages of the new types. Thermistors and other solid state temperature sensors are also available.

The primary flow sensor most frequently used is the orifice, which is relatively cheap and simple to manufacture and install. According to statistics nearly 60% of all throttling primary devices are standard orifices, 14% calibrated pipe sections, 12% welded orifices and 14% segment orifices, Venturi tubes, nozzles, etc. Throttling devices are used in 2/3 of all implementation, positive displacement instruments in 16%, variable area flowmeters in 14% and magnetic induction flowmeters in 2%, with a small remainder of all other types. These figures are now typical of a large European chemical plant but will presumably change in favour of the new electronic flow sensors and flowmeters (see Table 4.3). Pitot and Prandtl tubes are used if velocity measurement is sufficient. A relatively new device, working on the same principle but with multi-hole pressure taps, is the Annubar (Dieterich, USA), with a specially shaped 'diamond' shaft, which can be changed and replaced without disturbing the process flow. In some cases insertion of a sensor is possible in existing pipes under pressure [9.17]. An example is shown in Fig. 9.1. A special

Table 9.1. Thermocouple combinations

| Wire materials | EMF for 100 °C | Tolerance | Extension wire | Application range °C ± mV | | Code |
|---|---|---|---|---|---|---|
| | | | | low | high | |
| Copper-constantan | 4.25 mV | 0.14 | brown | −200 | + 400 | T |
| Iron-constantan | 5.37 mV | 0.17 | blue | 0 | + 700 (900) | J |
| NiCr-NiAl | 4.10 mV | 0.12 | green | 0 | +1000 (1200) | K |
| Pt-PtRh10 | 0.64 mV | 0.03 | white | 0 | +1600 | S |
| NiCr-constantan | 6.32 mV | 0.30 | | 0 | + 700 | E |

*Note:* Constantan is a copper-nickel alloy
(For further details see IEC 584 or ASME 230, BS 4937, DIN 43710).

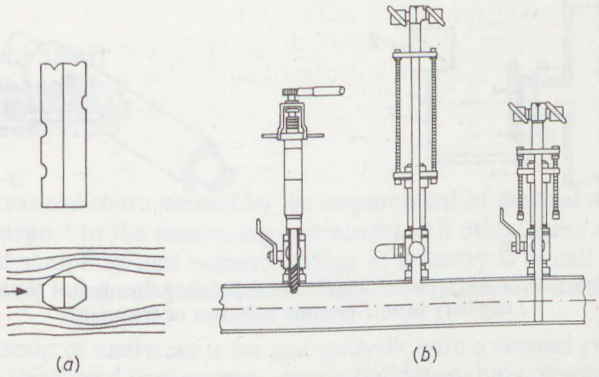


Fig. 9.1 Multi-hole Pitot tube (Annubar, Dieterich Standard). (*a*) principle; (*b*) changing under pressure

family of sensors includes the non-invasive and non-intruding sensors [9.8]. These have several advantages such as avoidance of fitments which reduce the strength of process vessels, which are liable to release the process fluids if damaged. Installation, repair and verification are possible without interruption of the process operation. Ultrasonic and correlation type flowmeters are among the items of this group. A special sensor, one which has hitherto not been considered as a sensor, is the fibre optic cable. This cable transmits light from the light source to the process fluid and transmits reflected or unabsorbed light to the receiving (sensing) element of an instrument. The advantages of fibre optics include their immunity to EMI, RFI and microwave interference and their ability to transmit measurements over long distances (see Chapter 11). Light, rather than electricity, can be used in hazardous or aggressive environments.

A common method for fibre optic sensing is amplitude or intensity modulation used in liquid level measurement. Another technique is spectral modulation. Light from a very stable LED source is transmitted along a multi-core fibre optic cable to a sensor tip cavity. Process variables such as pressure, temperature or refractive index cause changes in the shape of the cavity, which in turn cause spectral microshifts in the reflected light from the cavity. Last but not least, the strain gauges have to be mentioned as the primary sensing elements of load cells, load beams and pressure transmitters.

### 9.1.2 PRIMARY INSTRUMENTS

Instruments in direct contact with the process fluids and built as an integral unit with the sensing element are included in this group. The best-known primary instruments are those used for pressure and level measurement. Pressure and differential pressure can be measured directly by liquid filled instruments, bell type instruments, piston type instruments, membrane type instruments, elastic deformation instruments (Bourdon tube, bellows).

The various other pressure and differential pressure sensors, like the solid state, capacitance, resonance wire, strain gauge, etc. require electric receiving instru-

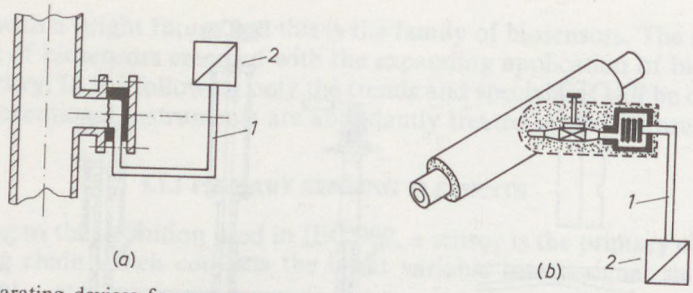


Fig. 9.2 Separating devices for pressure sensors. (*a*) separating membrane; (*b*) separating bellows. *1* capillary tube; *2* pressure indicator or transmitter

ments. When the pressure of a highly corrosive, extremely viscous or high temperature fluid has to be measured, special separating and protecting devices have to be installed. In Fig. 9.2*a* a separating membrane is shown, and in Fig. 9.2*b*, a separating bellow. The instrument and the capillary tube are filled with silicone oil, or for high temperature with a sodium–potassium mixture. The length of the capillary tube influences the response time of the instrument, because of hydraulic phenomena. This lag is a few seconds for high pressures and short distances, but can be 100 s for 100 mbar and a length of 12 m. Level indicators and flowmeters were presented in Chapter 4. Liquid density meters can be grouped according to their working principles:

aerometer (hydrometer);
differential pressure;
U-tube (fixed volume) weight meter;
oscillating (vibrating) meters;
radioactive densitometer;
balance type meters.

The various types of electric oscillation densitometers are available as recording, transmitting and controlling instruments. Aerometer type instruments cannot be used for fluids which are not clean. The thermometers are well-known members of this instrument group. Liquid filled thermometers are not recommended for industrial use; mercury in particular must be avoided. Mechanical (bimetal) thermometers and manometric temperature measuring instrument are rarely used. Optical temperature measuring instruments should be mentioned here. Conventional radiation pyrometers are replaced in some cases by fibre optic thermal monitoring systems. The photodetector is connected to an electronic instrument.

### 9.1.3 ON-LINE ANALYSERS

The speciality of chemical process instrumentation is the application of on-line process analysers [9.11]. Because of the increasing importance of analysis and the problems of sample preparation, a survey is given here. Several authors distinguish six areas of process analytical chemistry,

— off line
— at line
— on line (intermittent)
— on line (continuous)
— in line
— noninvasive.

The first two areas are characterised by the requirement of manual removal of the sample and transport to the measuring instrument. All other areas use automatic instruments and sampling, and common usage in industry is to call these 'on line analysers' the class being subdivided according to functionality or the position of the sensor.

The largest group of analysers is for gas analysis, with a second group of liquid analysers and a third, and very modest, group for the analysis of solids. Generally only one component is measured by one instrument; exceptions are the gas and liquid chromatographs, the near infrared instruments and the mass spectrometers.

### *Gas analysers*

Gas analysers function on the following principles:

I. Chemical analysis
   volumetric,
   reaction (burning),
   absorption heat.
II. Physicochemical analysis
   adsorption or absorption heat,
   colour,
   electrochemical (coulometry),
   chromatography,
   electrical conductivity.
III. Physical analysis
   heat conductivity,
   calorific value,
   absorption of electromagnetic radiation (IR, light, UV),
   magnetic (paramagnetic, thermomagnetic),
   radioactive,
   density measurement,
   sonic and ultrasonic,
   light interference,
   mass spectrometry,
   solid state gas sensor application.

Humidity measurement has been discussed in Chapter 6. Smoke density control can be grouped with gas analysers, although strictly speaking it is not analysis. The success and reliability of on-line gas analysis do not depend only on the application of a suitable analyser; an appropriate sampling system has to be employed, too.

The capital cost of a sample preparation and handling system is comparable to that of the analysing instrument itself.

Fig. 9.3 shows the flowsheet of a gas sampling and conditioning system. A sampling probe is installed in the equipment (stack, reactor) for sample withdrawal. The shape and material of the probe depend on the temperature, corrosiveness and dust content of the sampled gas. In some cases solid or paste-like deposits are formed on the proble, blocking sample flow. Mechanical cleaning has to be provided through a three way ball valve (cock) for such installations. For gases with a high dust content a prefilter on the probe is required. High temperature probes have cooling jackets and are connected to cooling systems. The sample is cooled to remove condensables before entering the analyser. The cooler may be water cooled or refrigerated. Peltier type electric coolers are also available. Heating of the equipment may be necessary to avoid condensation in the filters. Powder and dust can be removed from the sample by a mechanical filter, an electrofilter, or by washing with an appropriate liquid. Gas transport and pressure control systems depend on the line pressure. For pressures below 250 Pa a ventilator or membrane pump is required. A pressure reducer is necessary for high pressure gases. Special adsorbers may be installed in the sample line if the elimination of some components is required. A fine filter is used ahead of the analyser for eliminating possible remaining dust and humidity and for subsequent visual inspection. The clean sample flows to the analyser at constant pressure through a flow indicator or flow controller. The material of the sampling tube has to be selected with special care in the case of trace gas analysers because the inner surface of the tube might adsorb or react with one component and thus produce a false reading. Auxiliary gas is used in several analysers, especially in gas chromatographs. High purity calibrating gases are required for instrument calibration. Back pressure or blow-down control is used in some analysers.

The sampling time lag can be calculated from pipe diameter, pipe length and gas velocity. Gas flow is specified by the analyser manufacturer, and its value is usually small. This would mean using a very small pipe, having an impractical diameter, to get a reasonable time lag if the distance between sampling point and analyser cannot be kept short. A larger diameter sampling tube and recycling or bypass sampling line can be installed with high velocity flow. The principle of these methods is shown in Fig. 9.4. A bypass system has to be used if one analyser is

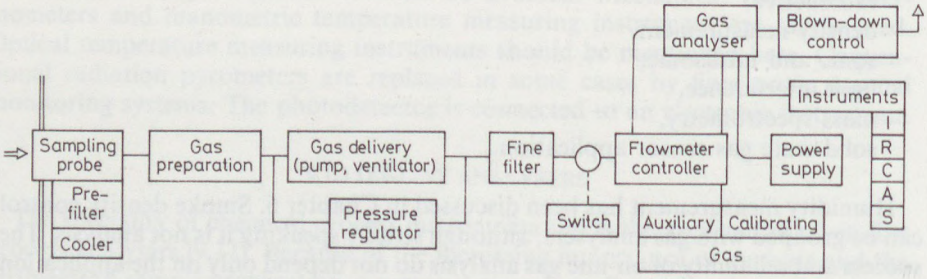


Fig. 9.3 Flowsheet of a gas sampling system

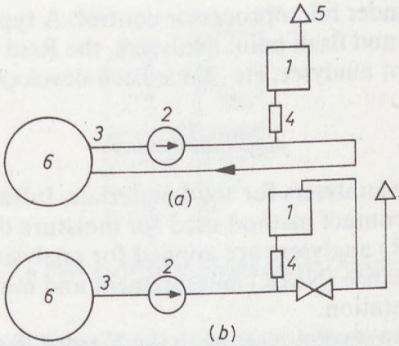


Fig. 9.4 Sampling lines. (*a*) recycling; (*b*) bypass line. *1* analyser; *2* pump; *3* sampling line; *4* flowmeter-feeder; *5* blow-down; *6* process equipment or pipe

serving more than one sampling line, to inject fresh samples into the analyser. Pressure reducers on high pressure systems should be placed close to the sampling point, to increase the gas velocity and shorten the time delay [11.6].

*Liquid analysers*

Measurement of the physical properties is frequently sufficient instead of true chemical analysis. The main parameters and principles applied for liquid analysis are the following:

— electrical conductivity;
— dielectric constant;
— hydrogen ion concentration;
— redox potential;
— polarography;
— coulometry;
— depolarisation;
— ion-selective membrane electrodes;
— refractive index;
— spectroscopy (IR, light, UV);
— colorimetry;
— radiometry;
— liquid chromatography (HPLC);
— titration;
— vapour pressure;
— density;
— viscosity;
— surface tension.

Automatic chemical analysers have been developed for laboratory use (e.g. Contiflo, LMIM, Hungary). The automatic analysers are mechanically automated,

small chemical plants under microprocessor control. A typical scheme is shown in Fig. 9.5. The end point and flash point analysers, the Reid vapour pressure (RVP) meter, true boiling point analyser, etc., have been developed especially for the oil industry.

*Solid analysers*

There are few on-line analysers for solid materials. Infrared radiation reflection measurement is a non-contact method used for moisture determination, and near infrared reflection (NIR) analysers are applied for analysing several components. Nuclear magnetic resonance (NMR) measurement and mass spectrometry require sophisticated instrumentation.

Spectroscopy is used in several cases, with the X-ray diffractometer being applied in cement factories. Automatic sampling of solids requires specially designed individual devices. A relatively simple sampling device is shown in Fig. 9.6 for vertical ducts. An open box with a removable base plate is installed inside the duct. For sampling, the base plate is inserted and the filled box retracted for analysis. The analyser is in this case an infrared reflection type instrument, but other types can be used, too. After analysis, the box is replaced, the base plate retracted and material falls through the hollow crate. The device is again ready for sampling. Analysers generally require frequent supervision, calibration and maintenance. In large chemical plants where hundreds of on-line analysers are installed, automatic self diagnosis and signalling instruments are useful.

The application of microprocessors made it possible to develop a new generation of gas analysers. The services available for the Caldos and Magnos gas analysers (Mannesman H&B, Germany) make it easy to program, configure, calibrate, diagnose and operate the analysers. The electronic environment of the sensing elements is digital and thus several measuring ranges are preselectable with the same hardware. Linearisation of the characteristic curve of the analyser is done automatically by the microprocessor and the data base stored in the unit's memory. A self diagnosis facility is incorporated for signalling and maintenance. Automatic calibration is possible with standard calibration gases. A digital display and keyboard serve for communication with the operator [9.13].

Analysers with several different sensors and special computing facilities are available for frequently required routine analysis, such as flue gas composition

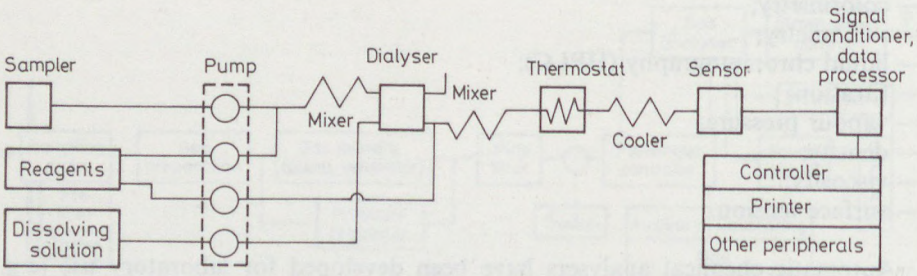


Fig. 9.5 Automatic chemical analyser (Contiflo, LMIM)

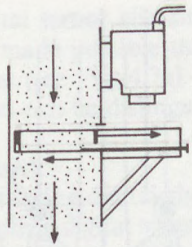

Fig. 9.6 Bulk material sampling device (Anacon)

measurement. When one measurement is not sufficient for analysis, a set of different physical and physicochemical instruments is installed and the composition of the sample is calculated from the measured values with the aid of relationships between physical properties.

### 9.1.4 BIOSENSORS

Biosensors comprise two parts: a biological molecule or cell which detects the analyte, and a transducer which usually converts the detection event into an electrical signal. The biological components of biosensors fall into two broad categories:

(*i*) biocatalysts,
(*ii*) bioreceptors.

For *biocatalysts* (e.g. enzymes) recognition and binding of a molecule is followed by a chemical reaction, with the subsequent release of products. Enzymes are natural protein catalysts which effect reactions rapidly at moderate temperatures. *Bioreceptor* sensors (e.g. antibodies, cell membrane receptors) are molecules which bind non-catalytically and irreversibly.

The transducer of the biosensor is a device that converts a chosen parameter into an electrical signal. There are optical, electrochemical, thermal and piezoelectric devices. Electrochemical detectors, working with amperometric, potentiometric or conductimetric techniques, are the most commonly applied transducers in biosensors.

Examples of biosensors are the glucose concentration measuring sensors, using glucose oxidase enzyme. The amperometric transducer measures with a platinum or carbon electrode. Measuring penicillin concentration is possible by using an enzyme, $\beta$ lactamase, which converts penicillin to penicillin acid and this can be detected by a pH electrode as shown in Fig. 9.7. The enzyme has to be immobilised by physical or chemical methods (e.g. membrane, adsorbent). Another type of transducer works with the application of ion sensitive field effect transistors (ISFETs) [9.5].

The industrial on line application of biosensors is limited because sterilisation, round the clock service and high reliability pose problems at the present time. The rapid development of biosensors will solve these problems.

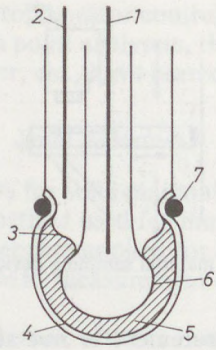


Fig. 9.7 Enzyme based biosensor. *1* sensor electrode; *2* reference electrode; *3* diaphragm; *4* membrane; *5* enzyme layer; *6* glass electrode membrane; *7* O-ring

### 9.1.5 TRANSMITTERS, TRANSDUCERS AND TELEMETRY

Centralised control rooms and computer control systems need unified signals from the sensors. Pneumatic and electric transmitters are used to generate signals for remote receivers which can be indicators, controllers, recorders, or control computers.

The primary element of the sensor may or may not be integral with the transmitter. A solid state sensor can easily be integrated with an analogue–digital converter and amplifier. In this way, intelligent sensors can be produced with built-in microprocessor and bus coupler on one chip. The principle of the integrated sensor and the intelligent sensor is shown in Fig. 9.8. Intelligent sensors are essential for self diagnosis in digital control systems. Computer software has been developed to find and report faults in the system, but most faults are found in the sensors and a conventional 'dumb' sensor will not report its own failure. A general scheme of an intelligent sensor is shown in Fig. 9.9. The sensing part may be on the same chip, or it may be separated and connected with a flexible cable. Intelligent sensors can automatically compensate for variations in ambient conditions and process conditions [9.7]. It can be seen that there is no sharp distinction between a transmitter and an intelligent sensor.

Embedding a microprocessor in the transmitter makes it possible to use digitally stored data for precise ranging, to provide corrections for all of the nonlinearities of the sensors. Thus its range can be changed simply by instructing the microprocessor to look up a different table of values. As an example one may mention the first 'smart' transmitter to be introduced in 1983: the ST 3000 (Honeywell, USA). This pressure transmitter has a silicon-type sensor which is coupled to a pulse modulator. An 8-bit microcomputer is built in. The measuring range can be changed remotely by a dialogue unit (Smart Field Communicator = SFC). Changes from 1 to 400 can be programmed, and telecommand, telecalibration, configuration and reading of the microcomputer memory is possible with the SFC from a distance of up to 1500 m [9.2]. A fully digital intelligent transmitter is e.g. the 820 series (Foxboro/USA) pressure transmitter, which is based on vibrating wire

technology. The inherently digital sensor eliminates the need for analogue-digital conversion. The high accuracy made possible the application of this principle for high precision level measurement (see Fig. 4.7*a*).

Five types of output interfaces can be distinguished:

— A analogue signal (4 to 20 mA);
— B analogue signal with interrupting digital signal;
— C analogue and non interrupting digital signals;
— D digital signal, point-to point communication;
— E digital signal, multipoint communication.

Digital communication required new concepts for smart or 'wise' transmitters and a new protocol, HART (Highway Addressable Remote Transducer) has been adopted by several manufacturers (e.g. Rosemount, Fisher and Porter). This protocol allows simultaneous digital and analog communication. On the other side of the transmitter range are the nonreparable, throw-away transmitters.

Transformation of signals is required in several cases, and transducers are installed for this purpose. When a current signal has to be changed to a voltage signal for computer input, a precision resistance is sufficient. The specification of a transmitter is one of the important tasks of the control engineer.

The measuring range, local indication, reliability, output, power supply, electrical and enclosure classifications, temperature, humidity and environmental limitations, materials of construction, seals and packings, the process and pneumatic or electrical connections, accuracy, repeatibility, stability, resolution, drift, dead band, linearity, and effects of temperature, static pressure, vibration, power supply variations, load, mounting position, etc., and the RFI/EMI effect have all to be considered. Accuracy in the field is usually not identical with the accuracy mea-

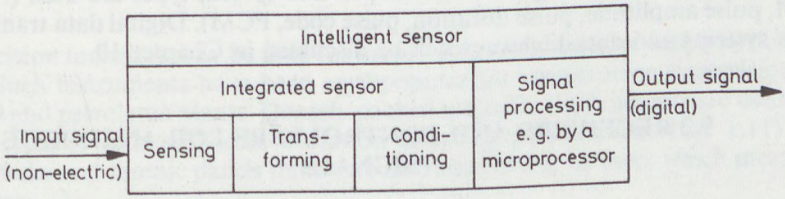


Fig. 9.8 Intelligent sensor principle

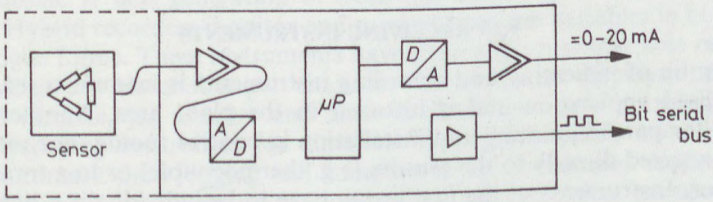


Fig. 9.9 Intelligent sensor-transducer

sured under reference conditions. Demorest published an example [9.9] of a flow transmitter with 0.20% reference accuracy and proved that the real accuracy was 1.13% under normal plant conditions.

It is preferable to use identical types of transmitters within one plant, because spare parts are the same (except for the sensors). If this is not economical, transmitters for measuring the same parameter should be of the same type. The connection to the process fluid has to be designed carefully to avoid corrosion, plugging, crystallisation, boiling, etc. Maintenance, verification and change of the transmitters may need isolating valves or valve groups.

Telemetry is concerned with the transmission of measured physical quantities to a convenient remote location. Conventional telemetry uses pneumatic or electric analogue signals generated by the transmitters. The standardised range of pneumatic signals accepted world wide is 0.2–1 bar gauge (20–100 kPa gauge or 3–15 psi) [IEC 381]. Standard electric signals come in two groups:

the true zero

| | |
|---|---|
| 0–5 mA DC | 0–+5 V |
| 0–20 mA DC | 0–+10 V |

and the live zero

| | |
|---|---|
| 4–20 mA DC | +1–+5 V |
| | −10–+10 V |

Resistance (potentiometer) telemetering is used in older plants. Special position telemetering can be applied with Selsyn type induction systems. Wireless telemetry requires radio equipment to be connected to the sensing and receiving instruments. Modulation techniques are well developed and several types are used (AM, FM, PM, pulse amplitude, pulse duration, pulse code, PCM). Digital data transmission, bus systems and data highways will be discussed in Chapter 10.

## 9.2 RECEIVERS AND CONTROLLERS FOR ANALOGUE SIGNALS

Signals representing measured values have to be received, displayed and processed for recording or control.

### 9.2.1 RECEIVING INSTRUMENTS

One group of indicating and recording instruments is manufactured for local, decentralised application and is installed in the plant area. Another group is designed for panel mounting and installation in control rooms. The receivers are either connected directly to the sensors (e.g. thermocouple) or to a transmitter or transducer. Instruments of the first group have to be individually adjusted to the sensor and the required measuring range. Receivers connected to standard output

transmitters have identical parameters and ranges, only the scales may be different. The pneumatic instruments are pressure gauges with the same range, and the electric instruments are ammeters with the same range. Instrument size is standardised, and there is little difference between the instruments of different manufacturers.

The conventional pointer-scale display has been replaced in new instruments by a digital display or an illuminated column display. Different physical phenomena are used to provide these displays. Light emitting diodes (LED), liquid crystals (LC), fluorescent and gas discharge types are available. The working principle and a picture of a gas discharge indicator are shown in Fig. 9.10.

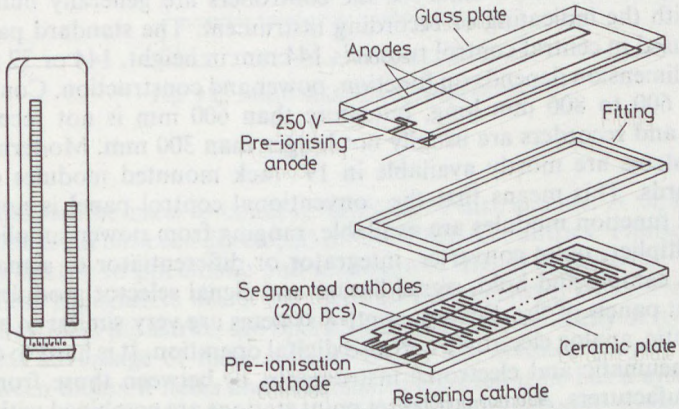


Fig. 9.10 Gas discharge type indicating instrument

A precision indicator may be used for monitoring many sensors with a switching device. Such instruments have been very popular for temperature supervision in chemical and petroleum plants. Densely packed indicating instruments are used for control systems with mid-scale deviation scanning pointers (see Fig. 1.11). In control desks and mosaic panels miniature instruments can be used, which measure 44 × 44 mm.

Recorders are available in several types. Single point and multipoint, direct coupled and automatically compensated recorders, with circular or strip charts, can be chosen. A new generation of electronic recording devices is the hybrid recorder. Hybrid recorders monitor and print out process variables in both digital and analogue forms. These instruments have generally programmable ranges and alarms which are assignable per channel. Alphanumeric displays indicate the measured variable, tag number and date. Several types have data logging programs. Recording controllers for standard signals are widely used in control panels. Automatic data logging and computer aided supervision make analogue recording in most cases superfluous; only a few trend recorders are necessary. In digital control systems the measured values are indicated on visual display units.

### 9.2.2 CONTROLLERS AND ACCESSORIES

Analogue controllers are grouped according to the power applied. Pneumatic, electric, hydraulic and mechanical controllers are used. The advantages and drawbacks of each system have been widely discussed in the past and methods of evaluation have been published [1.16]. With the advent of digital control systems the scene changed and it no longer seemed important to consider this problem. At present universal hydraulic controllers are scarcely used at all (except in logic control), and pneumatic and analogue electric controllers are applied to decreasing degree. There is a small but steady demand for mechanical or direct-acting controllers in process control and they will be presented in the next Section.

Central, panel mounted units for the controllers are generally built into one housing with the indicating or recording instrument. The standard panel instrument size used in central control rooms is 144 mm in height, 144 or 72 mm width. The third dimension depends on function, power and construction. Controllers are in general 600 to 800 mm long, but more than 600 mm is not recommended. Indicators and recorders are usually not longer than 300 mm. Modern electronic control systems are mostly available in 19″ rack mounted modules on printed circuit boards. This means that the conventional control panel is not required. Additional function modules are available, ranging from power supplies through adder, multiplier, pulse converter, integrator or differentiator to signal forming, time delay, sample and hold, signal limiter and signal selector modules.

The front panels of the different control systems are very similar in appearance for pneumatic, analog electronic and also digital operation. It is hard to distinguish between pneumatic and electronic instruments, or between those from two different manufacturers. Auto-manual set point stations are combined with bumpless transfer to the controllers, and many systems provide connections to computers for supervisory control (SDC or SPC). Operators in the chemical industry are accustomed to this type of display on panel instruments and there are microprocessor based controllers (e.g. Teleperm D from Siemens) which have the same front dimensions and appearance as the analogue ones.

Stand alone, one loop digital controllers with analog input and output are available in great variety and can be used in similar ways to the conventional analog electronic controllers. The reduction of the price/performance ratio made it possible to use such controllers. The advantages of the digital controller are its great flexibility, the numerous selectable control algorithms, the availability of a self tuning facility and, in most types, communication with other digital systems and computers. The front panel of the stand alone digital controller may be similar to the analogue ones, as mentioned earlier, but most types have a digital display and a keyboard. A hybrid type with both digital and bar-type analogue indication is shown in Fig. 9.11. The concept is similar to the Quick-Scan (see Fig. 1.11) type mentioned above, but with digital electronics.

Limit switches for alarm functions can be fitted on most panel instruments. Although most controllers are installed in control rooms, field controllers are also manufactured for remotely located control loops. Long pneumatic lines can be avoided by the application of field mounted controllers. Large instrument manufacturers have developed unified control systems, which have interchangeable

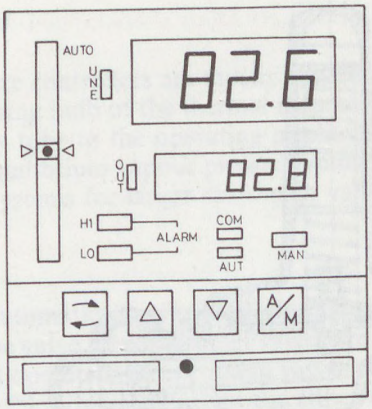


Fig. 9.11 Micro-Scan front panel (Taylor)

modules and can be used to connect all types of instruments. A unified control system called URS has been developed for the CMEA countries. Transducers serve to connect electric to pneumatic and analogue to digital subsystems. The importance of these transducers lies in the fact that the actuators, control valves in the chemical and allied industries, are operated mostly pneumatically or hydraulically.

The great advantage of these systems is that the investor (buyer) can choose freely between different items and manufacturers, even if he has a system already installed and wants to expand or replace one part. Unfortunately this is not the case with distributed digital control systems, which are all individual products (see Chapter 10). Function generators, programmers and computing relays complement the analogue control systems.

### 9.2.3 DIRECT ACTING CONTROLLERS

Direct acting or self actuated controllers do not require any external energy supply. These controllers are sometimes called regulators, and are usually control valves with a built-in mechanical controller. Direct acting controllers are generally cheap and robust instruments of limited range and flexibility. A special type of these controllers serves for refrigeration control.

Mechanical controllers are not included in modern control systems, but there are several duties which can be economically fulfilled by regulators. The types mostly used will now be described.

*1. Level controllers*

The float actuated control valve is the best-known regulator. Float actuated steam traps are widely used in the chemical industry. Level switches have to be mentioned in this group, although they need external power for signal transmission.

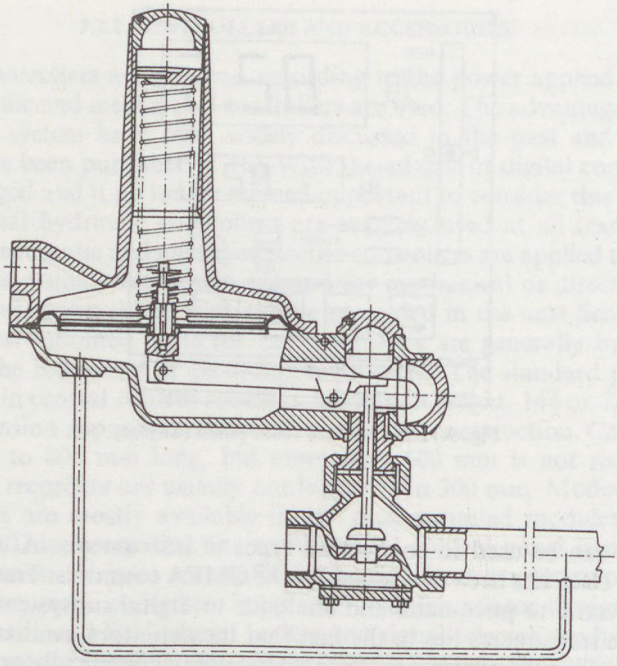

Fig. 9.12 Pressure regulator (GKVA, Hungary)

*2. Pressure regulators*

Many self-actuated pressure controllers are installed in the gas industry. A spring-loaded, diaphragm-operated control valve is the simplest pressure regulator. The line pressure operates the valve. The pilot-operated pressure regulator is a two stage device, which has an internal or external spring-actuated pilot regulator. The pilot regulator controls the pressure on the diaphragm of the main control valve.

Self-actuated regulators generally have a droop of about 10–20%, pilot-operated regulators a droop of about 2–5%. Steam pressure regulators should be preceded by a separator and a trap. Safety measures should be taken against the possibility of diaphragm rupture.

A typical pressure regulator is shown in Fig. 9.12.

*3. Flow regulators*

Some mechanical flow and mass flow regulators are available for controlling gas and liquid streams. In the chemical industry they are limited to use for small, non-critical flows. Bubbling level and density measurement, and air and water purging of impulse lines require such regulators.

*4. Temperature regulators*

Mechanical temperature controllers are mostly actuated by a manometric temperature sensor. The sensing bulb of the thermal actuator contains a liquid and is connected via a capillary tube to the operating mechanism of the control valve. Thermal expansion or equilibrium vapour pressure actuates the valve stem. There are also pilot-operated systems for larger dimension valves.

*5. Safety relief valves*

A relief valve is an automatic pressure relieving device which is actuated by pressure at the inlet of the valve. Pressure relief valves are categorized functionally as direct acting and pilot operated. Direct acting valves are closed to the set point by a weight or a spring. Pilot operated valves use either a piston or a diaphragm seal with a pilot valve which opens the pressure chamber over the sealing element and allows the inlet pressure to open the relief valve.

Both types of safety valves may operate either as a modulating or as a pop (rapidly opening) valve. The maximum set pressure of the safety valve is the maximum allowable working pressure of the equipment (MAWP). Designers usually recommend that the operating pressure should not exceed 90% of the set pressure. If the operating pressure is too close to the set pressure this may cause valve leakage, product loss, pollution and seat damage. Reset pressure is below set pressure and the difference is usually called the blowdown.

## 9.3 ANNUNCIATORS AND LOGIC CONTROL SYSTEMS

We have seen in Chapter 1 that warning and protection systems are very important components of process plant control. The special alarm systems developed for the process industries are generally called annunciators.

### 9.3.1 ANNUNCIATORS

In a process plant there are automatic devices for producing warning signals when abnormal conditions occur, and in many instances automatic shutdown of the equipment is generally applied. The oldest alarm and shutdown devices use contacts in dial instruments. Modern annunciator systems have combinations of audible warnings and signal lights, including glass panels with warning text which becomes illuminated in case of danger. They are used for the identification of the cause and source of an abnormal condition. Usually the operator has to acknowledge the warning before he tries to bring conditions back to normal. A common audible main signal may be operated and a common acknowledgement push-button may be used to silence the klaxon or loudspeaker.

The alarm sequence of a high–normal–low-type annunciator system is as follows:

— normal panel only illuminated;
— high or low value contact opens on fault, high or low panel gives flashing warning and klaxon sounds;
— operator depresses acknowledgement button, high or low panel gives steady illumination and klaxon ceases to sound;
— high or low contact closes on return to normal, normal panel only illuminated;
— circuit test can be carried out at any time, as any alarm condition overrides the circuit test.

In complicated chemical process plants the first of a group of parameters outside normal limits has to be indicated. For interlocked processes, where automatic shutdown is performed, a sequence annunciator system is required. The first signal is brought to attention by a flashing red indication, and subsequent signals will flash white. When the operator depresses the acknowledge button the audible signal is silenced and both the red and white signals change, from flashing to steady illumination. The white signals will drop out as the conditions with which they are associated return to normal. The red signal, however, will not drop out until the reset push button is depressed, to give an opportunity to log the trouble report after the operation has been returned to normal. Solid-state annunciators with graphic panels and audible alarm facilities are available.

Computer control systems, programmable logic controllers and data loggers can be used for alerting plant personnel to abnormal conditions and thus eliminate autonomous annunciators. This problem should be solved individually according to plant safety conditions and the performance of the control system.

### 9.3.2 HARDWIRED LOGIC CONTROL SYSTEMS

Simple two position (on-off) control of electric motors, lights or heaters with timing but few logic connections, is generally achieved with electromechanical starters, switches and relays. Large relay sequential control and blocking systems have been installed in the chemical industry with hundreds of electromechanical relays. Automatic control of material transport and handling systems is one of the areas where these systems are in operation. A special design aid, the ladder diagram, is used to facilitate the design of these control systems.

The development of electronics, especially the use of semiconductors, altered the scene, and transistorised logic control systems replaced the relay logic. Very complex sequential control and trip systems could be built with a limited number of logic grates (AND, OR, NOR, NAND). The TTL (transistor–transistor logic) systems were able to perform control functions with low power consumption, without moving parts and without contacts. These hardwired electronic control systems have been superseded by the more flexible freely programmable logic control systems.

The input and output interfaces of the electronic logic controllers may be equipped with electromechanical relays.

### 9.3.3 PROGRAMMABLE CONTROLLERS

The definition of a programmable controller has become muddied, although there are several definitions accepted by professional associations. One is "a digitally operating electronic apparatus which uses a programmable memory for the internal storage of instructions for implementing specific functions such as logic, sequencing, timing, counting and arithmetic to control through digital or analogue input/output modules, various types of machines and processes. A digital computer which is used to perform the functions of a programmable controller is considered to be within this scope. Excluded are drum and similar mechanical types of sequencing controllers" (NEMA).

Programmable logic controllers originated from a desire to eliminate the reworking of hardwired logic control systems each time a technological process was revised. The expression Programmable Logic Controller (PLC) is replaced by some associations with Programmable Controller (PC) to include controllers with other than logic functions. This can lead to some confusion because personal computer is also abbreviated to PC, and this nomenclature, too, has entered the process control field. Fig. 9.13 shows the principal scheme of a PLC. It can be seen that the PLC requires a separate and separable programming device. There are simple

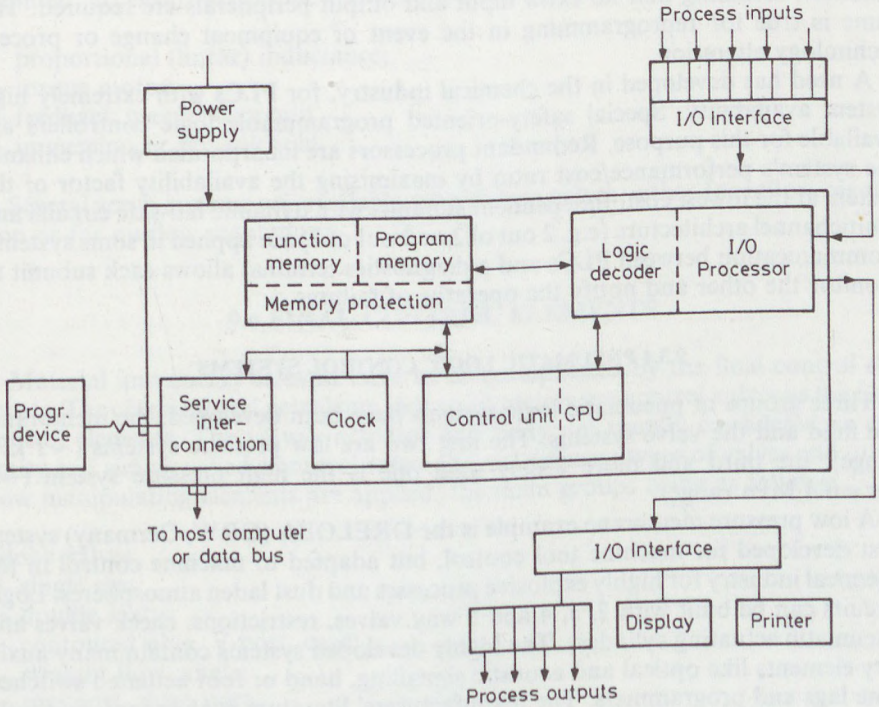


Fig. 9.13 Programmable Logic Controller (PLC)

programming devices with keyboard and LED display built in a container the size of a suitcase.

The ready availability of personal computers (PCs) made practical the use of a PC for programming the PLCs. Most PLC manufacturers have special programming languages and ready made computer programs which can be implemented on the commonly used PCs. Interfaces for connecting the PLC are also required. The programming language is usually very simple, with few instructions. Most of the manufacturers also offer ladder diagram programming. Ladder diagram logic has the advantage that plant electricians, engineers and maintenance people are familiar with it and that makes the programming and debugging of a system very easy. The great success of the PLC enhanced its further development. Distributed PLC systems with data communication are on the market. Large systems are equipped with colour VDUs for plant monitoring. It is possible to interact directly with the colour graphics display by a touch control centre for PLCs. The operator can acknowledge alarms, call up new displays, start or stop control devices connected to the PLC, and modify set points or alarm limits. PLCs can be connected to control computers and serve as front-end devices.

The rapid success of the PLC is mainly due to its flexibility. Design procedures and specifications are fast and easy. No internal wiring drawings are required. Standard equipment can be purchased with short delivery times. Last minute alterations in the logic or sequence have practically no influence on the installation schedule, assuming that no extra input and output peripherals are required. The same is true for reprogramming in the event of equipment change or process technology alteration.

A need has developed in the chemical industry, for PLCs with extremely high system availability. Special safety-oriented programmable logic controllers are available for this purpose. Redundant processors are incorporated which enhance the system's performance/cost ratio by maximising the availability factor of the system at the lowest cost. Independent subunits with dynamic fail-safe circuits and multichannel architecture (e.g. 2 out of 2 or 2 out of 3) are applied in some systems. Communication between PLCs and a diagnostics terminal allows each subunit to monitor the other and notify the operator of failures.

### 9.3.4 PNEUMATIC LOGIC CONTROL SYSTEMS

Three groups of pneumatic logic systems have been developed, the membrane, the fluid and the valve systems. The first two are low pressure systems ($\sim 1$ kPa range), the third and more widely used one is the high pressure system ($\sim 4$ bar $= 0.4$ MPa range).

A low pressure membrane example is the DRELOBA (GRW, Germany) system first developed for machine tool control, but adapted to machine control in the chemical industry for highly explosive processes and dust laden atmospheres. Logic circuits can be built with 2, 3, 4 and 5 way valves, restrictions, check valves and pneumatic actuating cylinders. The highly developed systems contain many auxiliary elements like optical and acoustic signalling, hand or foot actuated switches, time lags and programmers. The manufacturers' literature is abundant, and well-

documented catalogues are available for the design and selection of control systems [3.17], [9.15]. Pneumatic logic control is used in hazardous areas of the chemical industry. The batch control of autoclaves, start-stop and safety control of centrifuges, transport line control with pneumatically actuated diverters and several other mechanisms can be controlled by pneumatic logic systems.

In the larger systems the pneumatic logic, as such, is being replaced by electronic logic, i.e. PLCs. All major manufacturers have developed their electronic PLCs which are coupled to the pneumatic actuator system with solenoid valves. The 'muscles' are pneumatic, the 'brain' is electronic (Festo, Mecman, etc.). An example of a pneumatic logic control system is shown in Fig. 3.6.

### 9.3.5 HYDRAULIC CONTROL SYSTEMS

The hydraulic analogue controls used in earlier times have practically vanished from the chemical industry, but hydraulic actuation of the final control elements is widely used when large forces and stiffness are required. Standard ranges of hydraulic actuators are available which can be controlled by hydraulic logic. As applies for the pneumatic systems, different types of solenoid or spring actuated 2, 3, 4 and 5 way and proportional valves are produced with the necessary auxiliary elements and equipment.

When two-state logic is not sufficient and a proportional analogue signal is required, an electro-hydraulic transducer is necessary, based on

— proportional (linear) inductance;
— torque motor;
— feedback magnetic circuit;
— immersion or pot solenoid.

Several servo systems are available with sliding valves, either for inflow regulation or for outflow regulation.

## 9.4 FINAL CONTROL ELEMENTS

Material and energy streams have to be manipulated by the final control elements. The chemical and petroleum industries mainly use control valves as the final control elements. The valve's actuator and body are usually considered as one entity and simply called a control valve. Several different types of valves and other flow manipulating elements are applied, the main groups being as follows:

Globe valves
— single seat;
— double seat;
— contoured plug, V-port, cage;
— straight flow, angle;
— two port, three port.

Ball valves
— plug valves;
— eccentric disc valve;
— eccentric rotating plug (Camflex) valve.

Gate valves
— diaphragm (Saunders) valves;
— pinch valves;
— butterfly valves;
— dampers;
— fluidic valves;
— digital control valves;
— slide valve (for bulk materials);
— disc valve (for bulk materials);

Feeder devices
— table feeder (for bulk materials);
— rotary feeder (for bulk materials);
— aeration feeder (for bulk materials);
— metering pumps;
— variable speed pump drives;
and many other unique, specially designed mechanisms.

### 9.4.1 CONTROL VALVES

Proper selection and sizing of control valves is crucial for the stable, safe and economical operation of control systems. There are many mechanical, hydraulic and engineering considerations which must be evaluated in order to select a control valve. The cross-section of a conventional, pneumatically actuated control valve is shown in Fig. 9.14 for easier definition of the terms used.

Selection of body rating and connection type are the first decisions to be made. The sense of the valve's actuation can be changed in different ways. The valve body shown in Fig. 9.14*a* can be reversed and, with a reversed plug, the air-to-close valve can be transformed to an air-to-open valve. Other types do not require dismantling of the valve body, but a change of the actuator sub-assembly (Fig. 9.14*b*). If the valve is specified correctly, there is no need to change the valve action. There are three possibilities for valve action on a failure of power: it may close, open or maintain its last position.

The valve stem does not rotate but moves up and down in guides. The inner pressure is separated from the environment by packing and gaskets. The type of packing and material is of importance for reliable service. Valves without packings are required for toxic or hazardous fluids (e.g. Dowtherm), and a bellows seal is applied in most types. High temperature fluids require cooled glands, low temperature fluids need extended trim valves.

Efficient operation of a control loop depends to a great degree on the proper sizing of the control valve. Valves manipulate the fluid flow and consequently the flow characteristics have to be investigated.

The flow coefficient of a control valve is defined by IEC standard 534 as follows:

$$A_v = Q\sqrt{\frac{\varrho}{\Delta p}}, \tag{9–1}$$

$Q$ being flow rate, $\varrho$ density and $\Delta p$ pressure difference across the valve.

In industrial practice the flow coefficient first introduced by Masoneilan Co. is used. In SI units a valve flow coefficient is the flow rate in $m^3/h$ of normal temperature water (density $\varrho_w$ $kg/m^3$) through the valve when the pressure differ-

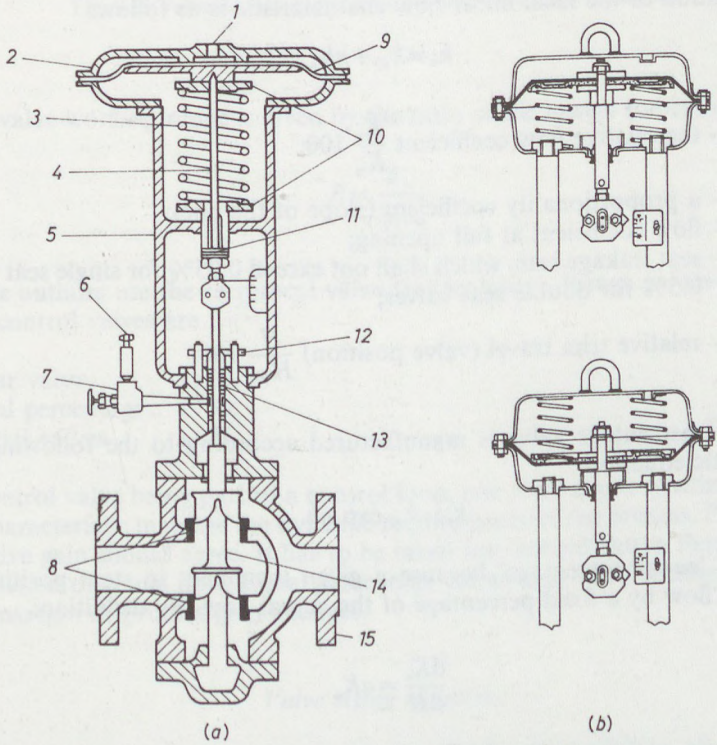


Fig. 9.14 Membrane actuated, double seat pneumatic control valve. (*a*) conventional actuator; (*b*) spring package type actuator. *1* actuating air connection; *2* actuator case; *3* spring; *4* stem; *5* bonnet; *6* lubricant screw; *7* shutoff valve; *8* valve seat; *9* diaphragm; *10* spring washer; *11* adjusting screw; *12* stuffing box; *13* packing; *14* plug (V port); *15* valve body (flanged)

ence is one bar ($\Delta p_k = 10^5$ Pa).

$$K_v = Q\sqrt{\frac{\Delta p_k}{\Delta p} \cdot \frac{\varrho}{\varrho_w}} \quad [\mathrm{m^3/h}]. \tag{9–2}$$

Originally it was defined for a 1 psi pressure difference to get US gallons per minute:

$$C_v = Q\sqrt{\frac{\varrho}{\varrho_w} \cdot \frac{1}{\Delta p}} \quad [\text{US gal/min}] \tag{9–3}$$

and the conversion is

$$K_v = 0.865\ C_v. \tag{9–4}$$

As the valve stem travel changes the flow coefficient changes according to the inherent flow characteristic. Two control valve types are used in practice, the linear flow and the equal percentage (exponential) flow valves.

The equation of the ideal linear flow characteristic is as follows

$$k_v = k_{v0} + nh, \tag{9–5}$$

where $k_v$ — the relative flow coefficient $\frac{K_v}{K_{vs}}$ 100;

$n$ — a proportionality coefficient (slope of the line);
$K_{vs}$ — flow coefficient at full opening;
$K_{v0}$ — seat leakage rate, which shall not exceed 0.05% for single seat valves, 0.5% for double seat valves;

$h$ — relative trim travel (valve position) $\frac{H}{H_{100}}$ 100.

An equal percentage valve is manufactured according to the following ideal characteristic equation:

$$k_v = k_{v0} \exp nh. \tag{9–6}$$

It is called 'equal percentage' because a given increment in stem position will change the flow by a fixed percentage of the actual flow. By definition:

$$\frac{\mathrm{d}K_v}{\mathrm{d}H} = nK_v. \tag{9–7}$$

The inherent flow characteristic curves are shown in Fig. 9.15*a* and *b*. Travel and flow changes are indicated in the diagrams at two points. In the case of rotating valves (butterfly and Camflex) the rotation angle is indicated instead of the travel.

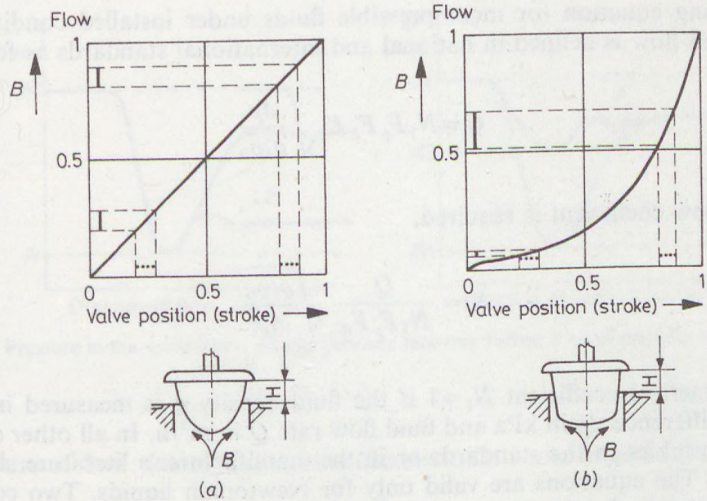


Fig. 9.15 Valve flow characteristics. (*a*) linear; (*b*) equal percentage

The valve working range is given by the ratio of the lowest stable flow and full load

$$R = \frac{k_{vr}}{k_{v100}}. \tag{9–8}$$

Some authors use the reciprocal value (rangeability). Range values of conventional control valves are

| | |
|---|---|
| linear valve | 1 : 25, |
| equal percentage | 1 : 50, |
| special valves | 1 : 75. |

The control valve being part of a control loop, one must check whether the valve flow characteristic matches the dynamic requirements of the process. Process gain and valve gain should agree. It has to be taken into consideration that valve gain is a function of actual flow. Equal percentage valves may be advantageous for the compensation of process gain changes.

### *Valve sizing equations*

Sizing equations are grouped according to fluid compressibility, and equations may be distinguished for non-choked and choked flows and for volume and mass flows. Coefficients of the equations vary according to the selected flow coefficient ($K_v$, $C_v$, $A_v$) and the units.

The sizing equation for incompressible fluids under installed conditions for non-choked flow is defined in national and international standards as follows

$$Q = N_1 F_p F_R K_v \sqrt{\frac{\Delta p}{\varrho/\varrho_0}} \tag{9–9}$$

or if the flow coefficient is required,

$$K_v = \frac{Q}{N_1 F_p F_R} \sqrt{\frac{\varrho/\varrho_0}{\Delta p}}. \tag{9–10}$$

The numerical coefficient $N_1 = 1$ if the fluid density $\varrho$ is measured in kg/m$^3$, pressure difference $\Delta p$ in kPa and fluid flow rate $Q$ in m$^3$/h. In all other cases the conversion tables in the standards or in the manufacturer's literature should be consulted. The equations are valid only for Newtonian liquids. Two correcting factors appear in the above equations which are not found in earlier publications.

The piping geometry factor $F_p$ is necessary to account for fittings attached to the control valve body. Its value is the ratio of the flow rate through a control valve with attached fittings to the flow rate without attached fittings. Consequently it is unity if the valve is installed without fittings. The valve bore may be smaller than the pipe diameter so that a reducer and expander have to be installed. These fittings will change the flow through the control valve and this is represented by the correction factor $F_p$.

The Reynolds number $F_R$ compensates for non-turbulent flow conditions. If high viscosity, low pressure difference or small dimensions result in a small Reynolds number and laminar flow, this affects the flow coefficient. The value of factor $F_R$

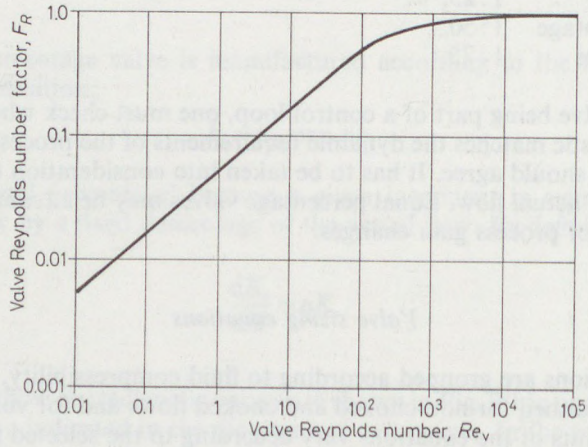


Fig. 9.16 Viscosity correction diagram

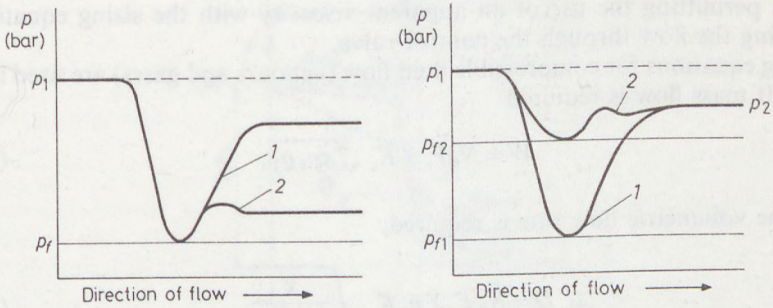


Fig. 9.17 Pressure in the valve body. *1* large pressure recovery factor; *2* small pressure recovery factor

is the ratio of flow rate in laminar conditions to flow rate in turbulent conditions

$$F_R = \frac{Q_{\text{laminar}}}{Q_{\text{turbulent}}}. \tag{9–11}$$

If there are no measured values, the correction factor can be calculated with the aid of the diagram in Fig. 9.16.

With increasing pressure difference across a control valve, especially if the fluid temperature is high, vaporisation within the valve may occur and choked flow will result. Choked flow is a limiting flow condition. The sizing equation for choked flow, without fittings, is

$$Q_{\max} = N_1 F_L F_R K_v \sqrt{\frac{p_1 - F_F p_v}{\varrho/\varrho_0}}, \tag{9–12}$$

where $F_L$ is the liquid pressure recovery factor which takes account of the internal geometry of the control valve. $F_{LP}$ will be used with the attached fittings. Here $F_F$ is the liquid critical pressure ratio, which depends on the vapour pressure of the liquid at the inlet temperature and the 'vena contracta' pressure in choked flow conditions.

In order to give the reader a better understanding of the physical phenomena inside the valve body, two diagrams are shown in Fig. 9.17. Pressure is decreasing inside the valve to the vena contracta where the highest flow velocity occurs, and then begins to rise as a function of the internal valve geometry. Inside the valve, with a small pressure recovery (line 2), the difference between inlet pressure and vena contracta pressure is small, and no vaporisation occurs if the vapour pressure of the liquid is less than $p_{f2}$. In the high pressure recovery valve (line 1) a large pressure difference will occur, which results in low vena contracta pressure and this may cause vaporisation if the vapour pressure is higher than $p_{f1}$. The first diagram shows free outflow, the second shows fixed outflow pressure.

Non-Newtonian liquids, having exceptional viscosity characteristics, are generally excluded from standard valve sizing procedures. Several types have charac-

teristics permitting the use of an apparent viscosity with the sizing equation in estimating the flow through the control valve.

Sizing equations for compressible fluid flow (vapours and gases) are used in two forms. If mass flow is required

$$W = N_6 F_p Y K_v \sqrt{x p_1 \varrho_1}, \tag{9–13}$$

or, if the volumetric flow rate is required,

$$Q = N_9 F_p Y p_1 K_v \sqrt{\frac{x}{MTZ}}, \tag{9–14}$$

where $x$ — the ratio of the pressure difference across the valve to the inlet pressure

$$x = \frac{\Delta p}{p_1};$$

$T$ — inlet temperature;
$F_p$ — piping geometry factor;
$Y$ — expansion factor;
$Z$ — compressibility factor;
$M$ — molecular mass.

Values of the numerical constants are $N_6 = 3.16$ and $N_9 = 24.6$ if pressure is measured in kPa, density in kg/m$^3$, $W$ in kg/h, and $Q$ in m$^3$/h. The expansion factor $Y$ accounts for the change in density inside the valve. To find the value of $Y$, the ratio of the specific heats of the fluid $F_r$ has to be known (for air it is 1.4). The compressibility factor $Z$ applies for high pressures when the real gas deviates markedly from the ideal. Critical pressures and other thermodynamic data for most fluids can be found in reference handbooks of physical data or in computer databases. The limiting value of $x$ is defined as the critical pressure ratio. Calculation details, tables of numerical values and diagrams can be found in the standards (e.g. IEC 534).

*Valve characteristics under installed conditions*

In a chemical plant the control valves are installed in pipe networks and form part of a hydraulic system. Fluid flow and pressure drop are not independent parameters. Control valves operate under changing conditions and the plant flow characteristic is not identical with the inherent flow characteristic. The available pressure drop $\Delta p_0$ in a hydraulic system can be divided into two parts, the pressure drop $\Delta p_v$ across the control valve and the pressure drop $\Delta p_p$ of the rest of the piping with fittings, equipment, etc. Pressures relative to the pipeline are shown in Fig. 9.18 for an assumed constant pressure source. When the control valve is closed, the whole of the pressure difference is exerted across the control valve and there is no flow. Opening the valve will result in an increasing flow rate and pressure drop in the pipe. This has the consequence of decreasing the pressure difference across the

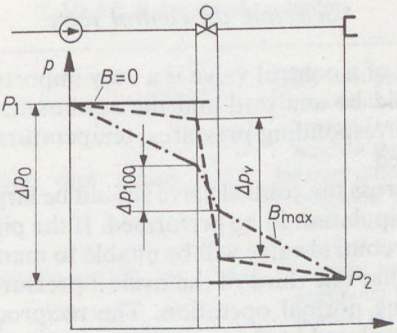


Fig. 9.18 Flow rates and pressure differences in the pipe. $P_1$ inlet pressure; $P_2$ outflow pressure; $B$ flow; $p_0$ total pressure difference; $p_v$ pressure difference across the valve

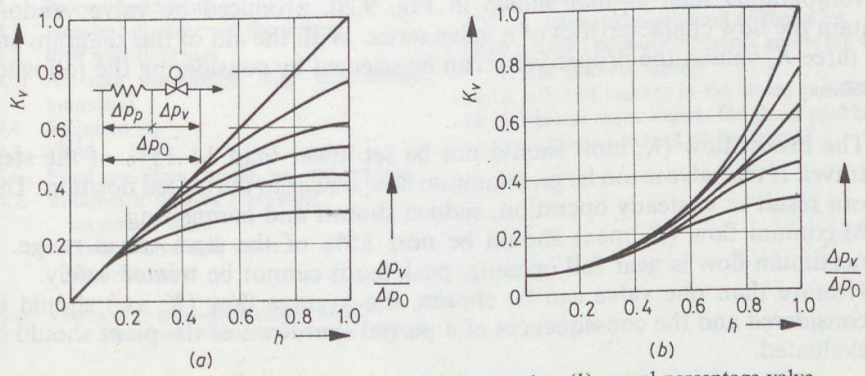


Fig. 9.19 Plant flow characteristics. (*a*) linear valve; (*b*) equal percentage valve

control valve. With the valve fully open, maximum flow is associated with minimum pressure drop. With a load dependent pressure source (e.g. a pump), the relationships are only slightly different.

The plant flow characteristics can be calculated and conveniently presented using a parameter which is the ratio of the pressure drop across the valve to the available pressure drop:

$$\frac{\Delta p_v}{\Delta p_0}.$$

The value of this parameter is 1 for the inherent flow characteristic. Fig. 9.19 shows plant flow characteristics for linear *(a)* and for equal percentage *(b)* control valves. Other types of relative flow coefficients are also known.

The proper selection of a control valve is a very important task in design work. The process data should be analysed and the minimum, maximum and average fluid flows, with the corresponding pressures, temperatures, densities and viscosities, have to be collected.

The pressure drop across the control valve should be large enough to enable well defined and stable manipulation to be performed. If the pipe absorbs the available pressure difference, the control valve will be unable to manipulate the flow. It used to be a rule of thumb that one third of the overall pressure drop should be across the control valve during normal operation. The reciprocating stem globe body control valve is being replaced in many applications by rotary type valves. Using a low pressure loss rotary valve, the pressure drop can be as low as 6–10% of the total available head. Process control valves have to meet the energy costs challenge [9.3]. With the set of three parameter groups, three values of flow coefficient can be calculated. (Several computer programs for valve sizing are available, some from the valve manufacturers.)

Nomographs such as that shown in Fig. 9.20, produced by valve vendors, contain the flow characteristics of a valve series. With the aid of this diagram and the three $K_v$ values, the proper valve can be selected by considering the following rules:

— The lowest flow ($K_v$ min) should not be set lower than 14–15% of the stem travel. If the valve is too large, minimum flow is near to the closed position. This can result in unsteady operation, sudden shutoff and hammering.
— Maximum flow ($K_v$ max) should be near 85% of the stem travel range. If maximum flow is near full opening, peak loads cannot be treated safely.
— If more than one valve can be chosen, the average flow ($K_v$ av.) should be considered and the consequences of a partial shutdown of the plant should be evaluated.

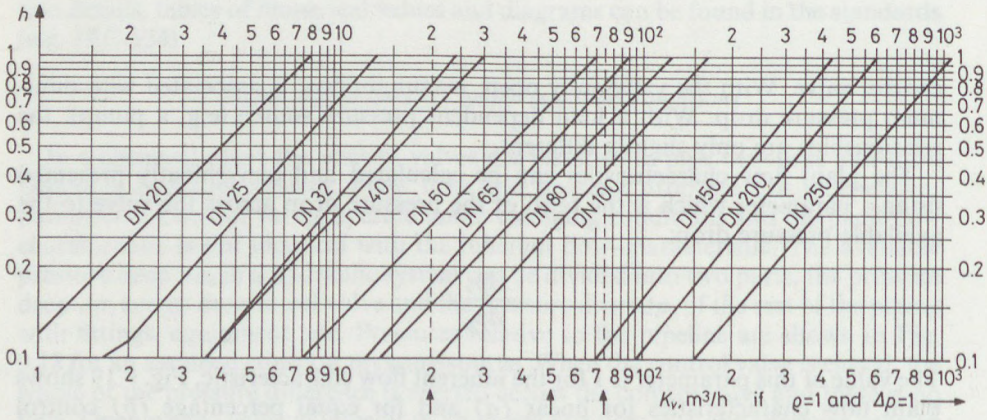


Fig. 9.20 Valve sizing nomograph

Table 9.2. Valve specification data

1. Tag number
2. End connections (ND, NP, flange, butt-welded end, gasket)
3. Type
4. Flow characteristic (linear, equal percentage)
5. Body material
6. Seat material
7. Actuating power (pneumatic, electric, hydraulic)
8. Actuating signal range
9. Actuation (direct, reverse)
10. Action on power failure (open, close, stay)
11. Positioner and/or limit switch (yes, no)
11.1. Bypass (yes, no)
11.2. Local indication (pressure, electric current)
12. Fittings
13. Hand wheel (manual actuation)
14. Process conditions:
14.1. Nominal diameter of the pipe
14.2. Pipe wall thickness
14.3. Ambient conditions (e.g. temperature, humidity)
14.4. Required $K_v$
14.5. Fluid
14.6. Fluid condition (liquid, gas, two phase)
14.7. Volumetric flow or mass flow
maximum value
normal (average) value
smallest value
14.8. Body inlet pressure at
maximum flow
normal (average) flow
smallest flow
14.9. Pressure difference across the valve at
maximum flow
normal (average) flow
smallest flow
14.10. Fluid inlet temperature
maximum value
normal (average) value
lowest value
14.11. Saturation pressure at normal inlet temperature
14.12. Density at normal inlet temperature (and pressure)
14.13. Viscosity at normal inlet temperature
14.14. Noise level
maximum allowed level
estimated noise level of the valve
14.15. Largest pressure difference across the valve (for actuator sizing)
14.16. Allowed leakage in the closed position
14.17. Special requirements for gland packing
14.18. Explosion hazard or fire hazard

*Remark:* a sketch of the installation is usually required.
(After Hungarian Recommended Practice MI 14020/4)

The requirements of any future plant enlargement can be taken into consideration by installing a larger control valve with a restricted seat (e.g. with a factor 0.4). Several valve manufacturers offer such alternatives. The selected control valve has to be exactly specified on a specification sheet.* In Table 9.2 a standard control valve specification sheet is presented. Most questions are self-explanatory, only a few remarks seem necessary.

— Action in the case of failure should be selected to ensure safety. Fuel lines have to be closed, cooling water lines can be opened, etc.
— Valve positioners should be specified in the following cases:
  — average pressure drop across the valve exceeds 15 bar;
  — vapourisation may begin inside the valve;
  — inlet pressure exceeds 25 bar;

* There are several forms of data sheets (e.g. ISA dS 20(22)50 Jan. 1986. Instructions for control valve data (sheet).

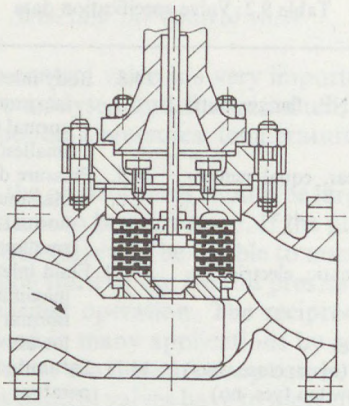

Fig. 9.21 Control valve with silencer

— long packing glands;
— crystallisation or sedimentation hazard;
— valve ND exceeds 150;
— split range control;
— actuating pressure is not equal to controller output pressure;
— electronic controller, pneumatic or hydraulic actuator;
— pneumatic control with signal lines exceeding 150 m length;
— averaging level control;
— bypass valves for compressors.

Noise level is regulated in most countries and the prescribed level is found in national codes. Generally a 90 dBA noise level is allowed at 1 m distance from the control valve. Noise is generated by mechanical vibration and cavitation, but aerodynamic noise is the most serious problem to be solved. Energy transformation in the valve is accompanied by sound generation. Noise levels in a control valve are very sensitive to the geometry of the flow path. Special silent valves are produced with silencer inserts which dissipate energy without sound generation. Other valves have special multiple expansion trims to reduce acoustic energy generation. Fig. 9.21 shows a silent valve construction. Noise is generated in the downstream pipe, too, due to high flow velocities. Treatment of the path can be used effectively to control aerodynamic noise. Acoustic insulation and silencers can also be used.

### 9.4.2 TYPES OF FINAL CONTROL ELEMENT

The conventional double seat pneumatic control valve shown in Fig. 9.14 has several drawbacks, and this fact inspired the valve manufacturers to develop other types of control valve. One problem to be solved is leak tight closing.

Special single seat valves and eccentric discs with fire safe seats are available. Ball valves and diaphragm valves (Saunders type) are produced in great variety. A low

noise special ball valve with perforated plates is shown in Fig. 9.22. To achieve size and weight reduction special rotating stem valves have been developed, one example of which is shown in Fig. 9.23. Many control schemes require three-port valves. Fig. 9.24 shows two types, one for mixing *(a)* and one for dividing *(b)* fluid streams. Large diameter globe valves become extremely heavy and expensive, and therefore the use of butterfly and gate valves is recommended. Butterfly valves offer a very cost effective way of modulating the flow of liquids and gases, but there are some disadvantages. The low pressure loss leads to high noise and a tendency to cavitate with liquids. A toothed shape enables the vane to effectively throttle with lower pressure recovery by creating separate fluid streams (e.g. Gyro-vane, Worcester controls). A special butterfly contour in Fig. 9.25 shows noise reducing and throttle stabilising teeth. Fig. 9.26 shows butterfly valves and Fig. 9.27 shows a special sliding piston gate valve for large pipe diameters (up to 1200 mm).

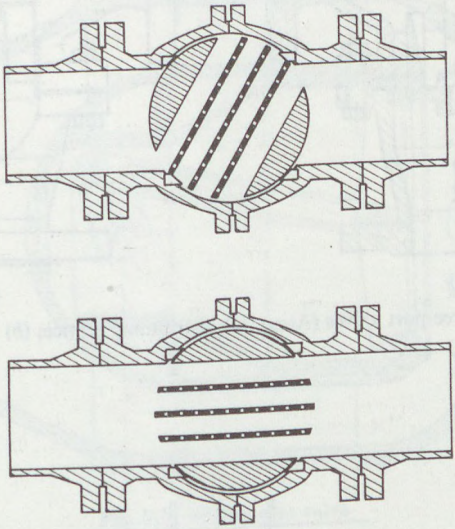

Fig. 9.22 Q-ball valve (Neles)

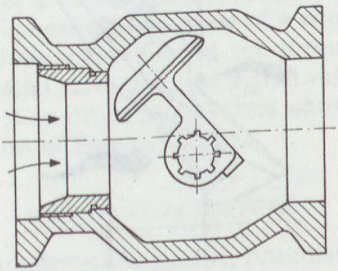

Fig. 9.23 Rotating vane valve (e.g. Camflex, Masoneilan)

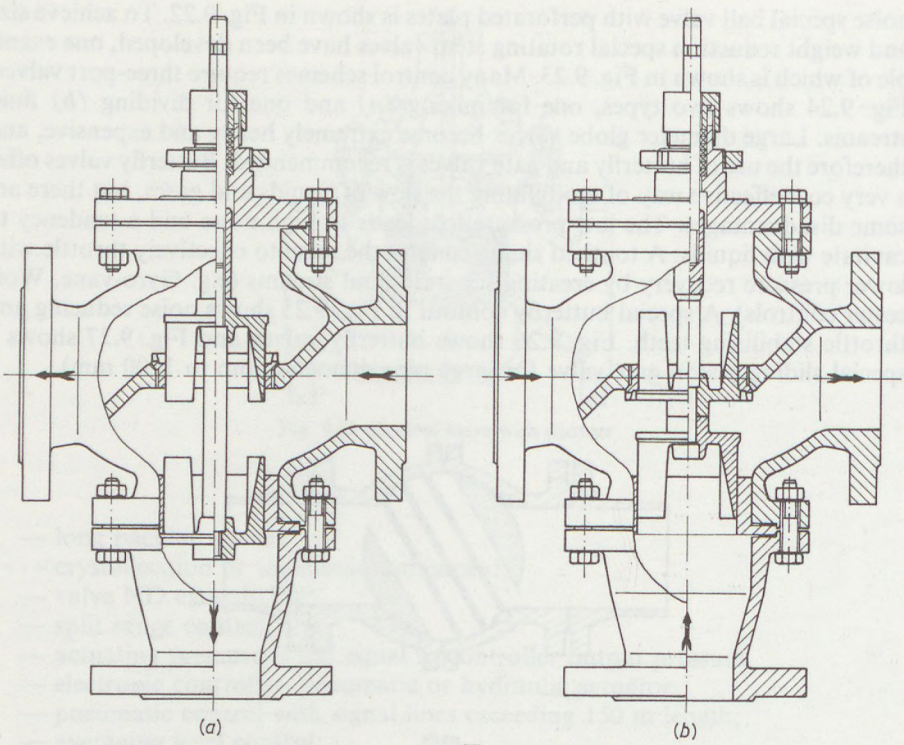


Fig. 9.24 Three port valves (Arca). (*a*) distributing service; (*b*) mixing service

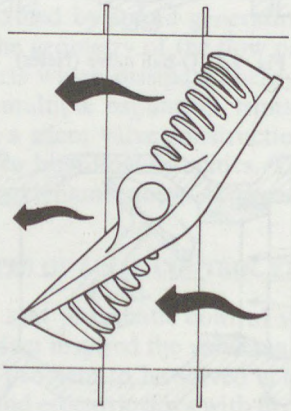

Fig. 9.25 Baumann butterfly valve contour

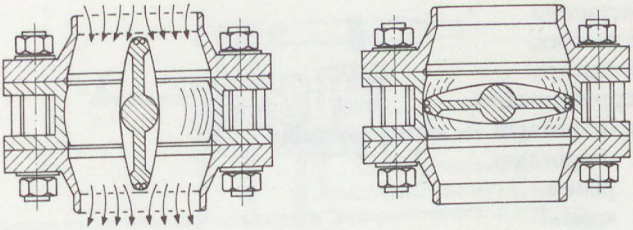

Fig. 9.26 Butterfly valve

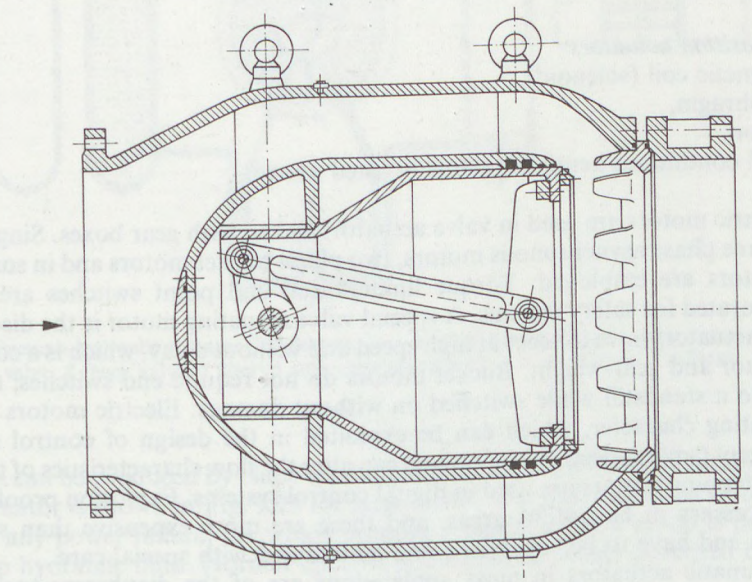

Fig. 9.27 Sliding gate valve

Flow characteristic curves are available from the control valve manufacturers. The originally unfavourable flow characteristic of a conventional butterfly valve has been changed by various measures and the torque requirements are also modified. Finally a very special valve type, the digital valve, should be mentioned. Digital valves are clusters of on-off solenoid valves whose cross-sections are sized to form binary combinations of flow capacity.

### 9.4.3 VALVE ACTUATORS

Final control elements are driven by electric, pneumatic or hydraulic actuators (motors). Actuators can be grouped as follows:

*Continuous actuators*
electric dc motors,
ac motors,
stepping motors,
pneumatic diaphragm — spring assembly
diaphragm,
piston,
special
hydraulic piston
blade,
special,
hand wheel.

*Two position actuators*
magnetic coil (solenoid),
diaphragm,
piston,
and all continuous actuators (already listed above).

Electric motors are used in valve actuators linked with gear boxes. Single phase and three phase asynchronous motors, two phase bucket motors and in some cases dc motors are employed. Torque limiters and end point switches are usually incorporated for safety reasons. A special valve actuating motor is the disc motor. Valve actuators have to react at high speed and without delay, which is a constraint on motor and gear weight. Bucket motors do not require end switches; they can come to a standstill while switched on without damage. Electric motors have an integrating character, which can be exploited in the design of control systems. Intelligent (smart) electronic actuators can alter the flow characteristics of the valve [9.6]. Stepping motors are used in digital control systems. Explosion proof motors are necessary in hazardous areas, and these are more expensive than standard motors and have to be supervised and maintained with special care.

Pneumatic actuators in most applications are of the diaphragm-spring type shown in Fig. 9.14. These actuators are simple, relatively cheap, robust and explosion proof. Spring packs are often used instead of one spring to save space and give an extra safety margin. Easy change of the sense of action is provided in modern actuators. Piston type actuators are used for on-off service and for greater force. Pistons with spring and with pneumatic loading are used. When the actuating pressure is higher than the standard controller pressure, booster relays or servo valves are required. Pistons for continuous positioning need positioners. Special pneumatic actuators for rotating motion are the stepper motor and blade type actuator (Kinetrol) for butterfly valves, plug valves, etc. Pressure changes in pneumatic actuators are accompanied by changes in volume. This causes an actuator to move at a velocity limited by the maximum rate of air flow. Lubricators, noise silencers and damping elements are parts of pneumatic control systems.

Hydraulic actuators are used if large forces and stiffness are required. Linear motion is achieved by simple pistons and rotating motion by crankshafts or by hydraulic motors. Limited angular rotations for plugs or butterfly valves and

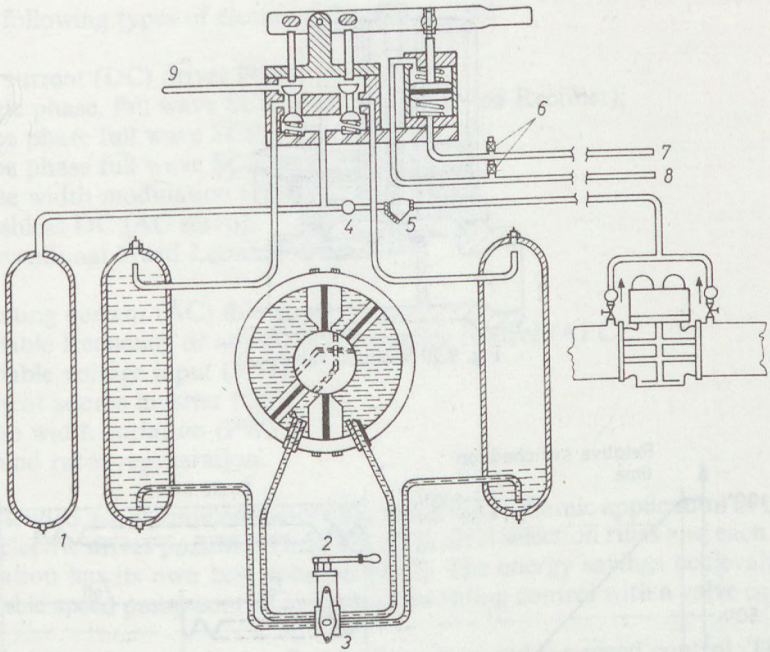


Fig. 9.28 Pneumo-hydraulic actuator (Bradshaw). *1* compressed gas receiver; *2* hand pump; *3* reversing valve; *4* check valve; *5* filter; *6* adjustable restrictions; *7* close; *8* open; *9* exhaust

dampers can be produced by blade type actuators. A special blade or rotary piston type actuator is shown in Fig. 9.28 for large valves. The valve must be actuated in spite of any power failure, for which purpose a hand actuated pump is provided to pump hydraulic fluid. Normal operation is by line pressure governed by pilot solenoid valves.

The magnetic coil or solenoid valve is the actuator most commonly used for two position control. Solenoid valves are mass produced for on-off control. The valve stem has a ferrite core which is drawn into the coil when it is energised. With the current switched off, the spring-loaded stem falls down. Larger valves or high pressure valves would need very large coils, and to avoid this servo valves have been developed which use fluid pressure for actuating a membrane. The working principle of this type is shown in Fig. 9.29.

Actuators are applied not only to valves but also to electric circuit breakers, motor starters and other final control elements. Actuators and final control elements are usually designed and assembled by the vendor of the control system or of the control valve. This is why selection of the proper actuator for a given valve body or electric switch is not explained in this book. From the standpoint of the application engineer a control valve together with its actuator forms one unit.

The electric current can be manipulated by a thyristor controller. The actuator and the final control element can scarcely be separated in these devices. A well-

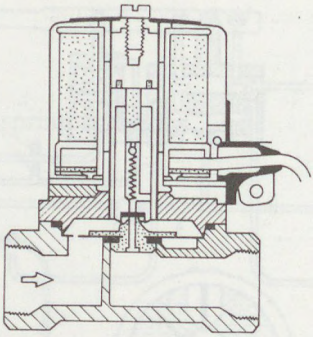

Fig. 9.29 Solenoid valve

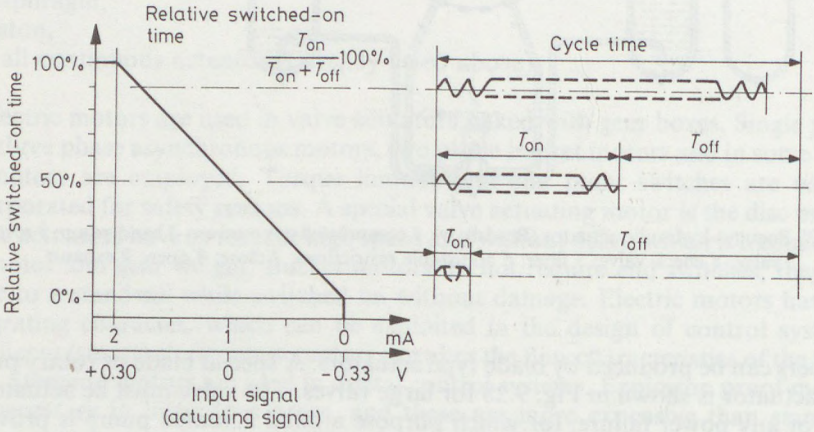


Fig. 9.30 Thyristor control mode

known control mode is to change the number of cycles of the ac source. This means a semicontinuous manipulation of the energy flow. Fig. 9.30 shows how the control signal and the relative switched-on period are related, and also shows cycle times in three different positions. Single phase and three phase controllers are available. Such final control elements and actuators are used in temperature control loops for plastic moulding machines.

### 9.4.4 VARIABLE SPEED DRIVES

The interest in variable speed drives is increasing as the cost of energy escalates. Variable speed drives can be classified as electrical, hydraulic or mechanical. Process control generally requires stepless speed variation, and therefore the use of two-speed (pole-switching) motors and gearboxes is very limited.

The following types of electrical drives are used:

Direct current (DC) drives [9.4]:
— single phase, full wave SCR (Silicon Controlled Rectifier);
— three phase full wave SCR;
— three phase full wave SCR power bridge;
— pulse width modulation (PWM);
— brushless DC (AC servo);
— conventional Ward-Leonard drive.

Alternating current (AC) drives
— variable frequency or adjustable frequency control (AFC);
— variable voltage input (VVI);
— current source inverter (CSI);
— pulse width variation (PWV);
— wound rotor regeneration.

The extended use of semiconductors has made the economic application of variable speed electric drives possible. There are no general selection rules and each type of application has its own best solution [9.12]. The energy savings achievable with adjustable speed pump control as against throttling control with a valve can reach 40%.

Hydraulic drives and hydraulic couplings are used for speed control. The variable speed hydraulic motor is driven by fluid pressure. Fluid couplings consist of two halves, one driven by a constant speed electric motor and the other connected to the driven equipment (e.g. pump). Speed is regulated by manipulating the fluid flow between the two halves. Hydroviscous drives have one or more disc assemblies with driven and driving members which are pressed together by fluid pressure. Such a drive is a slipping type of device. Mechanical systems can be installed between the constant speed electric motor and the driven machine. A drive comprising two conical pulleys with a V-belt represents one well-established solution, and two-cone friction drives are applied as well.

### 9.4.5 VALVE POSITIONERS

The movement and position of the final control elements have to be supervised or controlled. The auxiliary device connected to the valve to control its position exactly, according to the commands of the controller, is called the valve positioner.

A valve positioner has a displacement detector and an amplifier controller. It compares the controller output with the actual valve position and tries to eliminate the difference. In the case of a pneumatic actuator, the valve positioner serves as a pressure or power amplifier and puts pressure on the membrane or cylinder of the actuator to move the valve plug to the exact position required by the controller. Fig. 9.31 shows a pneumatic valve positioner. This type has a profiled cam to correct the valve characteristics. The position of the valve stem is connected

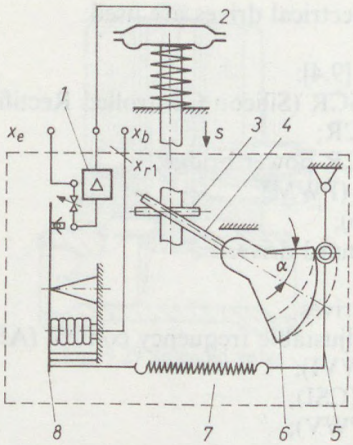


Fig. 9.31 Pneumatic valve positioner (GRW). *1* power amplifier; *2* actuator motor; *3* stem; *4* lever; *5* follower with roller; *6* cam; *7* spring; *8* beam of the amplifier

through a lever, a cam and follower to the force balancing amplifier. The signal from the controller acts on the same amplifier arm through a bellows. According to the difference of the two forces exerted on this arm, the pneumatic amplifier is energised and the pressure above the membrane of the valve actuator is changed. If the actual valve position is not equal to the control signal, the amplifier modifies the pressure until equilibrium is reached.

Split-range control can be set on the valve positioner. For electronic controllers and pneumatic control valves, electropneumatic valve positioners are used. In hazardous areas, intrinsically safe electropneumatic positioners are required. Electronic analogue and digital signals may be applied for control. Different types of positioners are available for steady and for intermittent control signals. Valve position transmitters are used in telemechanical systems to provide information and feedback from the movement of the final control elements.

## REFERENCES


[9.1] Auslander, D. M.: *Microprocessors for Measurement and Control.* Osborne, McGraw-Hill, Berkeley, 1982.

[9.2] Babb, M.: *Control Eng.* 35 (9), (1988) 110.

[9.3] Bailey, S. J.: *Control Eng.* 28 (3), (1981) 56.

[9.3a] Barney, G. C.: *Intelligent Instrumentation, Microprocessor Applications in Measurement Control.* 2nd ed. Prentice Hall Int., 1988.

[9.4] Bartos, F. J.: *Control Eng.* 36 (6), (1989) 80.

[9.5] Bergveld, P.: *Biosensors* 2 (1), (1983) 15.

[9.6] Blickley, G. J.: *Control Eng.* 37 (1), (1990) 74.

[9.7] Briggs, R.: *Meas. Control* 22 (6), (1989).

[9.8] Clegg, I. M.: *Meas. Control* 22 (4), (1989) 102.

[9.9] Demorest, W. J.: *Instrum. Control Syst.* 56 (5), (1983) 61.

[9.10] Hengstenberg, J. and co-workers: *Messen, Steuern und Regeln in der Chemischen Technik* (3rd ed.) Vols I—IV. Springer, Berlin 1980–1983.
[9.11] Huskins, D. J.: *General Handbook of on-line Process Analysers*. J. Wiley, Chichester 1982.
[9.12] Hall, J.: *Instrum. Control Syst.* 55 (9), (1982) 28.
[9.13] Marx, W. R.: *MPA* (1988) 250.
[9.14] Norton, H. N.: *Sensor and Analyser Handbook*. Prentice-Hall, Englewood-Cliffs 1982.
[9.14a] Pitt, M. J., P. E. Preece (Eds): *Instrumentation and Automation in Process Control*. Ellis Horwood Ltd, Chichester 1990.
[9.15] Rohner, P.: *Fluid Power Logic Circuit Design*. Macmillan Press, London 1979.
[9.16] Strohrmann, G.: *Einführung in die Messtechnik im Chemiebetrieb*. (2nd ed.) Oldenburg, Munich 1983.
[9.17] Taylor, J. C.: *Meas. Control* 20 (10), (1987) 88/145.

CHAPTER 10

# COMPUTER CONTROL

## 10.1 COMPUTER APPLICATION — FUNDAMENTALS

Computers are used for a variety of purposes in the chemical industry, one of these being computer control. Because there are many interactions between various applications and because modern network techniques allow the integration of several tasks, a general description of such applications may be useful.

### 10.1.1 COMPUTERS IN THE CHEMICAL PROCESS INDUSTRY

In a large chemical or petrochemical plant computers are used in several places throughout the operation. The main groups of applications are shown in Table 10.1. Computer and microprocessor applications in data acquisition and process control will be described in the following. The initial phase of process control with computers was characterised by the use of general purpose central mainframe

Table 10.1. Computer applications in the chemical industry

1. Research
1.1 Computing reaction kinetics
1.2 Calculating reaction equilibria
1.3 Evaluating analytical measurements, chemometrics
1.4 Molecular structure calculations
1.5 Effect-mechanism data base
1.6 Biometrics
1.7 Bibliography, documentation
1.8 Physical property data bases

2. Development, engineering
2.1 Computing process data
2.2 CAD of chemical equipment and facilities
2.3 CAD of process plant, flowsheeting
2.4 Chemical synthesis design
2.5 Modelling, simulation
2.6 CAD of process control (CACSD)
2.7 Product development with statistical methods
2.8 Design and investment planning (CPM, PERT)

3. Process plant management
3.1 Data acquisition and processing, data logging
3.2 Process control and monitoring
3.3 Process management system
3.4 Process optimisation
3.5 Product demand forecasting
3.6 Warehouse and delivery automation
3.7 Safety system (ESD: emergency shutdown)

4. Product quality and production control
4.1 Production planning
4.2 Energy and materials network control
4.3 Optimal charge and recipe computation
4.4 Quality control with statistical methods (SPC; CAQ)
4.5 Laboratory automation, experiment automation (LIMS)
4.6 Maintenance management
4.7 Inventory control
4.8 GMP and GLP documentation

5. Business and office automation (not detailed here)
6. Training
6.1 Programmed learning
6.2 Operator trainer systems
6.3 Postgraduate and factory-specific training

computers. Their poor adaptability to serve practical operational conditions, plus the limited experience of users and manufacturers, led to considerable difficulties and to a limited number of applications. Minicomputers and microcomputers opened new phases of development which are decisively influenced by the advances in IC technology, such as the appearance of LSI and VLSI chips and equipment. Functional and spatial decentralisation became feasible, and the use of microprocessors and microcomputers is now generally accepted. Despite all the achievements in microelectronics and computer science, control engineers and process engineers have to bear in mind that computerisation is not equivalent to automation.

### 10.1.2 COUPLING PROCESS AND COMPUTER

Methods of control computer application have passed through several phases of development. To provide the reader with a clear picture of coupling methods between process and control computer, Fig. 10.1 shows the principles of applications.

Process parameters measured by sensors and transmitters are collected by a data acquisition system (formerly called a 'data logger'). The recorded data form the inputs of a general purpose computer which computes the optimum process values and thus the reference values (setpoints) of the autonomous controllers. The process operator is guided by the output of the computer and manually corrects the process parameters. This method, shown in Fig. 10.1*a*, is called 'off line' because the computer is not connected to the process and can be sited and operated remotely. This method is outdated and off-line computation is used only at higher (e.g. company) levels. In the following phase, signal lines from the sensors and transmitters are directly connected to the input interface of the computer. The dedicated computer serving for data acquisition and data processing guides the process operator in supervising and control of the process (alarm functions can be incorporated). In spatially distributed large systems special SCADA (Supervisory Control And Data Acquisition) systems are installed. This method is called 'on-line open loop' control because the computer control loop is not closed i.e. the computation results are fed back only through the process operator, as illustrated in Fig. 10.1*b*. The control loops can be closed through the computer if an appropriate output interface is provided. The process control computer is connected to the sensors and transmitters on one side and to the controllers on the other side. The analogue controllers are autonomous, but their reference values (setpoints) are set by the computer. This on-line closed loop method is called Supervisory Digital Control (SDC) or Set Point Control (SPC). Controllers require remote setpoint devices with auto-manual-computer switches. The expression Supervisory Computer Control (SCC) is found in some publications. Figure 10.1*c* outlines this control method.

The next step followed logically from the idea that controller performance could be computed by the computer and thus eliminate the use of analogue controllers. This final step involves an essential difference from the previous methods, in that parallel computation is changed to sequential computation. The control loops are switched and the control actions are computed one after the other by the computer. This method is called Direct Digital Control (DDC) and is shown in Fig. 10.1*d*.

Input and output are directly connected to the control computer, from sensors to final control elements. Appropriate interfaces with appropriate (e.g. AD and DA) converters are required in the hardware, and powerful, reliable and convenient control programs are required for the software. DDC was not very popular in the chemical and allied industries. Modest reliability figures and high installation costs (partly due to the necessary analogue back-up instrumentation) prevented this method becoming popular.

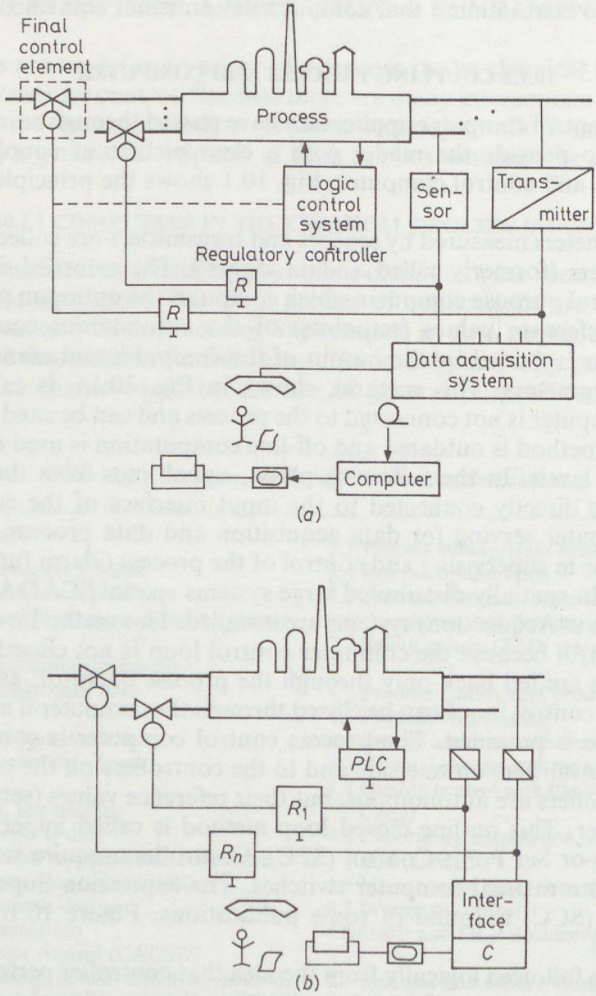


Fig. 10.1 Connection possibilities of process and control computer. (*a*) off-line open loop control. *R* regulating controller; (*b*) on-line open loop control; (*c*) Supervisory Digital Control (SDC) or Set Point Control (SPC); (*d*) Direct Digital Control (DDC); (*e*) Distributed Control System (DCS). *C* computer; *I* process input interface; *O* process output interface; $\mu P$ microprocessor based distributed controllers

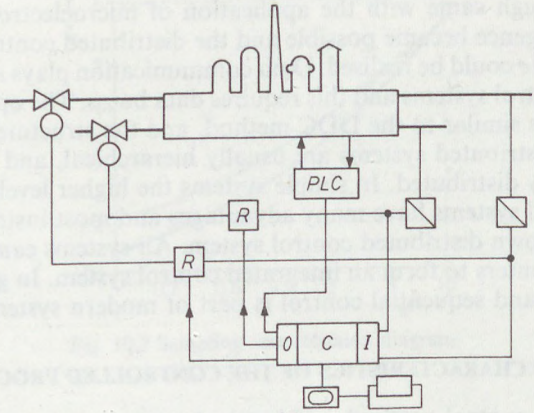


(c)

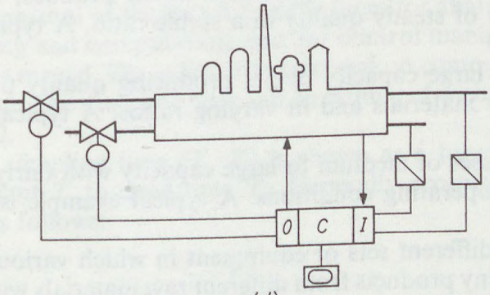


(d)

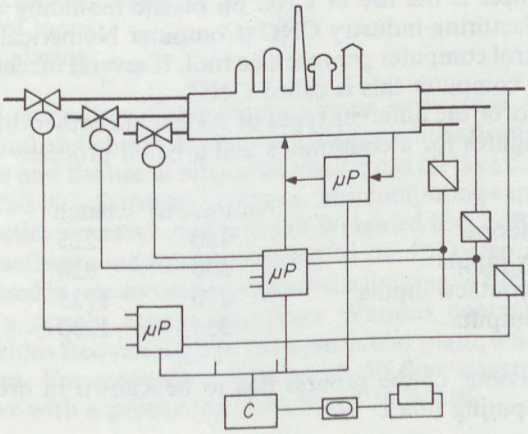


(e)

The breakthrough came with the application of microelectronics. The use of distributed intelligence became possible and the distributed control system (DCS) shown in Fig. 10.1*e* could be realised. Data communication plays an important role in distributed control systems and this requires data buses. The operating principle is digital, which is similar to the DDC method, and the structure is similar to the SDC method. Distributed systems are usually hierarchical, and hierarchical systems are generally distributed. In simple systems the higher levels can be omitted [10.2]. Distributed systems have many advantages and most instrument manufacturers have their own distributed control system. All systems can be connected to central host computers to form an integrated control system. In general PLCs can be incorporated, and sequential control is part of modern systems.

### 10.1.3 CHARACTERISTICS OF THE CONTROLLED PROCESS

Selection of a control method and control system depends on the process characteristics. From this point of view four groups can be distinguished as follows:

(*i*) Continuous, large capacity processes which produce, from uniform raw materials, products of steady quality in a stable ratio. A typical example is ammonia production.

(*ii*) Continuous, large capacity plants producing quality products of varying from changing raw materials and in varying ratios. A typical example is an oil refinery.

(*iii*) Batch processes of medium to large capacity with fairly complex relationships and varying operating conditions. A typical example is polymerisation of plastic materials.

(*iv*) Plants with different sets of equipment in which various processes can be used to produce many products from different raw materials with a capacity which may vary in time. A typical example is the pharmaceutical industry.

(*v*) Plastics processing could be mentioned as a fifth group; it is partly a mechanical process, and methods developed for mechanical engineering can be adapted. A typical example is the use of CNC on plastic moulding machines. In the mechanical manufacturing industry CNC (Computer Numerical Control) means the use of one control computer per machine tool. If several machines are operated under one control computer this is called DNC.

The requirements of the different types of system are rather different, as shown by the following figures for a continuous and a batch process:

| | continuous | batch |
|---|---|---|
| No. of control loops | 180 | 225 |
| No. of analogue inputs | 530 | 620 |
| No. of digital (contact) inputs | 210 | 1725 |
| No. of digital outputs | 355 | 1300 |

The dynamic behaviour of the process has to be known in order to determine sampling and computing times.

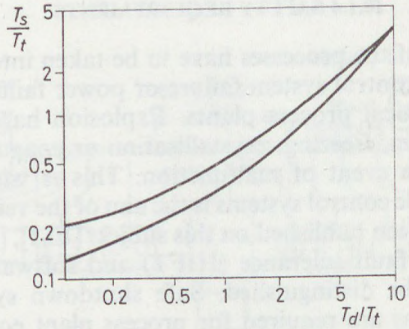


Fig. 10.2 Sampling time selection diagram

The maximum sampling time has to be calculated from control loop stability criteria. The time constant of the sensor and the times for analogue-digital conversion, data processing and computation, and for control manipulation all have to be calculated in this regard. The calculations depend on computer speed or microprocessor speed, too. The sampling time can be estimated with the aid of diagrams similar to Fig. 10.2.

The normalised sampling time ($T_s : T_t$) is shown as a function of the ratio of process time constant $T_t$ to dead time $T_d$. Generally accepted guide values, for information, are as follows:

| | $T_s$ |
|---|---|
| Flow control loops | 1–2s |
| Pressure control loops | 2–5s |
| Level control loops | 4–8s |
| Temperature control loops | 10–20s |
| Quality control loops | $\geq$20s |
| Limit checks, alarms | $\leq$1s |

Estimation of computing times requires some knowledge of the tasks of the computer. Material and energy balance calculations, linearisation, data reduction, credibility checks and the use of advanced algorithms all take computing time. The tasks can be spread in a distributed systems. The computing capability of a control computer is sometimes measured in terms of Weighted Blocks Per Second (WBPS). The number of software modules equivalent to the PID algorithm with all of its attributes processed in one second represents the limiting WBPS number which can be assigned to a certain control computer. Various control functions can be performed at various frequencies but, for a particular plant, a finite WBPS number can be calculated. For example, a plant with 50 flow control loops requires a control computer with a processing capacity of 50 WBPS.

### 10.1.4 SAFETY REQUIREMENTS

Safety requirements of the processes have to be taken into consideration when specifying a system. A control system failure or power failure may cause serious problems in most chemical process plants. Explosion hazard, loss of valuable materials, or evaporation, freezing, crystallisation or coagulation of the process fluids may occur in the event of malfunction. This is why the installation of fault-tolerant and reliable control systems is the aim of the vendors. Many theoretical investigations have been published on this subject [10.1], [10.4]. Two principles, hardware implemented fault tolerance (HIFT) and software implemented fault tolerance (SIFT), can be distinguished. Safe shutdown systems or emergency shutdown (ESD) systems are required for process plant equipment and control system failures. In the case of power failure special devices and programs are required for safe shutdown. There is a significant trend towards the introduction of dedicated security control systems, operating independently of the main control system. In situations where the control system itself may constitute a plant hazard, it is considered to be essential to have an emergency shutdown system which, despite being inactive for very long periods of time, will function reliably under preset conditions.

When power is restored after a power failure, two starting-up strategies are available:

(*i*) Wait for operator intervention;
(*ii*) Automatic computer start-up with two alternatives:
- — have the computer start at some predetermined starting point;
- — have the computer decide, on the basis of a predefined set of conditions, what to do.

The automatic restarting systems require a non-volatile mass storage device to store the application program.

## 10.2 COMPUTER CONTROL SYSTEMS

The first experiments to exploit the capabilities of computers for chemical process control began in the late 1950s. Universal digital computers were applied at first, but the emerging problems and requirements soon led to the development of a new type of computer, the process control computer. The price/performance ratio and reliability factor were not advantageous for on-line digital control. The appearance of microprocessors changed the situation and made direct digital control acceptable, even for smaller processes. Centralised, distributed and hierarchical control systems are simultaneously applied in the chemical and allied industries.

### 10.2.1 CENTRALISED COMPUTER CONTROL SYSTEMS

The first computer control systems were implemented with minicomputers. The early types had 12 or 16 bit word length and memories which had less storage capacity than those of the personal computers.

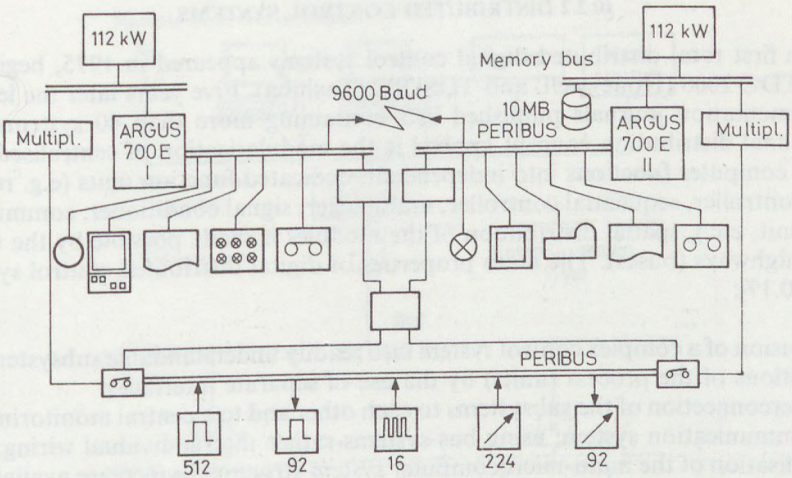


Fig. 10.3 Double computer control system (Ferranti)

A typical application is shown in Fig. 10.3. The safety requirements of the chemical industry justify the application of a double processor system. The Argus 700 E system has a word length of 16 bits and a cycle time of 670 ns. The program package PMS 700 (Process Management System) is used, and program development in CORAL or FORTRAN is possible. The first computer controls the process, the second is a hot reserve and is used for flowsheeting, material balance calculation and program development. If one computer fails the other automatically takes over its job; there are 16 interrupts. The system was installed in a large German chemical plant. The minicomputers have been superseded by a new generation of superminicomputers (e.g. Digital Equipment Corporation's VAX family) with 32 bit word length high speed and large memory. The increasing capacity and speed of newer minicomputers (superminis) rapidly have made earlier types obsolete.

Another group of centralised computer control systems is formed by the dedicated digital process control systems. Representative types are Diogenes (Rosemount) MDC 85 (Negretti & Zambra), PCS 8000 (Philips), etc. These systems are not general purpose computers with control software, but systems specially designed and manufactured for process control. One advantage of such systems is that no programming is required in the usual sense. This means that all control functions are preprogrammed and the user can select from the 'library' those items which are required. The adaptation procedure is called configuration and most systems have their own dialogue program available on a display. The Diogenes system has built-in analogue backup, while the PCS 8000 system claims that it has the flexibility of a computerised system, the software structure of a distributed system and the safety and reliability of an analogue control system [10.18]. The common problem with special systems is their uniqueness. The buyer is tied to the supplier.

### 10.2.2 DISTRIBUTED CONTROL SYSTEMS

The first total distributed digital control systems appeared in 1975, beginning with TDC 2000 (Honeywell) and TOSDIC (Toshiba). Five years later the leading instrumentation journals published lists containing more than 40 systems. The functional distribution concept applied is the modularisation of centralised multitask computer functions into independent, dedicated function units (e.g. regulatory controller, sequential controller, multiplexer, signal conditioner, communication unit, etc.), spatial distribution of the modules is made possible by the use of data highways (buses). The main properties of digital distributed control systems are [10.17]:

— division of a complex control system into readily understandable subsystems for sections of the process (units) by the use of separate interfaces;
— interconnection of the subsystems to each other and to a central monitoring and communication system, using bus systems rather than individual wiring;
— utilisation of the multi-microcomputer system structure to increase availability. Redundancy, self-monitoring and automatic fault diagnosis can be provided;
— utilisation of the high accuracy and flexibility of microcomputers for low cost integration of measurement and control;
— simplified design and programming, purchase and installation of the control system.

All distributed systems have three parts, the process stations or controller layer, the communication layer, and the process monitoring station with its man-machine interface. Fig. 10.4 shows the general scheme of a distributed digital control system.

To get an idea of the complexity of a real distributed digital control system, Fig. 10.5 shows an overview of the TDC 2000 (Honeywell, USA) system, which later became part of the TDC 3000 system. Generally, not all units are used in each application and usually more than one example of a given unit is required. The computerised operation centre has models of different complexity, according to plant size and complexity.

Most distributed control systems apply multiloop, multifunction control units linked by data highways to each other and to the man-machine interface, the process operator console. The use of single access data communication channels is characteristic. Some of the systems apply a redundant data highway. Two groups can be distinguished. In the first group the individual multifunction control units cannot communicate with each other, thus a common database cannot be established except with a host computer or by external wiring. In the second group the global database is established by direct communication from one multifunction unit to another (e.g. Teleperm M, Siemens; 1774 s., Allen-Bradley). Digital control systems of the first generation were able to control continuous processes but separate systems had to be applied for batch control [10.3], the advanced systems integrate all kinds of control. Several levels of redundancy are available. Both redundant data highways and redundant processors can be provided in any mix, as specified by the end user [10.15].

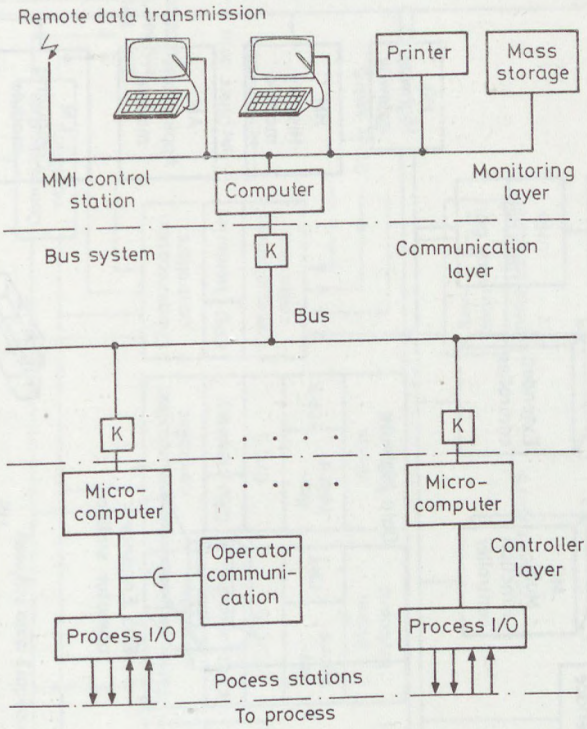


Fig. 10.4 Main structure of distributed digital control systems

The distributed digital control systems with single access channels have the drawback that emergency manual operation of the plant requires additional manual equipment. This means that the operator has to be trained in two different man-machine interfaces, one being the VDU and one similar to a conventional analogue system. Distributed digital control systems with multi-access channels overcome this difficulty [10.14]. Fig. 10.6 shows a distributed multiple access channel system architecture. Modulating control, sequential control, process start-up and shutdown control, safety interlock and alarm functions can all be performed within the multifunction control units. Information essential for cooperation between separate process units is communicated over a separate Communication Link (C-LINK) from one MFCU to another. A global database can be established.

### 10.2.3 HIERARCHICAL CONTROL SYSTEMS

Extension of digital control systems leads to the application of hierarchical control systems. Plant control hierarchy is a consequence of plant management hierarchy. One possible scheme of process control hierarchy is shown in Fig. 10.7. The functions of the various levels can each be dedicated to a separate computer,

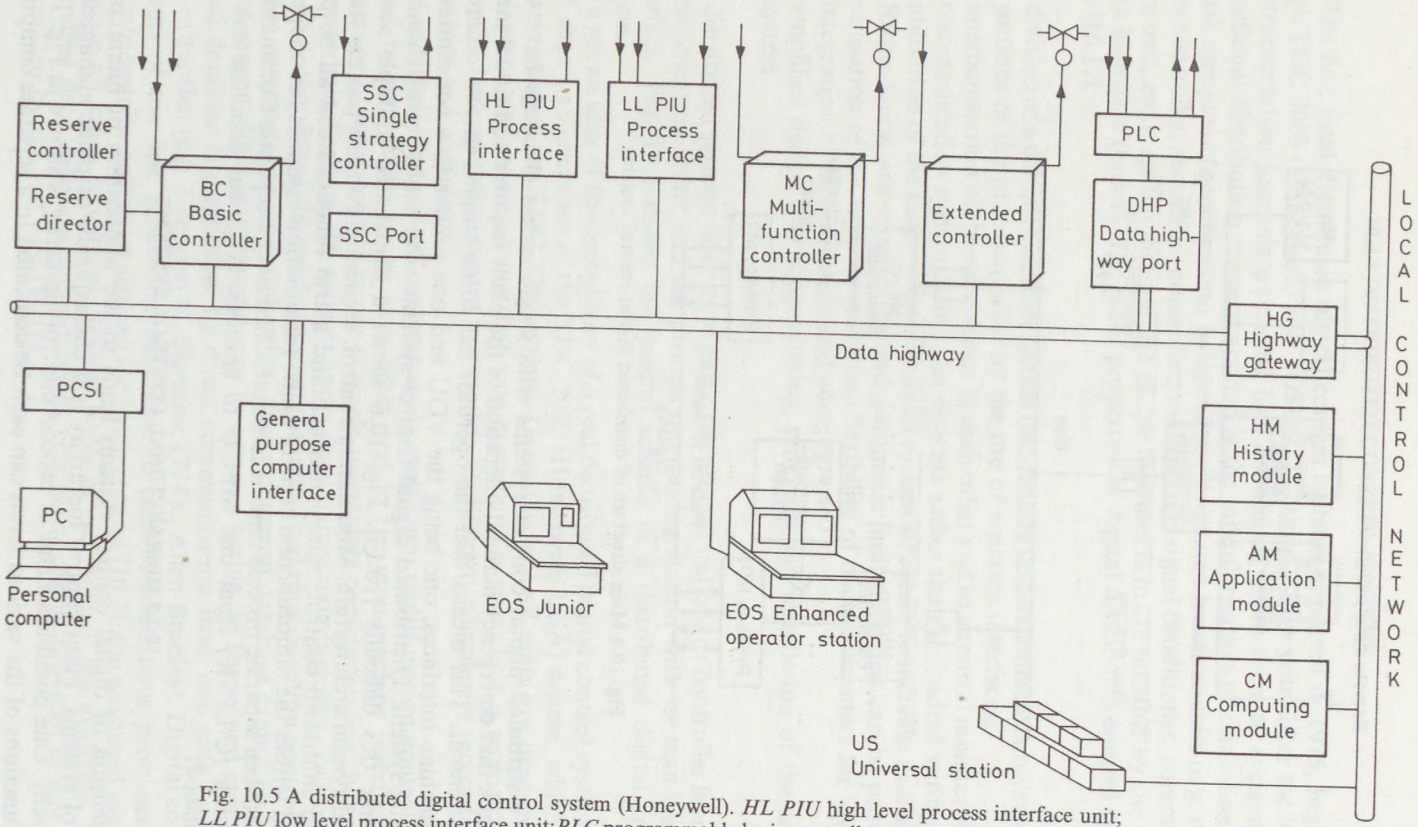


Fig. 10.5 A distributed digital control system (Honeywell). *HL PIU* high level process interface unit; *LL PIU* low level process interface unit; *PLC* programmable logic controller; *PCSI* Personal Computer Serial Interface

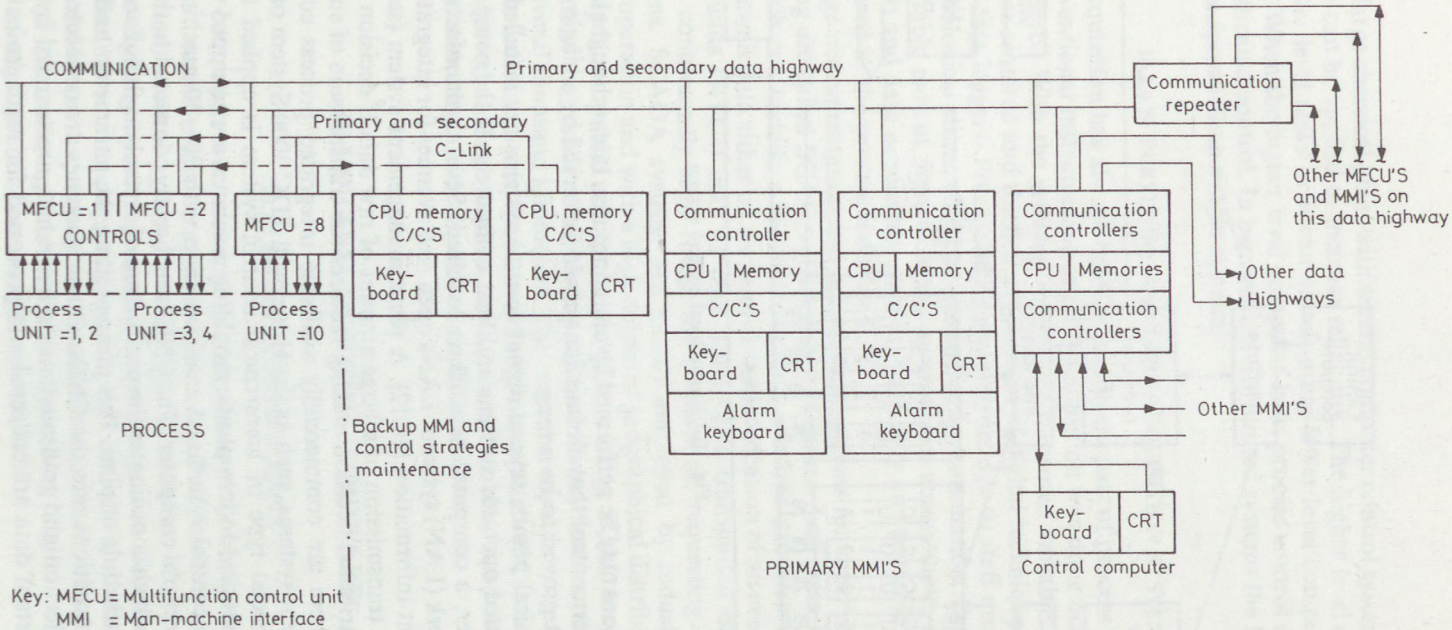


Fig. 10.6 Distributed digital multi-access channel system

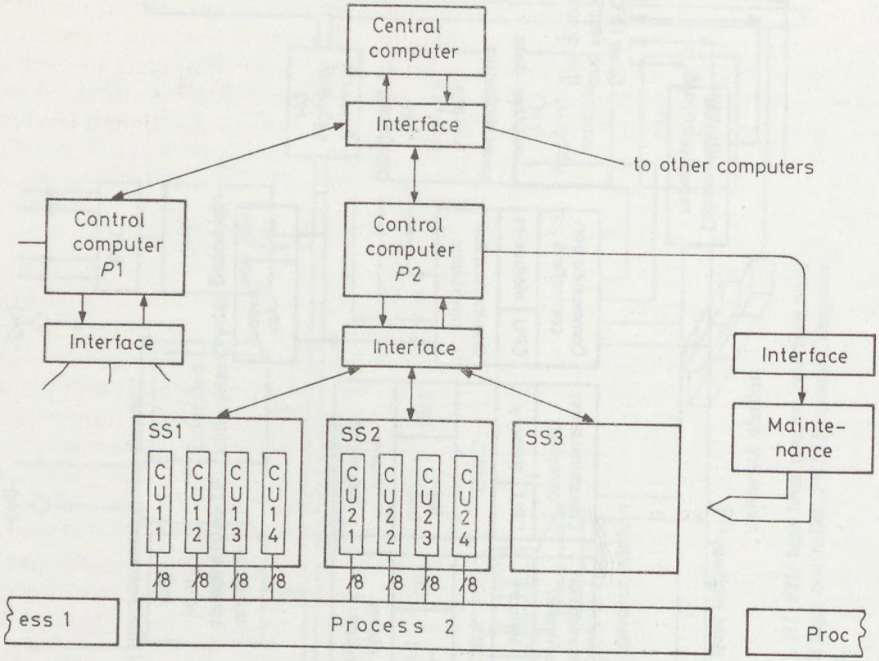


Fig. 10.7 Hierarchical control system

or several functions may be performed by one computer. It was thought in the early days of computer control that all functions could be served by a single computer, but this concept proved to be wrong.

In large chemical plants, several digital control systems are installed, together with the associated operator stations and host computers. If the computers have to work together, a computer network is required. Several manufacturers offer local area network (LAN) systems. LANs open new avenues for integrated control and management information [10.12]. A plant management system (see Chapter 11) requires the transmission of a large amount of raw data if decision making is centralised. Distributed decision making requires the transmission of summarised information. There are commercially available integrated process control and plant management systems, such as the Honeywell TDC 3000 System or Foxboro Spectrum. A special type of hierarchical control system is applied in plastics manufacturing shops. Modern plastic moulding machines are equipped with CNC or at least PLC control systems. A machine shop with 30—50 machines can be supervised by a central computer. The CNCs are directly connected to the supervisory computer, which coordinates the production of several machines according to the production schedule or plan. This means setting the parameters and changing (loading) the instructions into the CNCs. Other machines are connected through special data collection and transmission devices which are scanned by the computer. All important data are collected and processed for management informa-

tion. In a large chemical plant with several computer control systems the hierarchical system can be applied to increase reliability. The higher level can execute part of the lower level tasks or it can switch other lower level computers to back up functions. When the higher level computer fails, process control is sustained with less sophisticated control. In hierarchical distributed systems the highest level can be omitted for small or simple systems.

### 10.2.4 SUPERVISORY AND DATA ACQUISITION SYSTEMS

Data acquisition has always been an important part of process plant operation. With conventional instrumentation data acquisition was done manually by filling out log sheets. With the growing number of measured variables automatic data logging was required and the first application of digital technique were in connection with data loggers. Fluctuating human errors due to staff quality and temporary psychological status could be eliminated by automation. Data acquisition is an inseparable part of digital control systems but autonomous supervisory data acquisition and data processing systems, stationery and portable data loggers are broadly used in the process industries.

The large instrumentation and information systems for supervision and process monitoring are called SCADA (Supervisory Control And Data Acquisition) systems, which can include a few up to several hundred processors at remote sites which transmit data either on demand or on the occasion of an event. These remote terminal units (RTUs) may or may not receive transmitted data. The master station(s) continuously scan round the outstations, requesting data and giving instructions. SCADA systems are mainly employed by industries engaged in non-stop operation and with a high degree of geographical distribution, such as oil and gas pipelines, public utilities, oil fields, etc. Large SCADA systems may have several tens of thousands of measuring points and may involve telemetry distances of over several thousand kilometers. The central computer(s) are linked through a network to local terminals, usually with microcomputers (PCs). Data communication is achieved through various media, postal cables, proprietary cables, and radiocommunication, with the aid of satellites if necessary.

## 10.3 DIGITAL CONTROL HARDWARE

### 10.3.1 DIGITAL CONTROL UNITS

Digital controllers were not widely accepted until microprocessors and microcomputers became available at reasonable cost. The smallest unit of digital (or computerised) control systems is the digital controller. Control functions are performed digitally by microprocessor based equipment. Economy at first forced the manufacturers to develop multiloop digital controllers, which are able to serve 4 to 8 control loops. As prices of microprocessors and memories decreased, the one loop digital controller appeared. Before describing digital controllers, a brief summary of microprocessor technique seems useful.

### *Microprocessors*

A microprocessor is a complete central processing unit (CPU) of a digital computer implemented on a single chip (or chip set). This physical realisation on one chip imposes some limitations, for example in the number of connections (pins) and the communication possibilities to other devices. A microprocessor configuration consists of an arithmetic-logic unit (ALU), accumulators, a number of registers for temporary data storage, an instruction decoder and microcontrol unit, a counter and stack pointer and several input-output lines. Timing is normally external to the chip. Microprocessors are specified first by the word length of the registers (4, 8, 16 bits, or recently 32 bits). Data and address buses and control lines are available for communication with other circuits. A special type of microprocessor is the bit-slice processor, where the control part is implemented once, while the data part is repeated until a sufficient word length is obtained. To obtain a functioning device, a microcomputer cell has to be formed. This contains a microprocessor, a memory and auxiliary circuits to interface with input-output peripheral equipment. To this microcomputer cell are then coupled the related hardware parts to form a microcomputer. Fig. 10.8 shows a general microcomputer cell.

In a controller the main objective of incorporating a microcomputer is to perform the functions of a set of different integrated circuits (ICs); in other words, to replace hardwired logic with programmable logic. There is a trade off between software and hardware to achieve cheaper manufacturing, increased capability and flexibility [9.1], [10.16]. Most distributed control systems have single loop digital controllers at their lowest levels if required [10.13].

### *Single loop digital controller*

Single loop digital controllers are manufactured with different types of front panels. The analogoue-like controllers already mentioned can provide a simple alternative when retrofitting chemical process plant instrumentation by directly replacing the analogue controllers. The digital controllers can later be connected to form a distributed hierarchical control system. Most of the autonomous single loop digital controllers have alphanumeric display and push button operating facilities. Rack mounted controllers are also available. Some controllers have an additional bar graph indicating facility.

The advantage of a digital controller is its intelligence. Many special functions can be programmed in the memory of the controller. The multi-variable one loop controller (Toshiba) can perform:

— mass flow computing (PD, T, P),
— ratio control,
— cascade control,
— internal reflux control,
— blending,
— batch process control, etc.

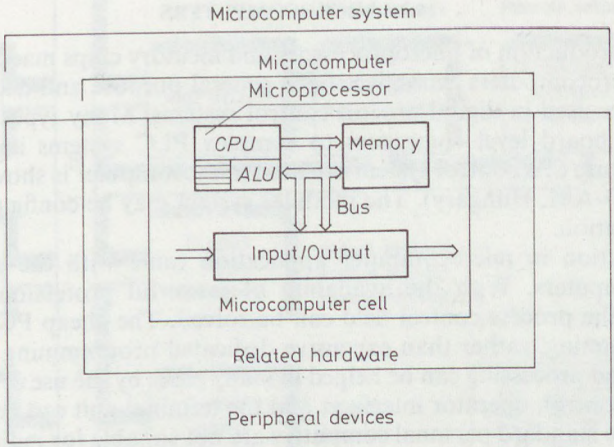


Fig. 10.8 Microcomputer cell

The latest development is the appearance of self tuning controllers. One of the first was the EXACT tuning system, used with Foxboro 760 series controllers. The *EX*pert *A*daptive *C*ontroller *T*uning system uses the pattern recognition method. In 1987 more than 20 types of self tuning controllers were on offer.

### *Multiloop digital controllers*

The capacity of a microprocessor makes it possible to serve more than one control loop and drastic cost reduction can be achieved with a multiloop controller as compared to the one loop controller. The first generation of digital multiloop controllers appeared as a subsystem of digital distributed control systems (e.g. TDC 2000, Honeywell; Tosdic, Toshiba, etc.). The second generation consisted of autonomous multiloop digital controllers (e.g. MICON or DORIC). The development of digital control systems merged these two concepts and now most of the autonomous controllers can be coupled to form a complex distributed control system, and subsystems of DCS can be configured to operate autonomously.

Multiloop controllers can generally handle 4 to 8 loops. Some distributed control systems have a series of controller types from the simple one loop controller (Homac 100), the intelligent one loop controller (Homac 300), the 8 loop controller (Homac 500) and the 16 loop controller (Homac 700) and all these can be connected to the computerised advanced operation center (Homac 1500) made by Hokushin. The Honeywell TDC 3000 Basic Controller module with its 16 bit microprocessor services up to 8 slots, each being a complete control loop or an auxiliary computing function. The unit is factory programmed to perform digital controller tasks by means of a ROM (read only memory). The TDC 3000 Multifunction Controller can additionally perform logic functions and batch control.

### 10.3.2 MICROCOMPUTERS

The mass production of microprocessors and memory chips made the manufacturing of microcomputers attractive. Both general purpose and dedicated microcomputers are used in digital process control systems. Many types are available, from simple board level computers to complex PLC systems and DCSs. The general structure of a control system oriented microcomputer is shown in Fig. 10.9 (SAM, MMG-AM, Hungary). The modular system may be configured according to the application.

The revolution in microcomputer application came with the appearance of personal computers. With the availabity of powerful professional PCs many problems in the process control field can be solved. The cheap PC can serve for PLC programming, rather than expensive dedicated programming devices. Data acquisition and processing can be helped in many cases by the use of a PC. Finally, supervisory control, operator interface, and the terminal unit can be implemented with PCs. The standard personal computers are not suitable for industrial application, but the leading manufacturers have developed industrial variations of their PCs. The possibilities of PC application have not yet been completely explored.

### 10.3.3 MINI- AND SUPERMINI COMPUTERS

The minicomputer is a small computer derived from conventional general purpose computers to serve process control purposes. One of the first minicomputers made for process control purposes was the PDP 8 from Digital Equipment Co., which was followed by the 16 bit PDP 11 family. This minicomputer type was very successful and became the prototype of minicomputers. Similar types are produced worldwide. The next successful type was the 32 bit VAX family of mini- or supermini computers. A member of this family, the microVAX is preferred by control system manufacturers, too. Several control systems have general purpose computers incorporated (e.g. Foxboro) and the end user is not interested in the type of hardware, but in the performance of the system as a whole.

The architecture of a control computer is shown in Fig. 10.10. The Central Processing Unit (CPU) is similar to the CPU used in general purpose computers. Several special parts are attached to the CPU: a real time clock which is necessary for real time operation; an interrupt unit, which is important if the computer controls a technological process; a watchdog for continuous diagnosis, etc.

To provide increased flexibility among the connections a bus system is employed (e.g. Unibus, PDP; Peribus, Argus) to which both conventional and process peripherals can be connected. The reliability of control computers has to be very high, with mean time between failure (MTBF) values greater than 8000 hours; uninterrupted service 24 hours a day and 350 days a year has to be possible. An uninterrupted power source has to be installed to avoid dangerous or expensive shutdowns and loss of memory. Special software for memory saving, safety backup and restarting is usually delivered with the system. Supermini computers are mostly applied as host computers at the higher hierarchical level above the digital controllers and microcomputers distributed near to the process. Special fault tolerant computer systems are offered, such as the SDR 1300 synchronous duplex computer from Krupp–Atlas (Germany).

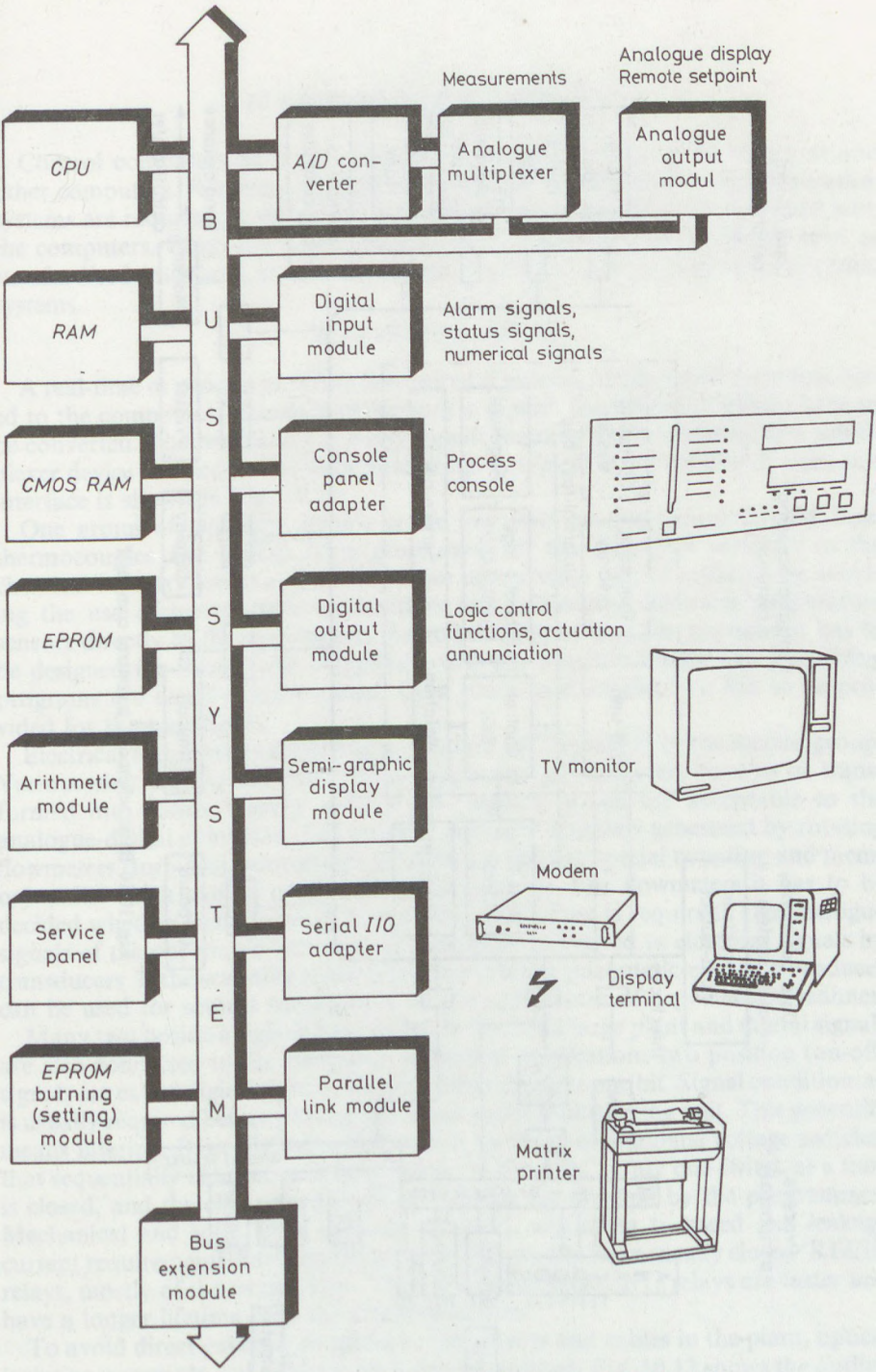


Fig. 10.9 Microcomputer system architecture (e.g. MMG-AM)

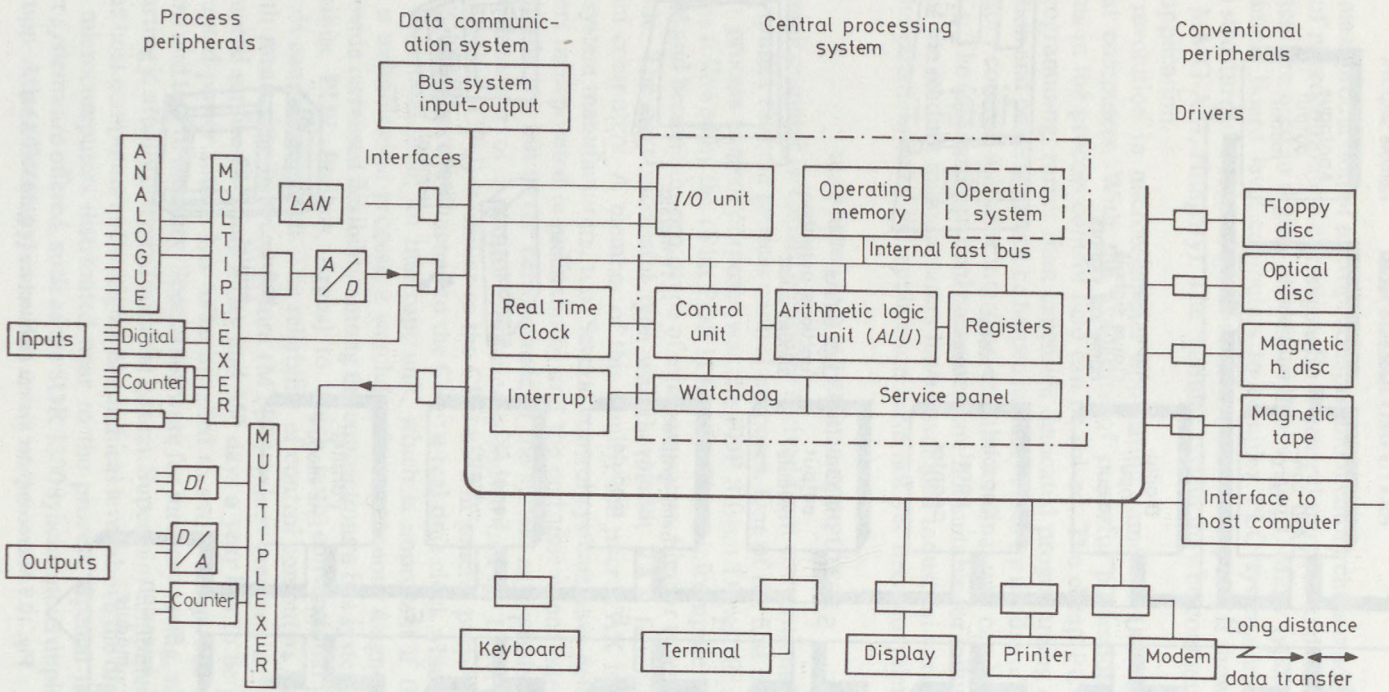


Fig. 10.10 Basic scheme of a control computer

## 10.4 COMPUTER INTERFACES

Control computers have to communicate with the process, the operator and other computers. For these purposes input–output interfaces and communication systems are required. A wide variety of computer interfaces can be delivered with the computers. From the user's point of view, computer-independent unified or standardised interfaces are an advantage. The same is true for communication systems.

### 10.4.1 PROCESS INPUTS

A real-time or process interface is required if process inputs are directly connected to the computer. Since data processing is digital, the analogue signals have to be converted. The processing of many signals requires signal scanning by a multiplexer device and sequential data processing. A typical block scheme of a process interface is shown in Fig. 10.11.

One group of analogue signals is the low level electric group derived from thermocouples and RTDs. As a great many of the measured variables in the chemical industry are temperatures, major cost savings can be achieved by avoiding the use of temperature transmitters and connecting electrical temperature sensors directly to the data logger; the switching system of the multiplexer has to be designed for this service. Amplifiers with the required ranges and linearising programs are usually incorporated. Cold junction compensation has to be provided for thermocouples.

Electrical transmitters supplying a standard DC signal are in the second group. Various electrical signals from strain gauges and gas analysers have to be transformed into forms, usually 0–10 V DC signals, which are acceptable to the analogue-digital converter. The series of electrical impulses generated by rotating flowmeters (turbines), counters or tachometers require special counting and memory units which can be connected to the scanner. For flowmeters it has to be decided whether instantaneous flow or integrated flow is required. The analogue signals of the pneumatic transmitters have to be converted to electrical signals by transducers. If the scanning speed is not too fast one pneumatic-electric transducer can be used for several transmitters by the application of a pneumatic scanner.

Many two position signals have to be checked in a large plant and digital signals are also connected to the computer. In several publications two position (on-off) signals are called digital signals, because they represent one bit. Signal conditioning is usually required before passing the signal to the multiplexing unit. This generally means filtering. Basically the multiplexer is an array of analogue voltage switches that sequentially connect each input signal to the ADC. Only one switch at a time is closed, and the closing sequence and timing are directed by the programmer. Mechanical and solid state switches are used, according to speed and leakage current requirements. Mechanical switches are usually hermetically closed 'REED' relays, mostly of the wetted type. The solid state (MOSFET) relays are faster and have a longer lifetime than the mechanical ones.

To avoid direct galvanic coupling to the sensors and cables in the plant, optical isolation or sample and hold methods can be adopted. Fig. 10.12 shows the outline of a sample and hold circuit. Basically the sample and hold consist of switches and

a storage medium, usually a capacitor. A two wire system is shown in the diagram, which is used if the signal is received through two earth-independent wires. All separating switches are closed except one. The voltage across the capacitors follows the input signal until a hold command is received from the system programmer. At that point the switch opens, storing the voltage across the capacitor. The switches of the multiplexer are all open except that one which connects the capacitor in the 'hold' state to the amplifier or AD converter.

The heart of the interface is the analogue to digital converter. Conversion of the analogue signals to digital signals can be accomplished in several ways, including integration, counting, successive approximation and parallel conversion. Interfer-

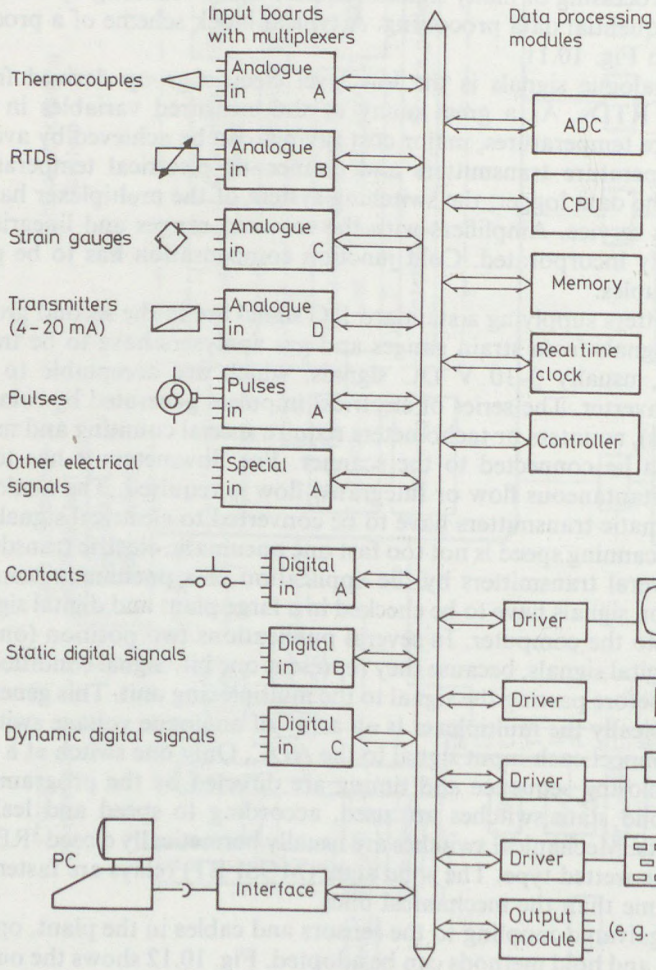


Fig. 10.11 Data acquisition (datalogger) scheme

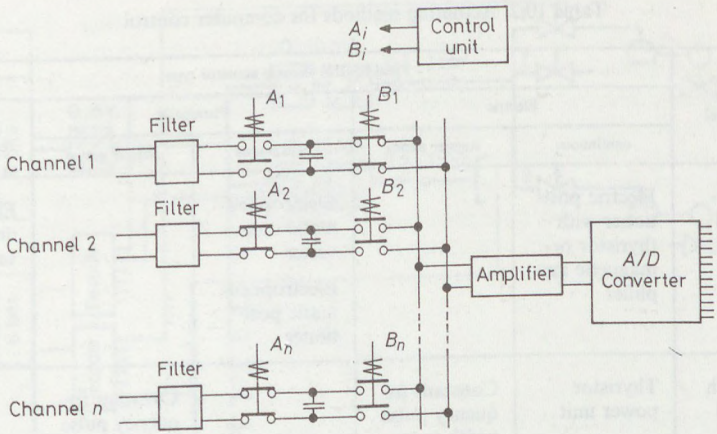


Fig. 10.12 Multiplexer input system (sample and hold)

ence rejection is an important feature of AD converters. The latest developments in microelectronics have made it possible to produce cheap integrated ADCs. The digital signal is further processed by scaling and digital filtering, and validity and limit checks can be made.

### 10.4.2 PROCESS OUTPUTS

Final control elements, alarm signalling devices and interlocks have to be operated by the computer, and a process output interface is required for this task. The sequential computation results have to be transformed to parallel signals suitable for continuous actuation.

Supervisory control requires controllers with remote setpoint change. Electromechanical servo drives or digital electronic solutions can be applied. Both electronic and pneumatic controllers are available with this option. Distributed digital control systems are coupled through a communications interface. Some pneumatic systems have electronic interfaces for this task (e.g. Moore, USA). In advanced systems the setpoint can be changed as well as the time constants, gain and control mode, and adaptive control is possible. Direct digital control, either centralised or distributed, requires special process output interfacing. A digital to analogue converter (DAC), preamplifier, address coder, command storage and final amplifier may all be parts of the process interface unit. The power drive for two position control may be electromechanical (relay) or electronic semiconductor (thyristor) equipment.

Actuators of different types have to be controlled digitally. The characteristic output modes are presented in Table 10.2. The DAC used in control systems is in general a parallel type device, receiving the control word in bit-parallel mode. Eight bit words are usually utilised. Output voltage (0 to +10 V) or output current (4 to 20 mA) signals are stored in parallel memory units for addressing the process units. A control unit serves for timing and address coding. The output circuits are

Table 10.2. Actuating methods for computer control

| Computer output signal | Final control element actuator type | | | | |
|---|---|---|---|---|---|
| | Electric | | Pneumatic | | Hydraulic continuous |
| | continuous | stepper motor | continuous | stepper motor | |
| Direct current signal from D/A converter | Electric positioner with thyristor or magnetic amplifier | | Electropneumatic converter<br>Electropneumatic positioner | | Electrohydraulic converter |
| Pulse width modulated signal | Thyristor power unit<br>Relay power switch | Constant frequency pulse width pulse number converter and controller | | Constant frequency pulse width pulse number converter and pneumatic stepper motor controller | |
| Frequency modulated pulse signal | | Stepper motor control device | Stepper motor controller and pneumatic pressure signal set unit | Pneumatic stepper motor controller (discrete logic) | Stepper motor controller plus hydraulic positioner |

galvanically separated from the inner circuits and are shielded against external influences. A control program supervises operation and in the event of a failure it switches automatically to local control (back-up) or to manual control.

Counting devices are applied for impulse duration and impulse number modes. When the actuator of the final control element has an integrating character (e.g. an electric motor drive) the process output interface may be more simple, omitting any separate integration element.

Pneumatic control valves are widely used in the chemical and petroleum industries. Valve positioners accepting digital control signals have been available almost from the beginning of computer control. Devices with stepper motors have the advantage that, in the case of power failure, the last position is held. An interesting pneumatic valve control method is shown in Fig. 10.13 and can be applied if many pneumatic valves have to be interfaced with a computer. Eight groups, each of 8 valves, can be formed. The control computer gives two output signals, a valve address and a valve position signal. The valve position signal from an output DAC is connected to the amplifier selected by the address code signal. The output current signal actuates an electropneumatic transducer. Each transducer serves 8 valve actuators. The pressure in the control line is held with 0.4% accuracy. The address controller opens the solenoid valve of the addressed control valve and the pneu-

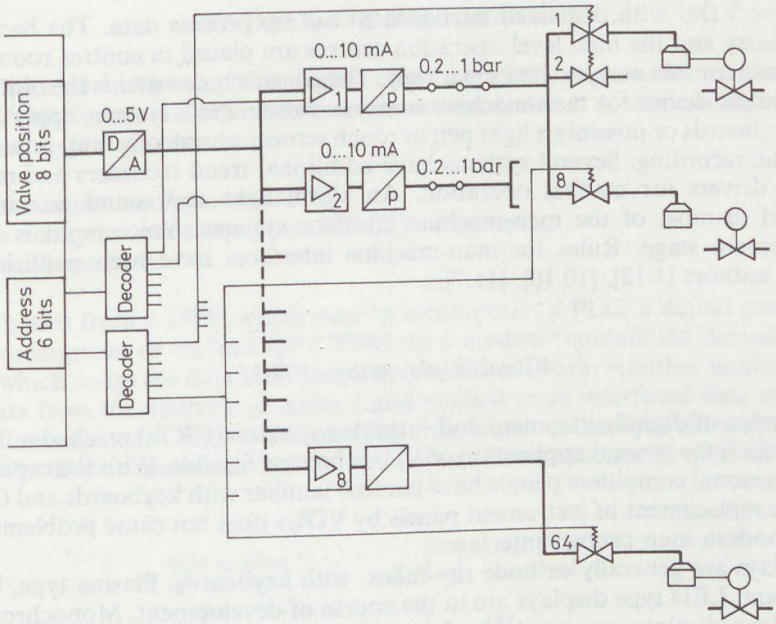


Fig. 10.13 Digital control of pneumatic valves

matic relay receives the control signal. It is clained that installation of this system is cheaper than individually installed decoding and positioning devices. (This may change with time.)

### 10.4.3 MAN-MACHINE INTERFACE

Communication between the plant operator and the process is provided by the man-machine interface* of the control system. There are several types of man-machine interface, ranging from a simple LED numerical display with push buttons to the advanced operation centre with colour graphics displays and a mini-computer system. The users of the man-machine interface have different tasks. The process operator wants to monitor the plant in comfort and security. The control engineer requires configuration and program development capabilities. The maintenance technician needs test programs and self-diagnosis facilities. The plant manager wants lists, diagrams, balances, average values, fault analysis and perhaps plant simulation.

Small systems usually apply the same hardware for all tasks, large systems have separate visual display units (VDUs) for different jobs. Distributed digital control systems have greater numbers and levels of man-process interfacing. The local level has instrument-like displays and keys (e.g. the Data Entry Panel of TDC 2000) or

* The expression Human–Machine–Interface (HMI) is gaining acceptance.

a passive VDU with dedicated keyboard to call up process data. The basic, the supervisory and the high level operation centres are placed in control rooms. An engineer's console may be sited separately. The console typewriter is the oldest and most simple device for man-machine communication. New systems apply VDUs with keyboards or possibly a light pen or touch screen, a hardcopy unit, printer and magnetic recording. Several systems have additional trend recorders and manual output drivers for manual operation. An alarm light and sound warning are installed in most of the man-machine interface systems. Voice input is at the development stage. Rules for man-machine interfaces have been published by several authors [1.12], [10.10], [11.7].

### *Visual display units (VDU)*

The price of digital equipment and cathode ray tubes (CRTs) reached a threshold at which the general application of VDUs became feasible. With the expanding use of personal computers people have become familiar with keyboards and CRTs, thus the replacement of instrument panels by VDUs does not cause problems; this is the modern man-process interface.

Displays are generally cathode ray tubes with keyboards. Plasma type, liquid crystal and LED type displays are in the course of development. Monochromatic and colour displays are available, but most engineers prefer a colour display. Storage tube and refresh type screens are on the market. Vector type displays produce high quality graphics pictures but are more expensive than raster displays. General purpose control consoles for the chemical industry are usually equipped with colour raster displays which have medium graphics capabilities. The screen size is usually 510 mm or 19″ diagonal, but 670 mm screens are also used.

The VDU is manipulated by a keyboard, but some vendors offer touch sensitive screens with soft keys as an option (e.g. Fluke, Modicon). There are several advantages to virtual keys or light pens for the operator. With a light pen it is possible to access the flowsheet directly and this eliminates the error of missing the right push button. Another advantage is that the operator's eye remains on the same level using the virtual keyboard and does not have to adapt to the real keyboard on the desk. There are several autonomous VDU terminal systems which can be connected to digital or analogue control systems and serve as operator console equipment (e.g. DISIT, Siemens; PAN 30, BBC; VIDEOSPEC, Foxboro; Tesselator, AEG, etc.). These intelligent terminals are available with software packages for different tasks such as text editing for logsheets, flowsheet graphics building, and trend recording.

The industrial workstations (e.g. OmniVU by Xycom, USA or Intelligent MMI by Metra Instr. USA) can communicate with all major PLCs and host computers. The operator workstations have 32 bit architecture, colour bit mapped graphic features, windowing, database and user definable function keys. At the other end of the scale commercially available PCs are transformed into an operation monitoring and reporting device, or a small system operator interface. Various hardcopy units can be connected to the VDU terminals to take prints from the screen. Further datails on MMIs are in Chapter 11.

## 10.5 DATA COMMUNICATIONS

Distributed and hierarchical digital control systems require high capacity, together with fast and reliable data communication systems. A communication path has three types of components:

data terminal equipment (DTE),
data communication equipment (DCE) or modems,
network medium.

Data is sent from a DTE, which may be a computer, a PLC, a digital controller, a microcomputer or an intelligent VDU, to a modem (modulating-demodulating unit) which codes the data and transmits it to the network. Another modem takes the data from the network, decodes it and sends it to an interfaced data terminal. This communication has many levels (physical, functional and procedural) and lots of modes. Data communication and bus systems form a science on their own. Data

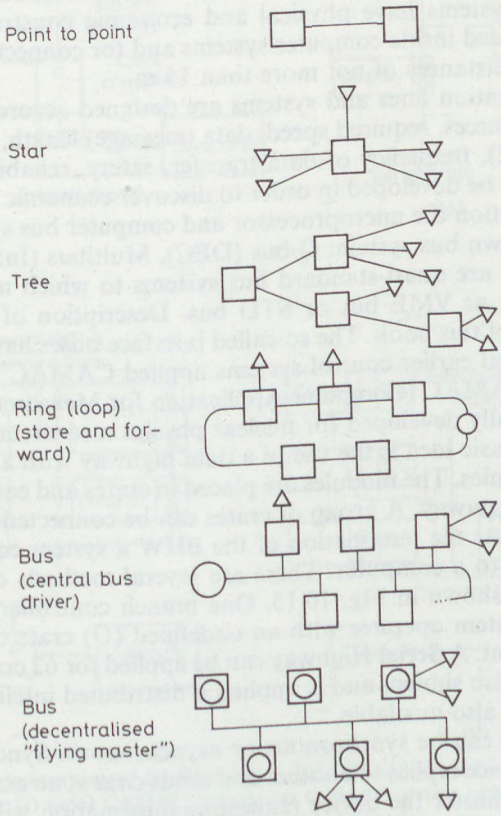


Fig. 10.14 Data communication topology

communication systems may primarily be grouped according to their topology. Fig. 10.14 shows the main types. Point-to-point and star connections are applied in conventional (mostly analogue) control systems. A bus system requires one or more bus drivers. Master and slave stations can be installed, or the flying master principle can be adopted. This latter uses devices which can perform the task of a bus driver on each station and thus provides improved safety. Several combinations of the main types are used in practice (e.g. polygonal in star, etc.). A tree needs switching circuits, a bus system requires driver unit(s). Bus systems, or data highways are essential parts of digital equipment and digital control systems. The distributed control system is essentially a large data communication network and it may be mentioned that one of the best-known control systems was named Network 90 (Bailey Controls later changed it to INFI 90).

### 10.5.1 DIGITAL DATA TRANSFER

Digital data transfer has two alternatives: the bit serial and the bit parallel modes. The bit serial type system transmits the data bit by bit. The bit parallel type systems have as many channels as bits that have to be transmitted simultaneously. Bit parallel bus systems have physical and economic constraints and they are therefore mainly used inside computer systems and for connecting programmable instruments over distances of not more than 15 m.

Data communication lines and systems are designed according to line length, number of data sources, required speed, data (message) length, number of participants (DCE, DTE), frequency of data transfer, safety, reliability, etc. Evidently many types had to be developed in order to discover economic solutions. First we should briefly mention the microprocessor and computer bus systems. Each manufacturer has its own bus system: Q-bus (DEC), Multibus (Intel) Versabus (Motorola), etc. There are quasi-standard bus systems to which many suppliers can deliver units, such as VME bus or STD bus. Description of these systems lies beyond the scope of this book. The so-called interface buses have to be mentioned here because several earlier control systems applied CAMAC and HP (IEEE St. 488) buses. The CAMAC (Computer Application for Measurement and Control) system was originally developed for nuclear physics measurements and was later standardised. Its basic idea is the use of a data highway with a predetermined set of connecting modules. The modules are placed in crates and each crate has a crate controller with a dataway. A group of crates can be connected through a Branch Highway (BHW). At the termination of the BHW a system controller is used to connect the crates to a computer. There are several methods of connection, and some of them are shown in Fig. 10.15. One branch controller can handle seven crates. The bus system operates with an undefined (U) crate controller which is computer-dependent. A Serial Highway can be applied for 62 crates. An intelligent CAMAC crate is also shown, and is applied if distributed intelligence is required. A new Fast Bus is also available.

Bus transactions can be synchronous or asynchronous. Synchronous methods require that one device replies to another and sends data at an exact instant in time. In asynchronous transfer the device requesting information will wait for a reply. This allows devices with different response times so share the same bus.

Distributed control system vendors all have their own bus systems. These are characterised by a maximum length (e.g. 6 km), data transmission speed (e.g. 5 Mbit/s), number of connected stations or 'drops' (e.g. 254) and operating system (e.g. token or baton passing). The different tasks of the various hierarchical levels generally need different bus systems, thus one vendor has two or three different communication systems. As example the bus systems of INFI 90 (Bailey Controls, USA) is shown on Fig. 10.16. At the highest level, connected to the Management

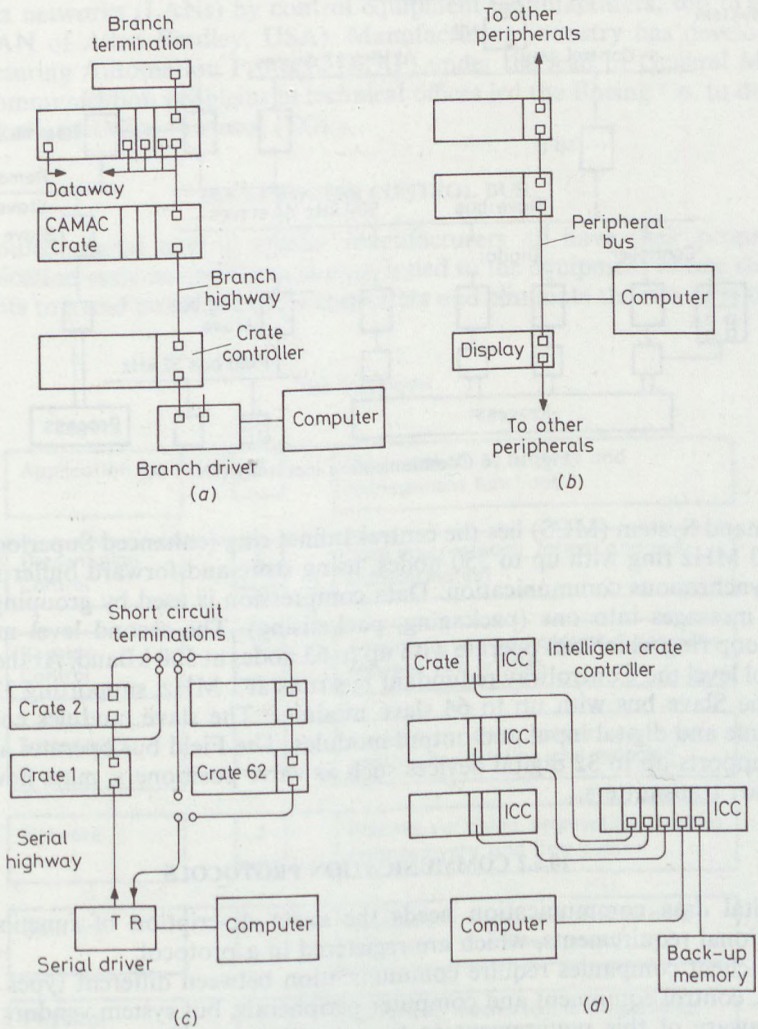


Fig. 10.15 CAMAC interface system. (*a*) CAMAC branch; (*b*) multicrate CAMAC system interfaced to a unique computer; (*c*) serial CAMAC system; (*d*) CAMAC system with distributed intelligence (ICC) (=intelligent CAMAC crate)

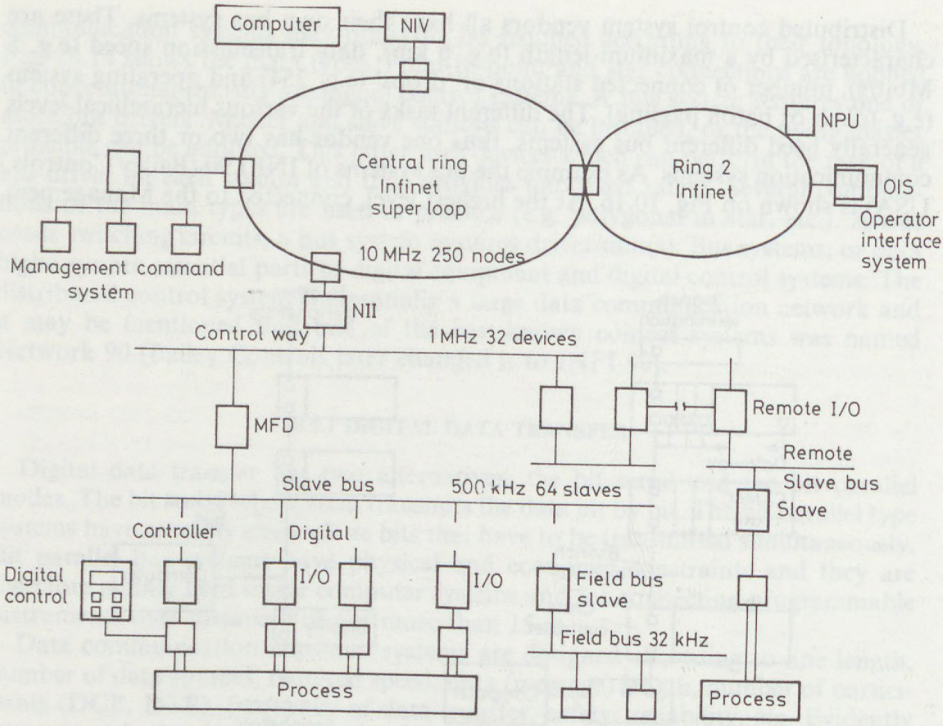


Fig. 10.16 Communication hierarchy (INFI 90)

Command System (MCS) lies the central Infinet ring (enhanced Superloop). This is a 10 MHz ring with up to 250 nodes, using store-and-forward buffer insertion and synchronous communication. Data compression is used by grouping several short messages into one (packaging, packetising). The second level may be a Plantloop ring which can operate with up to 63 nodes at 500 kBaud. At the process control level the Controlway redundant bus runs at 1 MHz, supporting 32 devices and the Slave bus with up to 64 slave modules. The slave modules consists of analogue and digital input and output modules. The Field bus operates as a slave and supports up to 32 digital devices such as valve positioners, mass flowmeters, or smart transmitters.

### 10.5.2 COMMUNICATION PROTOCOLS

Digital data communication needs the exact description of functional and operational requirements, which are registered in a protocol.

The client companies require communication between different types of computers, control equipment and computer peripherals, but system vendors seem to be unaware of this requirement as they continue to offer equipment which is incompatible at the communication level. The first attempt to solve this problem was the development of an 'Open Systems Interconnection' (OSI) Reference Model

standard by ISO. This cannot solve all problems because even if the equipment from different manufacturers is based on the OSI model, common communication may still not be possible because more than one standard protocol has evolved for some layers of the OSI model. To complicate matters further, even with a single protocol there may be classes to be selected or optional parameters to be used which require agreement by the suppliers of the equipment. The seven layers of the OSI reference model are shown in Fig. 10.17. There are several national and international standards which refer to the OSI layers, e.g. Data link protocol IEEE 802.4, Session kernel ISO/IS/8326. The OSI architecture is generally considered in local area networks (LANs) by control equipment manufacturers, too (e.g. VistaNet LAN of Allen Bradley, USA). Manufacturing industry has developed a Manufacturing Automation Protocol (MAP) under the lead of General Motors Corp. Communication problems in technical offices led the Boeing Co. to develop a Technical and Office Protocol (TOP).

### 10.5.3 PROCESS CONTROL BUS

Distributed digital control system manufacturers all have their proprietary communication systems and the customer is tied to the equipment of one supplier if he wants to avoid costly protocol converters and eliminate the risk of warranty

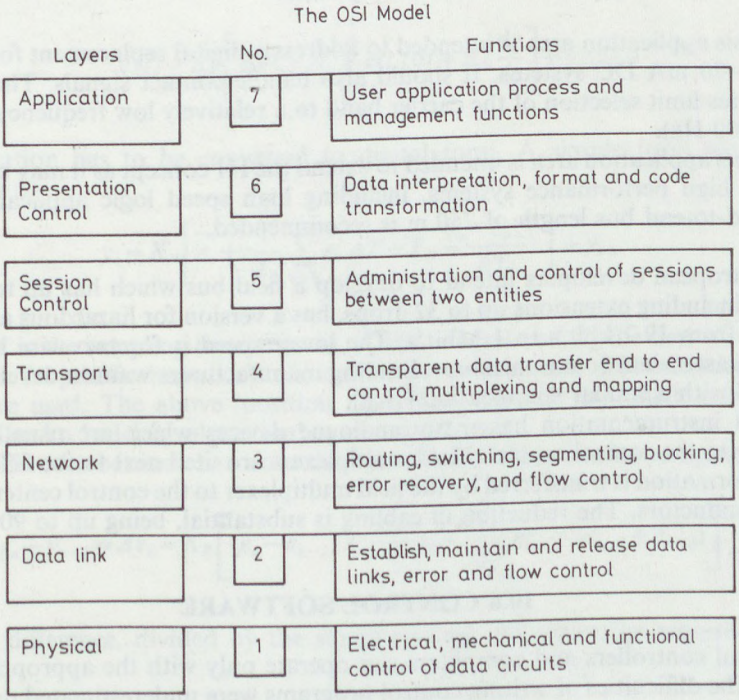


Fig. 10.17 ISO-OSI layer architecture

problems. The IEC, together with other national standardisation bodies, developed a process control bus international standard, named PROWAY. There are three versions of PROWAY, which is a dual redundant asynchronous, serial, multimaster communications network designed for process control systems. It will support up to 100 intelligent stations over a total network distance of up to 2 km, data rates up to 100 kbit/s with a maximum network access time for any station of 20 ms.

The operating principle of an asynchronous bus system describes how the data transmission is shared between participants. Most of the systems use either token passing or carrier sense multiple access with collision detection (CSMA/CD) protocol. A token is a special bit pattern that travels from node to node in a network, giving the node exclusive access to the network for transmitting its message. According to the topology one may distinguish betwen token-bus and token-ring protocols. In CSMA/CD systems the transmitting nodes detect overlapping transmission if two or more nodes attempt to transmit on a shared line.

### 10.5.4 FIELD BUS

DCS systems developers and users both realised that standardised interconnection is needed below the control system LAN and below individual controllers at the level of field mounted equipment such as transmitters and actuators. The ISA SP 50 functional guidelines define two systems:

H1. This application area is intended to address a digital replacement for existing 4—20 mA DC systems. It should also handle contact signals. The existing wires limit selection of the carrier band to a relatively low frequency (2200 to 9600 Hz).

H2. This application area is intended to extend the H1 concept as it may be applied to high performance systems, including high speed logic applications. An end-to-end bus length of 750 m is recommended.

The European developers intend to develop a field bus which has up to 1500 m length including extensions up to 32 drops, has a version for hazardous areas, and speeds from 19.2 kbit/s to 1 Mbit/s. The lower speed is for two wire lines with multi-master data communication. Leading manufacturers want to develop PROFIBUS with a similar specification [10.8].

Field instrumentation has many analogue devices which are usually cabled directly to the control centres. Field multiplexers are sited next to the field devices and information is transferred by the field multiplexer to the control center via only four conductors. The reduction in cabling is substantial, being up to 90%.

## 10.6 CONTROL SOFTWARE

Digital controllers and computers can operate only with the appropriate software. The difficulties of writing control programs were underestimated during the first period of control computer application, which resulted in high additional costs

and delays. With the increasing number of applications and the amount of experience gained, many design aids have been developed and several special control programming languages are available. If the program is fixed and incorporated in the hardware, it is usually called firmware. The characteristic of computer control is that there is no sharp dividing line between the tasks performed by hardware and software. The first task in designing control software is the selection of control algorithms [10.6], [10.7].

### 10.6.1 CONTROL ALGORITHMS

The sequence and logic of rules and calculations for the solution of a problem is called an algorithm, after the Arab mathematician Al Quarizmi. The control algorithm serves control purposes. Mathematical descriptions of control modes for analogue controllers are well known (e.g. PID control). In addition to these, and their digital equivalents, a great variety of control modes can be applied, from two position control to complex state observer control or model reference control.

The development of a PID algorithm is shown as follows. The proportional-integral-derivative (PID) control mode is generally described by the following equation, where $y(t)$ is the position of the final control element and $e(t)=x_r-x_c$ is the error, the difference between reference value and controlled value ($P$, $I$, $D$ indices of $K$ are the coefficients for the $P$, $I$ and $D$ modes):

$$y(t)=K_P\left[e(t)+K_I\int_0^t e(t)\,\mathrm{d}t+K_D\frac{\mathrm{d}e}{\mathrm{d}t}\right]+y_s. \tag{10–1}$$

This equation has to be converted to digital form. A simple form with time constants is

$$y_n=K_P\left[e_n+\frac{1}{T_I}\sum_{\nu=0}^{n}e_\nu\Delta T+T_D\frac{e_n-e_{n-1}}{\Delta T}\right]+y_s, \tag{10–2}$$

where $\Delta T$ is the sampling time interval, $T_I$ the integral and $T_D$ the derivative time constants. In practical applications, refined integrating and differentiating algorithms are used. The above 'position algorithm' requires too much computing capacity, and a 'velocity algorithm' can be developed.

The difference between two consecutive valve positions can be computed as

$$y_n-y_{n-1}=\Delta y_n=K_P\left[(e_n-e_{n-1})+\frac{\Delta T}{T_I}e_n+\frac{T_D}{\Delta T}(e_n-2e_{n-1}+e_{n-2})\right] \tag{10–3}$$

and this difference, divided by the sampling time $\Delta T$, gives the required valve velocity

$$\frac{\Delta y_n}{\Delta T}=v_n=K_P\left[\frac{e_n-e_{n-1}}{\Delta T}+\frac{1}{T_I}e_n+\frac{T_D}{\Delta T^2}(e_n-2e_{n-1}+e_{n-2})\right]. \tag{10–4}$$

Table 10.3. Control algorithms in DCS
(Honeywell TDC 3000)

| | |
|---|---|
| Manual output | Ratio |
| PID normal | Selector override |
| PID external reset feedback | Switch |
| PID with feedforward | Ramp soak |
| Incremental summer | Timer |
| Lead/lag | Counter |
| Variable dead time (with lead/lag and summer or multiplier) | CL control algorithm |
| Rate compensation | Logic control algorithms |
| Auto manual | null |
| Summer | truth table |
| Multiplier divider | comparator |
| | sequencer |

An adaptive control algorithm can easily be applied to achieve optimal control performance. In some cases the actuator of the final control element can be used as an integrator, since it maintains its previous position and needs only to be informed how far it must move from its last position. Digital controllers and control systems have several preprogrammed control algorithms which can be selected in the configuration procedure. A typical list of control algorithms is shown in Table 10.3. Advanced control algorithms are implemented in most of the modern control systems.

### 10.6.2 OPERATING SYSTEMS AND INTERRUPTS

Control computers, like all other computers, need an operating system or executive. Control computers require a real time monitor which is part of the real time operating system. Control computer vendors generally supply real time multitasking operation systems (e.g. Siemens RMOS) as do systems houses (e.g. Heuristics, Onspec Concurrent PC-DOS).

A modular operating system includes the following:

interrupt handling,
process dispatching,
synchronisation,
communication,
time scheduling,
input/output handling,
initialisation,
test and measurement, etc.

Computations can be grouped into foreground and background tasks, the first group being executed in real time for process control while the second group includes batch programs for optimisation, balance calculation, scheduling, equipment supervision, etc.

Chemical process control has to be taken into consideration in the development of operation systems, as shown by Käärmees, Motus and Numuela [10.11]. A special feature, the program interrupt, is characteristic of control computers. Internal and external interrupts can be distinguished. Different sources of signals can be defined: the time signal is internal, while manual commands and alarm signals are external interrupts. Several layers of interrupts are defined and all signals are assigned priority numbers according to their importance to the process operation and safety. A higher ranked event can interrupt a program running at a lower priority. The functioning of an interrupt system can be observed in Fig. 10.18. A standard program (1) is running when an event of higher importance occurs and interrupts its running. The second program is executed until a top priority signal interrupts it and the third program is executed. After finishing this task, the computer jumps to the second program and at its end, to the first one. If a lower priority signal comes in during a high priority program run, the computer will store it until the task is ended. There are several refinements of programming which eliminate collisions, too frequent jumps, etc.

### 10.6.3 PROCESS CONTROL LANGUAGES

The development of high level languages and language extensions for real-time applications produced a number of process control languages. There are various national and international standardisation activities to standardise these languages in the same way as is done for conventional applications. Most of this work is done by IFAC/IFIP and ISO technical committees and working groups.

Several national control languages have been developed and partly standardised. In Germany the PEARL (Process and Experiment Automation Realtime Language) is accepted. CORAL 66 was developed in the UK military service and later

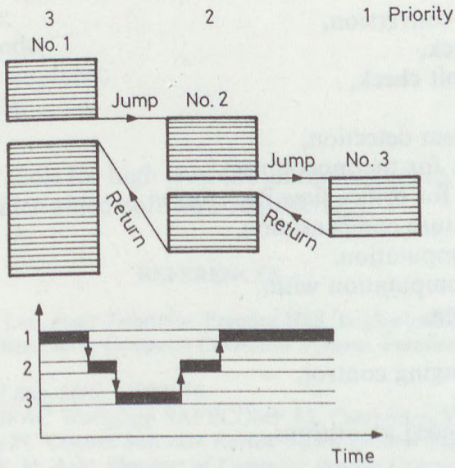


Fig. 10.18 Interruption of computer programs

standardised. LTR (Language Temps Réel) was first used by the French Navy and then extended to other applications. RTL/2 (Real Time Language) was first developed by Imperial Chemical Industries in the UK for application in chemical plants. Among the most commonly used languages are ADA, MODULA, FORTH, RT Pascal, RT Basic, and C. Process data base management capabilities are also required. Easiest to handle is the defined format, so-called 'Fill-in-blanks' programming, offered by the major control systems vendors.

Control engineers have started to use personal computers for process control, either directly or through a PLC or a PID controller. Software houses offer many program packages for supervision, design and analysis, statistical control, automatic controller tuning, etc. (e.g. ONSPEC control software, Heuristics, Loopworks by Equinox Data Co., Intune by Control Soft Inc. all USA) [10.5]. Simple programming languages for PLC programming are supplied with the equipment. A special method developed for the representation of sequential automatic control is the GRAFCET method (ADEPA, France).

### 10.6.4 CONTROL PROGRAMS

In this Section we shall not present all available control programs, because that would require an entire book. Symposia are held by IFIP–IFAC on Software for Computer Control (SOCOCO), where technical and scientific problems are discussed. The task of the application engineer is not to develop control programs but to apply them.

Modern control programs are user-friendly and can be used interactively. Many standard parts and subroutines are in firmware delivered with the hardware. Connecting the modules is called configuration. A control program usually contains the following subroutines:

Input signal conditioning with:
- sampling,
- engineering unit conversion,
- validity limit check,
- rate changing limit check,
- digital filtering,
- high and low alarm detection,
- linearisation (e.g. for thermocouples),
- square root (e.g. for orifice flow metering),
- pressure-temperature compensation,
- average value computation.

Control function computation with:
- setpoint processing,
- ratio setting,
- setpoint rate changing control,
- bumpless transfer,
- P, I, D and advanced algorithms,
- anti-windup,
- dead time compensation,

function generator,
signal selector, etc.
Output function processing:
control output rate change limit,
control output Hi/Lo limit,
auto-manual transfer.
Maintenance and diagnostic functions,
Data reduction and archiving,
Data base management,
Data retrieval and graphical presentation,
Graphic packages.
Finally the expert systems for process control have to be mentioned [10.9].

Large program packages are used for process and plant monitoring and management. Details of such programs depend on computer configuration, control system and process type.

### 10.6.5 SOFTWARE DEVELOPMENT TOOLS

The development of a microprocessor based measuring or control system requires the use of a development system, a MSDS. This system needs a computer with auxiliary equipment and adequate software packages. In earlier times each manufacturer developed its own engineering and development system, but several turnkey systems are now available.

There are eight principal steps in a microprocessor software development system, whatever the particular computing resources:

— record specification;
— preparing operator's manual;
— creating programming structure;
— writing source code;
— generating object code;
— linking object code modules;
— verifying object code;
— test with hardware.

Software development tools for high level programming are to be found under the heading CASE (computer aided software engineering).

### REFERENCES

[10.1] Anderson, T., P. A. Lee: *Fault Tolerance*. Prentice-Hall, Englewood-Cliffs 1981.
[10.2] Aström, K. J., B. Wittenmark: *Computer Controlled Systems*. Prentice-Hall, Englewood-Cliffs 1990. 2nd ed.
[10.3] Bailey, S. J.: *Control Eng*. 36(6), (1989) 76.
[10.4] Baylis, J. A. (Ed.): IFAC Workshop SAFECOMP 83, Cambridge, Pergamon, Oxford 1983.
[10.5] Control Engineering PC Control Software Review Series. *Control Eng*. 36 (11), (1989) 82.
[10.6] Deshpande, P. B., R. H. Ash: *Elements of Computer Process Control with Advanced Control Applications*. ISA/Wiley, Research Triangle Park 1982.

[10.7] Eckelmann, W., W. Hoffmann: *Regelungstechn. Praxis* 25 (4), (1983) 423.
[10.8] Eifert, G., K. Keuthen: *Automatisierungstechn. Prax.* 29 (5), (1987) 209.
[10.9] Foster, H. and co-workers: *Meas. Control* 21 (6) 1988.
[10.10] Johannsen, G.: *Automatisierungstechn.* 35 (10), (1987) 385.
[10.11] Käärmees, K., L. Motus, V. Numuela: *IFAC/IFIP Symp. on Software for Computer Control.* Tallin, 1976.
[10.12] Laduzinsky, A.: *Control Eng.* 29 (8), (1982) 53.
[10.13] Lukas, M. P.: *Distributed Control Systems: Their Evaluation and Design.* Van Nostrand, Reinhold, New York.
[10.14] Martinovic, A.: *CEP* 79 (2), (1983) 67.
[10.14a] Morari, M., E. Zafiriou: *Robust Process Control.* Prentice Hall Int., 1989.
[10.15] Morris, H.: *Control Eng.* 29 (1), (1982) 68.
[10.16] Sinha, N. K. (Ed.): *Microprocessor Based Control Systems.* D. Reidel Publ. Co./Kluwer Academic Publ. Norwell, MA. 1986.
[10.17] Syrbe, M. and co-workers: *Process Automation* (1), (1983) 18.
[10.18] Weiss, R.: *Process Automation* (2) (1983) 61.

CHAPTER 11

# INSTRUMENTATION AND MANAGEMENT OF CHEMICAL PLANTS

In large chemical plants consisting of several units the instruments and control systems are closely related to the management information systems. The whole complex has general problems of design, maintenance and operation. A review of these installations will be given.

## 11.1 INFORMATION MANAGEMENT

The use of powerful computer systems and data communication networks has aided the integration of plant automation and management. In the manufacturing industry CIM (Computer Integrated Manufacturing) is the trend which is followed. In the chemical process industries a similar trend is being followed, albeit with dfferent means and tools [11.11].

The effective management of a company or a plant is closely coupled to information management, because decisions require information processing. With modern electronic data acquisition and data processing methods new ways of information management have been opened up. The days of manual evaluation of recorder charts and the writing of daily reports by operators or laboratory personnel are over. The preparation of production and delivery schedules is aided by the computer in many plants. Earlier the plant management received daily reports from process plants and laboratories after considerable delay. The company management evaluated the reports and compared the market situation and production schedules, and made production planning arrangements. Reports from utilities management and storage or delivery management came separately. With a modern computerised management information system, all of the data mentioned can be collected and stored in a database. Management can call for all kinds of lists, graphs, diagrams and reports on a visual display. A hardcopy unit gives the possibility of copying the display. Production planning and optimisation are in general required to be centralised; process control and equipment supervision are usually decentralised. The level and form of centralisation has to be selected individually after thorough investigation. The principal factors are plant size, level of automation, number of measurements, safety, mechanisation of the equipment and materials handling, personnel, etc.

Digital data transmission enables the use of a single cable party line with appropriate transmission and receiving devices. The cabling cost can be drastically reduced but the equipment cost is increased. Optical cables are beginning to be used.

Information storage is another aspect of information processing. Recording on paper strip charts, log sheets and counters was the only means of data storage with conventional instrumentation. Printed lists, hardcopy, magnetic tape, magnetic and optical discs are the storage media in digital systems. The ease of rewriting on magnetic storage media enabled the recording of all measured data for 'post mortem' analysis. After data reduction and selection, long-term archiving takes place. Data retrieval with appropriate software is a part of the management information system.

Data reduction is not an easy task if the characteristic behaviour of the process has to be preserved. Simple averaging of the measured values over the desired time interval does not give the true picture of the process value changes, because the peak values are cut off. The trend record would give a smoother curve than the real curve. Special software is required for efficient data reduction. For evaluating information management requirements, the levels and hierarchy should be considered first.

### 11.1.1 HIERARCHY LEVELS

At the top is the corporate management level (5) with financial, costing and administrative functions. Next comes the site management level (4) with accounting, invoicing, engineering material ordering and customer order servicing functions. The plant management and coordination level (3) has the functions of production planning (scheduling), quality control with traceability if required (e.g. GMP, GLP), recipe management, inventory control, plant performance control. The 2nd level has three sections, the process unit supervision, the utilities super-

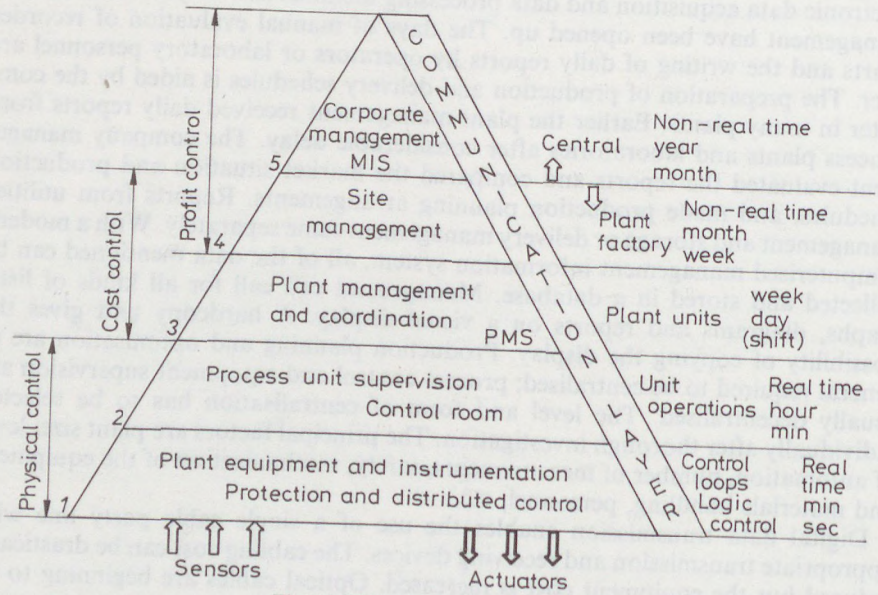


Fig. 11.1 Hierarchy levels of control

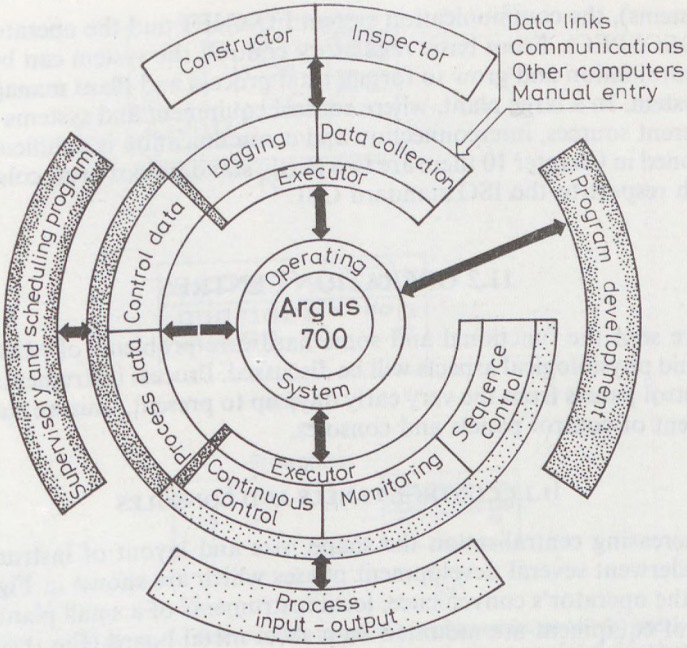


Fig. 11.2 Process management system structure (Ferranti)

vision and the warehouse/storage supervision, with process control, materials handling, inventory monitoring, energy conservation functions. The first level is the plant equipment and instrumentation level with the sensors, actuators, PLCs and regulators. In Fig. 11.1 the speed requirements of the various levels and their control objectives are shown. All levels are connected to the communication layer.

### 11.1.2 PROCESS MANAGEMENT SYSTEMS

Process management or plant management systems (PMS) emerged with the application of process control computers. Fig. 11.2 shows the structure of the PMS developed by Ferranti (UK) to the Argus 700 computer. PMS hardware and software are modular, constructed from standard well tried building blocks. Hierarchical control systems, either based on distribution or partly centralised subsystems, offer PMS capabilities. The TDC 3000 claims to be a 'totally integrated information and control system'. The functional integration of control and information helps the user to make operating decisions at all management levels. The architecture of the Honeywell DCS has been expanded and elements for plantwide information processing have been added. Gateways enable the linking of different data highways and computers to an integrated information system; data storage and computing power can be added, as well as a central operator station.

In Spectrum, Foxboro integrates its process management systems FOX 3 and FOX 1/A, several process control systems (SPEC 200 analogue and Microspec

digital systems), the communication system FOXNET and the operator workstation (VIDEOSPEC). From basic regulatory control, the system can be expanded to unit coordination and grow to form a total process and plant management and control system. In a large plant, where control equipment and systems are derived from different sources, interconnection and communication is a difficult problem. As mentioned in Chapter 10 there are two partly standardised protocols: MAP and TOP, with respect to the ISO standard OSI.

## 11.2 OPERATION CENTRES

We have seen the functional and some hardware problems of MMI, now the physical and physiological aspects will be discussed. Process instrumentation made use of control panels from the very early days up to present, thus we start with the development of control panels and consoles.

### 11.2.1 CONTROL PANELS AND CONSOLES

With increasing centralisation the shape, size and layout of instrument panel boards underwent several development phases which are shown in Figs 11.3 and 11.4. For the operator's convenience, local instruments of a small plant section or one piece of equipment are mounted on a sheet metal board (Fig. 11.3*a*) or in a

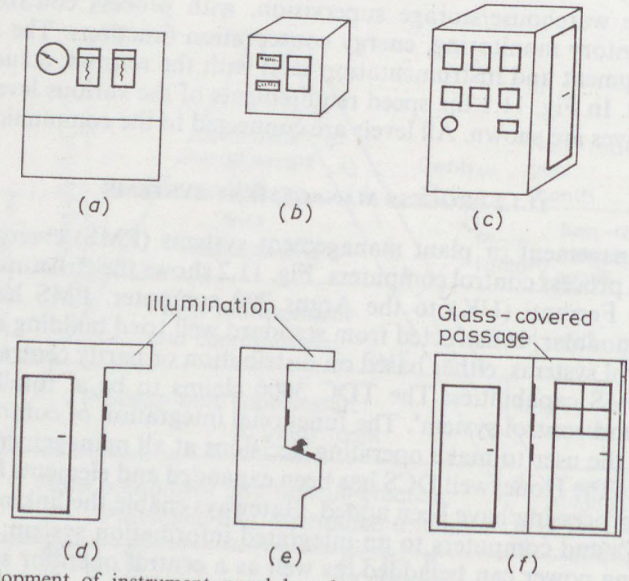


Fig. 11.3 Development of instrument panel boards. (*a*) sheet metal board; (*b*) instrument box; (*c*) cabinet; (*d*) instrument panel with illumination; (*e*) break-front panel; (*f*) instrument cabinet with corridor

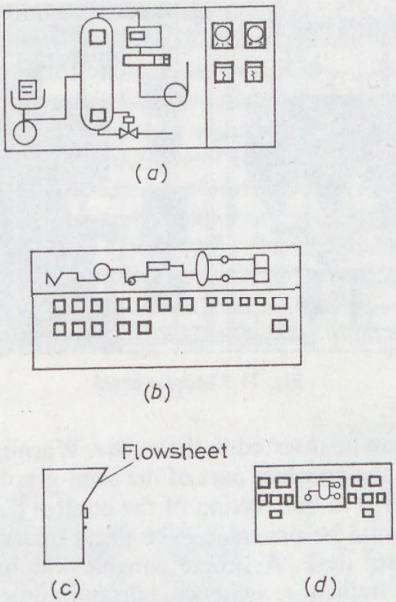


Fig. 11.4 Graphics panel types. (*a*) full graphics panel; (*b*) semi-graphics panel; (*c*) break-front semi-graphics panel; (*d*) mixed type graphics panel with static or projected flowsheet

sheet metal or plastic box (Fig. 11.3*b*). As the number of centralised instruments increased, self-supported, closed instrument panels were used (Fig. 11.3*c*). Stand-alone panels required self illumination (Fig. 11.3*d*) and in some plants they have to be pressurised to avoid corrosion and explosion hazards. If the operator has to manipulate push buttons and switches frequently, the control desk is combined with the panel (Fig. 11.3*e*) (breakfront panel). Where no separate control room is available, the control panel can be provided with a foreground passage (Fig. 11.3*f*).

Instruments in local panels and cabinets are directly connected to the sensors or process fluids. If a pressure recorder is connected to the steam header, then in the case of a failure the instrument panel can be damaged by hot steam. This danger is eliminated with the use of transmitters. In central control rooms only pneumatic and/or electric signals can be used. With increasing size and complexity of process plants, the number of measured and controlled parameters also increases. Difficulties in the starting up period of complex processes led to the invention of graphics panels and miniature instruments (Fig. 11.4*a*). Rapid developments made this layout unacceptable and the semi-graphics panel was developed, which is a very successful solution of the control panel layout problem. Some examples are shown in Fig. 11.4*b, c, d.*

If technological changes are expected, the raster structure may have advantages. Fig. 11.5 shows a 'mosaic' graphics panel. Symbols, lamps, instruments, push

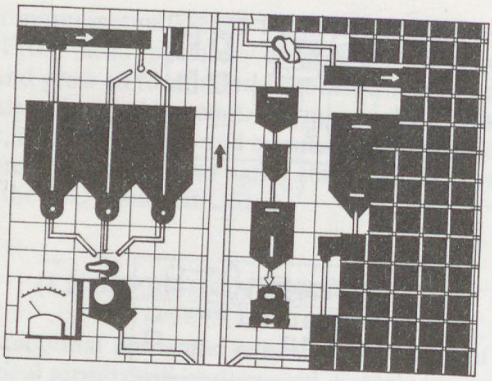

Fig. 11.5 Mosaic panel

buttons or void pieces can be inserted in the raster. Warning lights from the alarm system can be placed in the graphics part of the semi-graphics panel. Annunciator panels can be incorporated in one section of the control panel or console. Reserve space for expansion should be provided. The plant operator sits by an operator console (POC) or control desk. A simple console was usually equipped with a multipoint temperature indicator, switches, telecommunication facilities, eventually with an in-plant television monitor. This picture has changed with the application of digital electronics. The VDUs appeared in the control rooms and later on the plant floor.

All digital control systems include CRT displays on the process operator console, thus eliminating conventional instruments and panels. The philosophy of display application and the structure of monitoring software can best be explained with the aid of Fig. 11.6. The operator has an overview of the whole plant if he is sitting before a full instrument panel. The same overview has to be provided by the display. Up to 240 points can be displayed in most systems, in groups of 8 or 12. The overview display gives a qualitative presentation of all points resident on the display. Deviations, either plus or minus, are shown by the length of the bars above or below a center line. Alarms are shown by the changing colour and flashing of the bars. Group displays provide a closer look at each of the groups of the overview. Eight or twelve simulated controller front panels are presented on the screen. This is an analogue of the situation when the process operator goes to the instrument panel and observes one group of instruments on it. The detail or loop display contains a highly detailed front panel of a controller with a listing of all important parameters, and in some systems a time curve of the controlled parameter. Tuning, as well as changing the set point and alarm limits, are possible via the keyboard. The same task is done in conventional analogue systems at the panel board on the controller itself. Instead of the semi-graphics panel, a process flowsheet can be presented on the display. An overview graphics display and area graphics displays with process flowsheets and numerical data can be provided. Actual values of the measured parameters can be presented on the VDU. A special alarm display will include the list of alarm points, date and time of occurrence, type of alarm and alarm group identification. Some systems provide alarm group

displays for alarm scanning. Displays are replacing the recorders, giving various trend records with variable time scales and bar graphs.

A special engineer's console is provided in some systems for process development, maintenance, fault detection, software debugging, etc. If process and plant management are coupled to the control system, additional displays are provided. For safety reasons the minimum number of CRTs in a process operator console is two, but most of the system vendors recommend three, which is considered as a standard for large systems. The ergonomic design of displays and POCs has been investigated by several authors [11.7], [11.8], [11.12]. Some results of these investigations are worth considering from the point of view of the user. The number of colours which can definitively be distinguished depends on the viewing angle. Smaller angles mean less colour. Considering the dimensions of consoles and

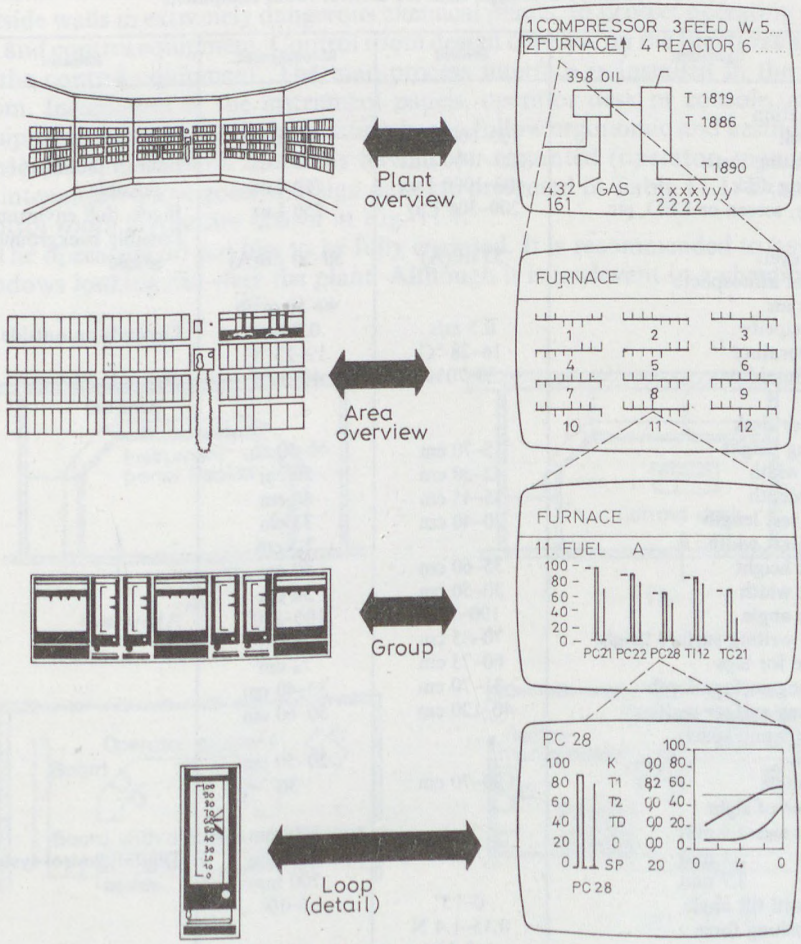


Fig. 11.6 Display system for control

displays, it is not recommended to apply more than 4—5 different colours. Redundant information is usually required to make allowance for colour blind people.

The use of symbols is very attractive, but it too has its constraints. Pictograms should be limited to 10—12 symbols. Letters and numbers may be used deliberately, but the size or shape of the letters should be restricted to at most 3 different types. Light brightness, flashing frequency and alarm sound levels should be of not more than two distinct grades. Theoretically three grades can be distinguished, but in the case of an alarm (or other) situation it may cause uncertainty if the operator has to decide whether the sound alarm signal is high, middle or low frequency or magnitude, etc. The same is true for brightness, line width, and letter size. Response time and human reaction time have to be adapted to each other. Long response times result in feelings of frustration. Vibration or flickering of the picture

Table 11.1. Design data for control room equipment

| Equipment | Allowed | Recommended | Remarks |
|---|---|---|---|
| Illumination | | | |
| general | 100–500 Lux | 300 Lux | |
| indicating instr. | 200–1000 Lux | 500 Lux | Indirect illumination if possible |
| writing desk | 400–1000 Lux | 750 Lux | |
| Display, screen or LED, etc. | 200–300 Lux | 250 Lux | Black, dull environment |
| Noise level | 55 dB(A) | 30–50 dB(A) | Possibly background music |
| Ambient atmosphere | | | |
| fresh air | | 40–50 $m^3/h$ | |
| air velocity | 0.5 m/s | 0.2 m/s | Depends on outside temp. |
| temperature | 16–28 °C | 19–23 °C | |
| rel. humidity | 30–70% | 40–50% | Depends on temperature |
| Operator desk | | | |
| sitting height | 35–70 cm | 40–50 cm | |
| seat width | 42–50 cm | 50 cm | |
| seat depth | 35–45 cm | 40 cm | |
| arm-rest length | 20–40 cm | 33 cm | |
| arm-rest width | | 7.5 cm | |
| back height | 35–60 cm | 50 cm | |
| back width | 30–50 cm | 50 cm | |
| back angle | 100–115° | 105–110° | Above seat |
| desk writing surface height | 70–85 cm | 78 cm | |
| space for legs | 60–75 cm | 72 cm | |
| writing surface depth | 31–70 cm | 35–40 cm | |
| writing surface width | 40–120 cm | 50–60 cm | |
| Manipulating space | | | |
| depth | | 20–50 cm | |
| tilt angle | 20–70 cm | 30° | |
| Distance of sight | | | |
| letter size 2.6 mm | | 500 mm | |
| 3.1 mm | | 600 mm | Digital control system screen |
| 3.7 mm | | 700 mm | |
| Keyboard tilt angle | 0–15° | 5–10° | |
| Key pushing force | 0.15–1.4 N | | |
| Safe key force | 6–8.5 N | | |

on the screen fatigues the eye of the operator. Great care has to be taken to install stable, flicker-free, good quality VDUs.

A logical and well-structured presentation of the data is of paramount importance. The Wolff diagram, shown in Section 1.4, is a special, ergonomically well-designed presentation (see Fig. 1.12). Human engineering deals with ergonomic aspects of instrument dials, control panels, displays and other equipment in the control rooms.

### 11.2.2 CONTROL ROOM LAYOUT

The central parts of control systems have to be installed in closed rooms. Process operators need a convenient workplace and the instruments, electronic equipment, computers and peripherals require clean rooms with appropriate air conditioning. Control rooms may be part of the plant building or they may be placed in a separate control building. This building may be totally enclosed with bunker type outside walls in extremely dangerous chemical plants, to protect operating personnel and control equipment. Control room design depends on the functions and type of the control equipment. The man-process interface is installed in the control room. Installation of the instrument panels, operator desk or console, auxiliary equipment, furniture and illumination has to follow ergonomic and aesthetic rules [11.1], [11.4]. The main functions have to be separated (operator, management, maintenance). Some general design data are presented in Table 11.1. Examples of control room layout are shown in Fig. 11.7.

The operators do not like to be fully enclosed. It is recommended to have large windows looking out over the plant. Although it is irrelevant in a chemical plant

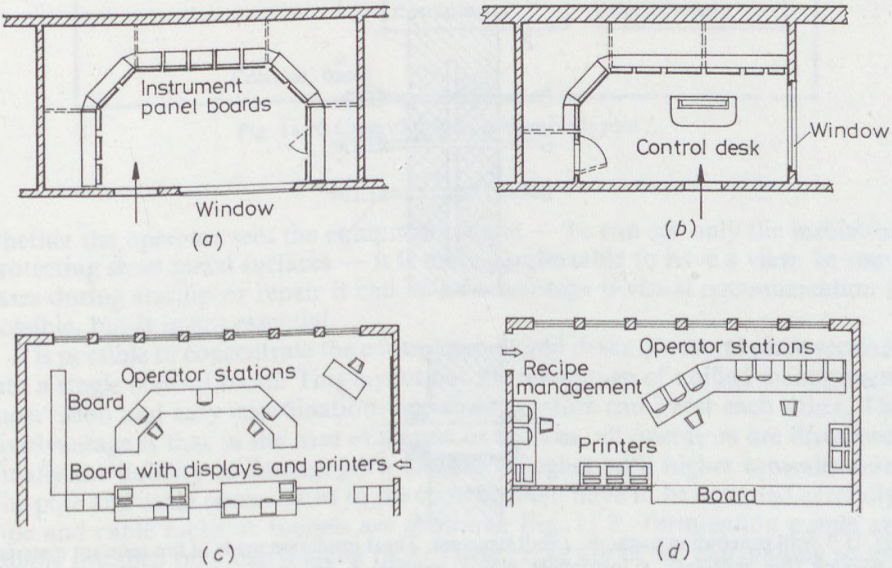


Fig. 11.7 Control room layouts

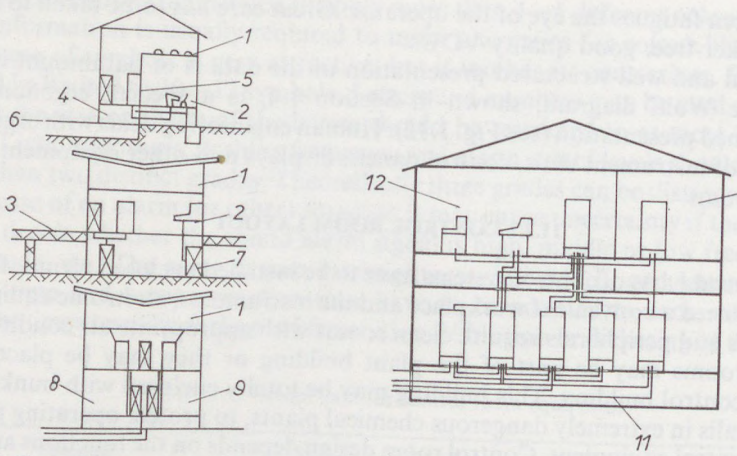


Fig. 11.8 Control room connections. *1* illumination; *2* control desk; *3* pipe rack; *4* pipe cellar; *5* instrument panel board; *6* cable tunnel; *7* marshalling and equipment racks; *8* store and workshop; *9* conveniences; *10* computer room; *11* cables; *12* process operator's desk in control room

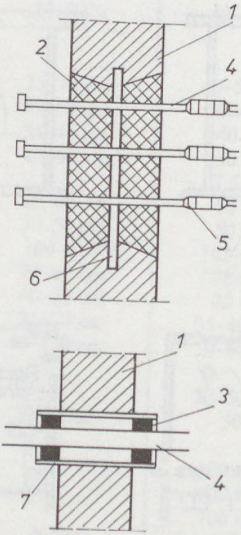


Fig. 11.9 Wall penetration methods. *1* wall structure; *2* heat insulation made of fire-resistant material; *3* packing (fire resistant); *4* instrument piping, cabling; *5* detachable connection; *6* steel plate; *7* protecting tube

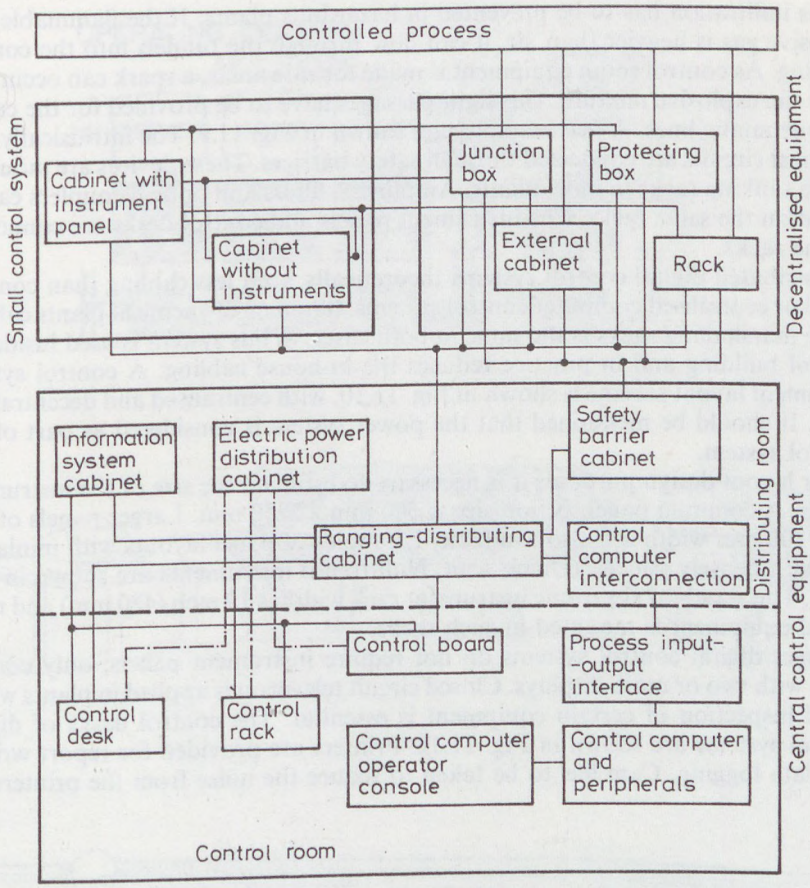


Fig. 11.10 Control system equipment layout

whether the operator sees the equipment or not — he can see only the insulation protecting sheet metal surfaces — it is more comfortable to have a view. In some cases during startup or repair it can be an advantage if visual communication is possible, but it is not essential.

It is possible to concentrate the control panels and desks of several plant sections into a single control room. This layout has the advantage of unified management supervision and easy coordination, and the operators can assist each other. The disadvantage is that in the case of alarms or failures, all operators are disturbed. Finally the liability of damage by a disaster is higher with higher centralisation. The pipe and cable connections to the control room have to be designed carefully. Pipe and cable racks or tunnels are shown in Fig. 11.8. Termination points are usually installed on a marshalling rack. These racks are in the marshalling rooms or cellars.

Gas infiltration has to be prevented in hazardous plants. If the flammable and explosive gas is heavier than air, it can flow through the tunnels into the control building. As control room equipment is made for safe areas, a spark can occur and ignite the explosive mixture. Gas tight passages have to be provided for the cables and pneumatic lines. A few examples are shown in Fig. 11.9. The intrinsically safe electrical circuits are connected through safety barriers. These devices are mounted on the ranking racks in most plants. Amplifiers, filters and optical couplers can be placed on the same racks. The instrument panels and control desks are connected via the racks.

Distributed digital control systems theoretically need less cabling than conventional or centralised computer control systems, but in most chemical plants cabling to the marshalling racks is the same in both cases. A bus system is used inside the control building and in practice reduces the in-house cabling. A control system equipment layout scheme is shown in Fig. 11.10, with centralised and decentralised units. It should be mentioned that the power system is considered as part of the control system.

For layout design purposes it is necessary to estimate the size of the instrument panels. A common panel section size is 600 mm × 2250 mm. Larger panels of 900 and 1200 mm width are also available. Examples of panel layouts with miniature and with densely packed (Quick-scan, Null-trend) instruments are shown in Fig. 11.11. The standard electronic instrument rack width is 19 inch (480 mm) and most digital equipment is mounted in such racks.

Direct digital control systems do not require instrument panels, only control desks with two or more displays. Closed circuit television is applied in plants where visual inspection of certain equipment is essential. The control desks of digital control systems are shown in Fig. 11.12. Printers are provided for report writing and data logging. Care has to be taken to reduce the noise from the printers.

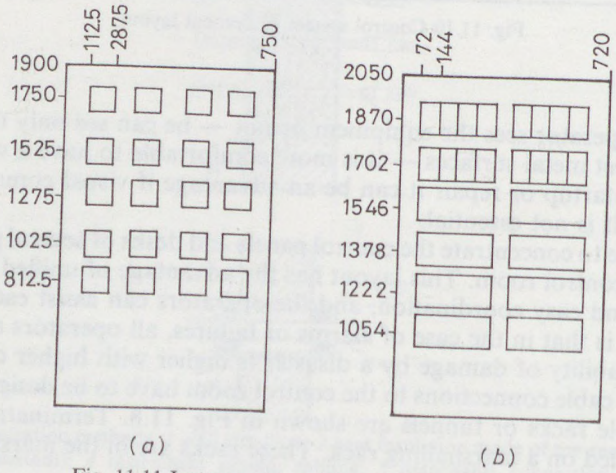


Fig. 11.11 Instrument panel board layout examples

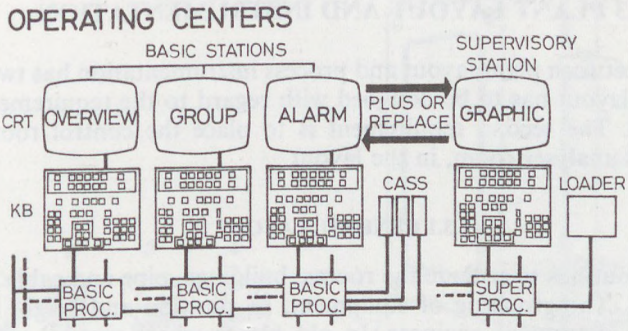


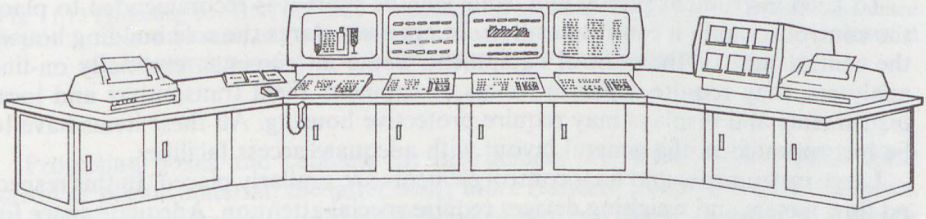

(*a*)

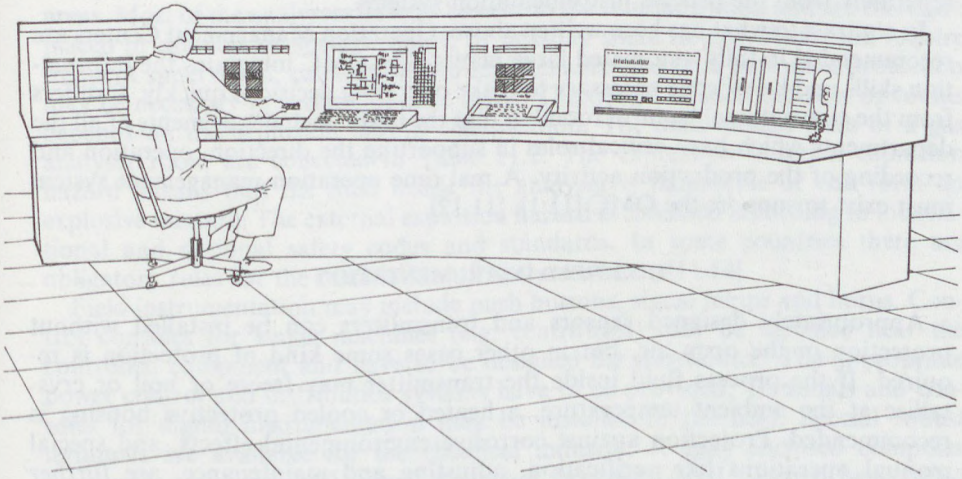

(*b*)

Fig. 11.12 Operator consoles. (*a*) Honeywell; (*b*) Foxboro

## 11.3 PLANT LAYOUT AND INSTRUMENTATION

The relation between plant layout and process instrumentation has two aspects. First, the plant layout has to be designed with regard to the requirements of the instrumentation. The second requirement is to place the control room, and if required the gas analyser room, in the layout.

### 11.3.1 GENERAL LAYOUT

The plant layout has to include the rooms, buildings, pipe and cable tracks for instrumentation. The grouping of equipment, its position and height should be checked by the instrument engineer. In old plants where manual operation is applied, pipes had to be conducted around the control room or corridor to allow valve manipulation. Telemechanics changed the scene and with it the layout of the plants.

To keep instrument piping and cable lengths short it is recommended to place the control room in a central position. In open air plants the sole building houses the central part of the control equipment. Some instruments, especially on-line analysers, may require separate rooms or cabinets. Field transmitters and local instruments and displays may require protective housing. All these items have to be incorporated in the general layout with adequate access facilities.

Large instruments and final control elements are similarly placed. In this respect pd flow meters and weighing devices require special attention. Adequate space for maintenance and verification has to be provided. Pipe racks, cable tunnels, etc., also have to be provided. The piping layout is subject to the rules of flow measurement (straight length tube sections). Space has to be provided for utilities (instrument air, hydraulic accumulator, electric power) and an instrument repair shop. Chemical laboratories and office computers or computer centres are installed separately from the process instrumentation systems.

In contrast to what has been written above, Operation Management Centers are recommended in fully automated large plants. The OMC integrates the information skills and knowledge necessary to make operating decisions quickly. It differs from the conventional 'control room' in that the OMC includes elements of all the departments which have critical roles in supporting the direction, operation and recording of the production activity. A real time operation management system must exist to support the OMC [11.1], [11.12].

### 11.3.2 FIELD INSTRUMENTATION

Appropriately designed sensors and transmitters can be installed without protection in the open air, but in other cases some kind of protection is required. If the process fluid inside the transmitter may freeze or boil or crystallise at the ambient temperature, a heated or cooled protective housing is recommended. Protection against corrosive environmental effects, and special manual operations like verification, adjusting and maintenance, are further reasons for utilising enclosures.

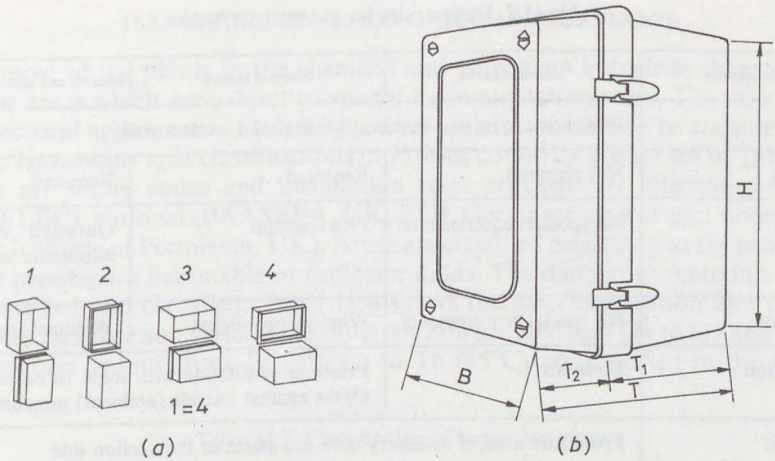


Fig. 11.13 Protecting box (INTERTEC). *1* instrument is mounted in part 1; *2* instrument is mounted in part 2; *3* and *4* the same but in horizontal positions. In cases *1* and *3* the instrument is protected without covering; in cases *2* and *4* the instrument is easily accessible from all sides

Protecting boxes and cabinets for instruments are manufactured from sheet metal or plastic material, the latter being more resistant to corrosive atmospheres. Fig. 11.13 shows a plastic instrument housing box and the ways in which it can be applied. Heating appliances can be provided for the box. Instrument cables and pneumatic pipes are connected in junction boxes occasionally to field multiplexers, which have to be installed in the field.

On-line analysers form a special group of field instrumentation. Severe rules and safety codes deal with the installation of gas and liquid analysers in hazardous areas. Most of the analysers have to be near to the sampling point and are therefore placed in cabinets or special rooms, or possibly small houses. Analysers require frequent supervision, calibration and maintenance and thus personnel protection may be necessary in certain climatic areas. The design of such cabinets or rooms depends on the explosion hazard classification. The main design rules of a gas analyser room are collected in Table 11.2. The expression 'internal explosion hazard' means that the fluid inside the analyser is flammable or can form an explosive mixture. The external explosion hazard is classified according to international and national safety codes and standards. In some countries there are obligatory rules for the installation of analyser rooms [11.14].

Field instrumentation may include push buttons, signal lamps and horns. Control consoles for single machines (e.g. centrifuges) may be installed near the controlled equipment and have to be designed for this service. The appropriate power control and distributior systems have to be provided. Terminals and consoles for digital instrumentation may be installed in the field. Special robust terminals are available for the chemical industry. A fully enclosed computer terminal in a stainless steel cover is produced. In general, VDUs have to be installed in clean and air-conditioned rooms. Final control elements are as a rule sited in the

Table 11.2. Design rules for gas analyser rooms

| Equipment | Internal hazard | External hazard | Internal and external hazard |
|---|---|---|---|
| Masonry | Fire resistant or non-combustible material, cutless wall | | |
| Air-lock | Not required | Required | Required |
| Doors | No special requirements | Fire resistant | Outward opening, automatic and sealing doors |
| Windows | No special requirements | Window prohibited | Window prohibited |
| Ventilation | Fresh air | Fresh air ventilation with some 10 Pa pressure excess against outside (ambient) pressure | |
| Fresh air | From safe area, if necessary with gas alarm at the suction side | | |
| Air circulation | 5 × hourly | No special requirement | 5 × hourly |
| Ventilation failure | Automatic alarm in the control room, automatic shutdown of the non-explosion-proof instruments | | |
| Switching on non-explosion-proof equipment | From outside (externally) | | |
| Illumination | Explosion-proof installation is required with internal switching | | |
| Telephone, alarm | Explosion-proof equipment and installation | | |
| Sampling lines for flammables | To be closed externally | No | To be closed externally |
| Entry points for pipes and cables | Gas-tight passing through bushing and flame resistant packing | | |
| Gas cylinders, gas pressure and flow controllers | Outside GAR externally installed | No | Outside GAR externally installed |
| Fire extinguisher | According to local rules internally or externally | | |

*Key:* GAR = Gas Analyser Room.

field and consequently the actuators, valve positioners and field controllers must be capable of withstanding plant environmental effects. Heating or cooling of the control valves may be necessary.

For installation and maintenance of the various parts of the control system, catwalks, ladders and other facilities are necessary. Manholes for underground installations should be of the same type and layout, to facilitate orientation in emergency conditions.

### 11.3.3 INSTRUMENTATION OF HAZARDOUS PLANTS

In most of the plants in the chemical and petroleum industries there are hazardous areas which are subject to special instrumentation rules. The safety codes for electrical apparatus — including control systems — have to be considered first [11.3]. Hazardous area classifications in various countries are shown in Table 11.3. There are safety codes and installation rules accepted by international (IEC, CENELEC), national (BAASEFA, UK; PTB, Germany; etc.) or user bodies (API, USA; Institute of Petroleum, UK). Areas are classified according to the probability of the presence of flammable or explosive fluids. The dangerous materials have to be identified and classified. Table 11.4 shows the gas classification and the temperature classification systems. Various ignition groups from G1 to G5 and various temperature groups from T1 (450°C) to T6 (85°C) are specified in the systems.

Table 11.3. Classification of hazardous areas

| Country or organization | Explosion hazard due to flammable gases and vapours mixed with air | | | Explosion hazard due to powder of dust and fine particles | |
|---|---|---|---|---|---|
| | Explosive mixture continually present or present for long periods | Explosive mixture can occur in case of failure | Explosive mixture not likely to occur and will exist for a short time only | Present continuously or frequently | Is likely to occur intermittently |
| IEC | Division 0 | Division 1 | Division 2 | | |
| UK | Division 0 | Division 1 | Division 2 | | |
| Germany | Zone 0 | Zone 1 | Zone 2 | Zone 10 | Zone 11 |
| Hungary | Degree 1 | Degree 2 | Degree 3 | | Degree 4 |
| USA and Canada | Division 1 | | Division 2* | | |

* Flammable fluids are normally within closed systems, from which they can escape only under abnormal operating or fault conditions.

Table 11.4. Classification of gases and ignition temperatures

| Representative (test) gas | IEC Countries | | | | | | USA and Canada |
|---|---|---|---|---|---|---|---|
| Acetylene | Group IIC | | | | | | Class I, Group A |
| Hydrogen | Group IIC | | | | | | Class I, Group B |
| Ethylene | Group IIB | | | | | | Class I, Group C |
| Propane | Group IIA | | | | | | Class I, Group D |
| Metal dust | | | | | | | Class II, Group E |
| Carbon dust | | | | | | | Class II, Group F |
| Flour, starch, grain | | | | | | | Class II, Group G |
| Fibres and flyings | | | | | | | Class III |
| Temperature classification | T1 | T2 | T3 | T4 | T5 | T6 | |
| Maximum surface temperature | 450 | 300 | 200 | 135 | 100 | 85 °C | |

*Remark:* The temperature classification system is universally accepted.

Several modes of protection are accepted as standard (e.g. European Norm EN50014) functioning on the basis of three different principles:

(*i*) To prevent the explosive mixture coming into contact with those parts of the equipment which could initiate an explosion, the methods are
— oil immersion (symbol *o*), EN 50015;
— pressurised apparatus (symbol *p*), EN 50016;
— powder filling (symbol *q*), EN 50017.

(*ii*) To prevent an explosion inside the apparatus igniting the explosive mixture in the environment, a flameproof or explosion proof enclosure is provided (symbol *d*). This enclosure withstands the pressure of the explosion and has appropriate narrow and remote openings to achieve expansion and cooling of the exploded gas (EN 50018).

(*iii*) To prevent explosion by limiting the available electrical energy to an intrinsically safe level (symbol *i*) (EN 50020).

The third method is very popular for instruments and control systems, because it is relatively cheap and convenient and gives inherent protection without any reliance on enclosures, ventilators, switches, etc. The technique of intrinsic safety originated in England for mine signalling, and its acceptance in the chemical and petroleum industries was implemented after difficult discussions.

An intrinsically safe system can be divided into three parts:

safe area equipment,
safety interface,
hazardous area equipment and cabling.

All intrinsically safe equipment is designed and certified to meet three criteria, which are

area classification,
gas classification,
temperature classification.

The equipment is marked to display its safety status. For instance: EEx ia IIC T4, where EEx stands for explosion protection to European standards. If the equipment is certified for location in safe areas only, a square bracket is used [11.9]. Safety barriers are inserted between safe and unsafe area equipment. Long cables will store a certain amount of energy, so the certificate for an interface always specifies the maximum values of capacitance and inductance that are permitted for the associated cables. Earthing has to be specified with special care, to avoid incidental sparks between conductors at different potentials.

All intrinsically safe devices have to be painted blue or made of blue coloured material. The application information has to be followed because of the many rules (e.g. EN 50020, EN 50039; BS 1259; ISA RP 12.2).

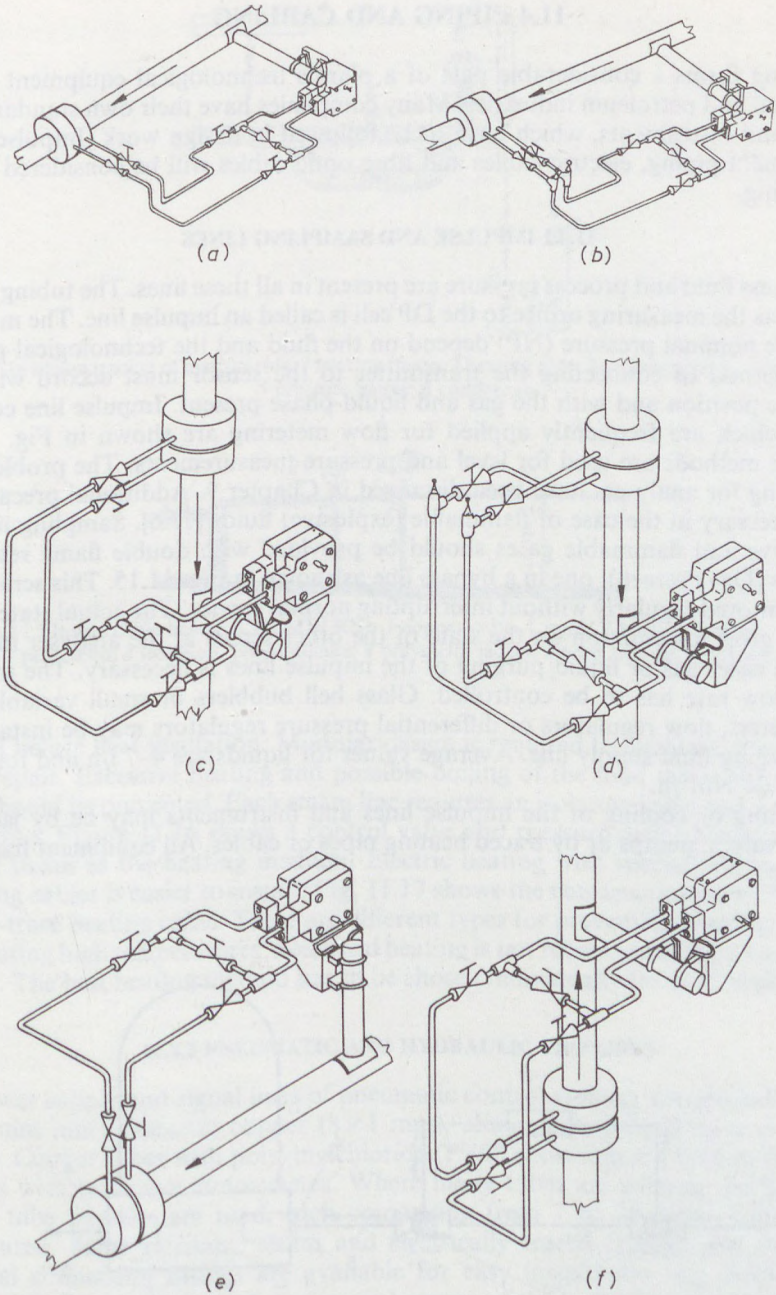


Fig. 11.14 Impulse lines for flow metering with orifice device. (*a*) liquid flow, horizontal pipe; (*b*) steam flow, horizontal pipe; (*c*) liquid flow, vertical pipe; (*d*) steam flow, vertical pipe; (*e*) gas flow, horizontal pipe; (*f*) gas flow, vertical pipe

## 11.4 PIPING AND CABLING

Piping forms a considerable part of a plant's technological equipment in the chemical and petroleum industries. Many companies have their own standards for pipes and instruments, which have to be followed in design work. Impulse lines, instrument piping, electric cables and fibre optic cables will be considered in the following.

### 11.4.1 IMPULSE AND SAMPLING LINES

Process fluid and process pressure are present in all these lines. The tubing which connects the measuring orifice to the DP cell is called an impulse line. The material and the nominal pressure (NP) depend on the fluid and the technological piping. The method of connecting the transmitter to the sensor must accord with the relative position and with the gas and liquid phase present. Impulse line connections which are frequently applied for flow metering are shown in Fig. 11.14. Similar methods are used for level and pressure measurements. The problems of sampling for analysers have been discussed in Chapter 9. Additional precautions are necessary in the case of flammable (explosive) fluids [11.6]. Sampling lines of corrosive and flammable gases should be provided with double flame retention devices (Davy screen), one in a bypass line as shown in Fig. 11.15. This screen can be monitored regularly without interrupting normal service. The actual state of the device gives information on the state of the other screen at the analyser inlet. In certain cases gas or liquid purging of the impulse lines is necessary. The purging fluid flow rate has to be controlled. Glass bell bubblers or small variable area flowmeters, flow regulators or differential pressure regulators may be installed in the purging fluid supply line. Average values for liquids are 4–7 l/h and for gases 0.03–0.04 $Nm^3/h$.

Heating or cooling of the impulse lines and instruments may be by jacketed pipes, valves, pumps or by traced heating pipes or cables. All equipment has to be

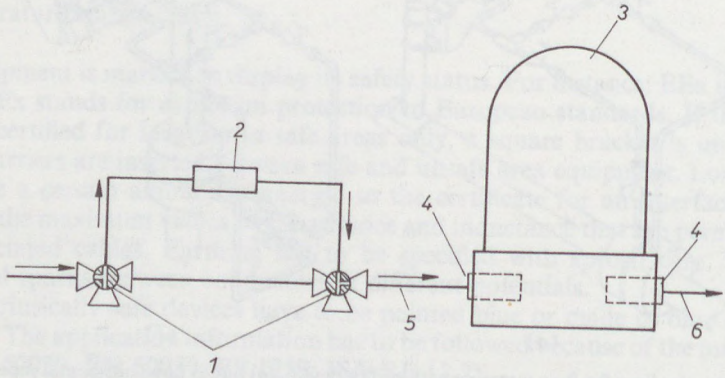


Fig. 11.15 Safety screen for gas sampling line. *1* three-way valve; *2* control flame lock; *3* explosion-proof gas analyser; *4* flame lock; *5* sample inlet; *6* sample outlet

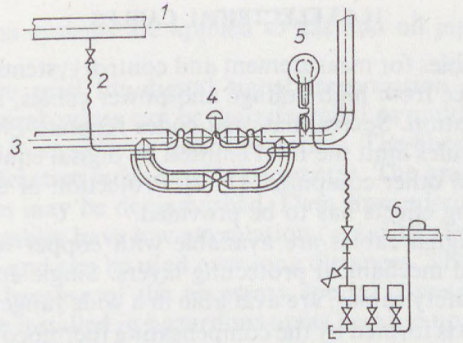


Fig. 11.16 Steam tracing of instruments. *1* heating steam; *2* heating pipe; *3* process pipe; *4* control valve; *5* pressure gauge; *6* condensate

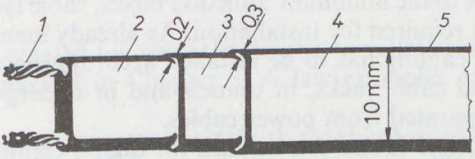


Fig. 11.17 Electric cable heater (CHEMELEX). *1* copper cable 1 mm$^2$; *2* heating element, stabilised polyolefin; *3* isolation, polyurethane; *4* polyolefin jacket; *5* wire armour protection

tested before heat insulation. Modular design is required to facilitate dismantling and repair. Excessive heating and possible boiling of the fluid inside the impulse line should be prevented. Each steam line requires an isolating valve and a condensate trap. Figure 11.16 shows a control valve and pressure gauge heating system using steam as the heating medium. Electric heating with special self-regulating heating cables is easier to install. Fig. 11.17 shows the construction of a Chemelex Auto-trace heating cable. There are different types for preventing freezing and for regulating high temperatures. Electrical heating is not recommended for hazardous areas. The best heating method has to be chosen individually for each application.

### 11.4.2 PNEUMATIC AND HYDRAULIC PIPELINES

Power supply and signal lines of pneumatic control systems are generally made of 6 mm inner diameter copper (8 × 1 mm), aluminium, polyethylene or PTFE tubes. Copper tubes with polyvinylchloride (PVC) sheathing are used in chemical plants with corrosive atmospheres. Where many tubes are running on the same trace tube bundles are used, each comprising from 7 to 37 pipes. Light type, armoured, flame resistant, steam and electrically traced bundles are available. Special connecting fittings are available for easy installation (e.g. ERMETO). Hydraulic lines are made of steel pipes because of the high pressure and because hydraulic fluids are in general not corrosive. Pipe and cable supports are prefabricated for quick installation.

### 11.4.3 ELECTRICAL CABLES

Electrical signal cables for measurement and control systems have to be protected against interference from high voltage and power cables, magnetic fields, and electromagnetic radiation. Several national codes regulate EMI (electromagnetic interference). These rules limit the EMI emitted by digital equipment, to eliminate the effects of EMI on other equipment [11.2]. Protection of the electronic equipment against lightning effects has to be provided.

Several types of signal cables are available with copper wire conductors and various shielding and mechanical protecting layers. Single and multicore cables, and flame resistant safety cables, are available in a wide range of sizes. A separate group of signal cables is formed by the compensating thermocouple extension wires and cables. Each type of thermocouple has its own type of extension wire. Solid conductor wires are insulated and twisted in pairs for maximum noise rejection. These cables are relatively expensive and of high electrical resistance, so their length should be kept to the minimum. Junction boxes, cable ladders, fasteners and other accessories are required for installation. As already mentioned, intrinsically safe and flameproof cabling has to be installed according to special rules. When installed on pipe and cable racks, in tunnels and in underground ducts, signal cables have to be separated from power cables.

Two types of electrical cables can be used for digital communication:

— twisted pair wires, with low attenuation, suitable for long distances, relatively cheap but prone to noise; transmitting ~10 Mbit/s.
— coaxial cables, with high attenuation restricting them to short distances, provide noise immunity but special connectors are required; transmitting ~360 Mbit/s.

### 11.4.4 OTHER COMMUNICATION LINES

Signal transmission through electromagnetic radiation (radio waves) is used for mobile equipment for remotely located transmitters and final control elements when wireless transmission is cheaper than cable installation. Micro-

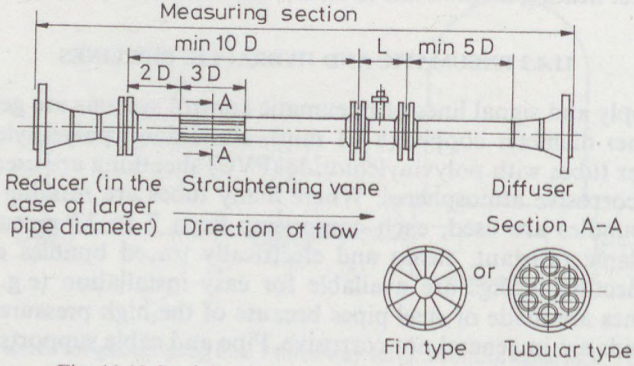


Fig. 11.18 Straightening vane installation (MMG-AM)

wave communication systems are applied to gas and oil pipeline telemechanical systems.

Optical cables are used for digital signal transmission and for light sensor extension. Fibre optical guides can be manufactured as multimode or single mode (monomode) cables from glass or plastic materials. The fibre categories (IEC 793) are based on the refractive index profile parameter. The graded index, quasi step and step index types may be distinguished. Data transmission rates are up to 10 Gbit/s. Fibre optic cables have low attenuation ($\sim$1 dB/km) total external electrical noise immunity, and can be used over long distances. They have a high cost of installation, partly because of the necessary special connections and interfaces. Optical cable can be installed in hazardous areas because no electric current flows through the cable.

## 11.5 INSTRUMENTS IN TECHNOLOGICAL PIPE NETWORKS

The design rules created for sensor and valve installation in technological pipe networks are summarised in Chapter 3. A few examples of installation will be shown here.

In flow metering it is important to establish a stable flow pattern on the upstream side of the sensing element whether it be an orifice, a Pitot tube or a turbine. Engineering handbooks and standards contain the recommended lengths of straight pipe upstream and downstream of the sensing element. Values between 12 and 30 D (pipe diameter) are recommended for orifice type sensors, according to the ratio of diameters and fitting. Turbine type and Woltmann meters require an average straight pipe of approximately 10 D. In the upstream straight pipe no valves, bends, or thermo-wells can be introduced. If the circumstances do not permit such a length, straightening vanes have to be installed. Fig. 11.18 shows a measuring section for a turbine flowmeter (Turboquant, MMG-AM). For details, see the literature [11.5].

Positive displacement flowmeters require no straight pipe, but other rules have to be considered to avoid erroneous measurement. Because the PD meter does not distinguish between liquid and gas, care has to be taken to ensure gas separation and to avoid gas bubble formation. Mechanical parts of the PD meters can be damaged by solid particles, so a strainer has to be installed upstream. The narrow tolerances of the instrument require fine filtering. Fig. 11.19 shows an LPG measuring station. According to official measurement rules, the pressure in the downstream pipe should be higher than the saturation pressure in the supply line and in the liquid gas tank by at least the equivalent of 15 K. This pressure is controlled by a differential pressure regulator. The liquid level is controlled in the gas separator. Constant recirculation can be used, but this involves a differential pressure regulator in the gas line. It can be seen from these examples that close cooperation between pipe network designer and constructor and the instrument engineer and constructor has to be achieved if inaccurate measurement and control is to be avoided.

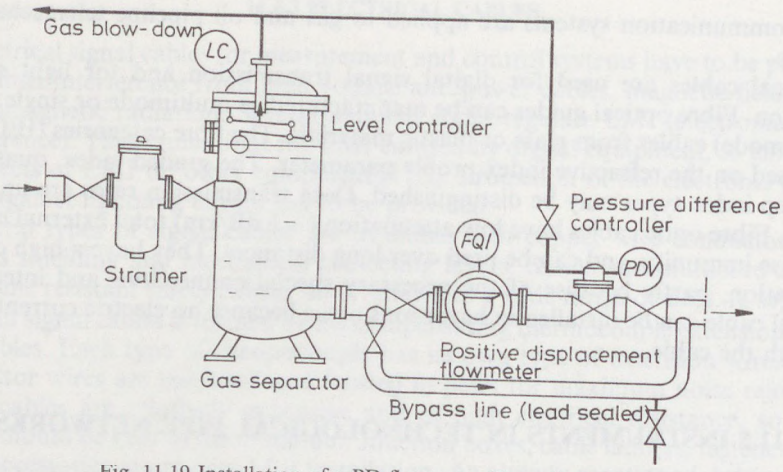


Fig. 11.19 Installation of a PD flowmeter (Bopp & Reuther)

## 11.6 UTILITIES FOR CONTROL SYSTEMS

Transmitters, controllers and final control elements need energy for operation. We have seen that pneumatic, hydraulic and electrical control systems can be applied. Until recently, many publications dealt with the selection of optimal control systems and addressed the question of electronic or pneumatic control. With the general acceptance of digital control systems, there is now no real alternative. The computer and the central control desk with CRT displays cannot be hydraulic or pneumatic. The valve actuators, on the contrary, can be of any type. The pneumatic control valve with spring and diaphragm actuator is still the cheapest solution, especially in hazardous areas. For single valves where no pneumatic air supply is available, an electric actuator may be economical.

### 11.6.1 PNEUMATICS

Pneumatic instruments and control systems operate with compressed air, or sometimes with nitrogen gas. A compressed air supply has to be provided in a plant with pneumatic instrumentation. Air compressors, with the necessary filters, coolers and drying equipment can be centralised or decentralised in each section of the plant. Centralisation has many advantages and therefore it is recommended to install a central air supply centre for compressed air instrumentation.

Pneumatic instruments generally require an inlet pressure of 1.4 bar gauge. Pressure in the supply pipe network should not be less than 2 bar gauge, but for safety reasons it is between 3 and 7 bars gauge in most plants. Some actuators require 3 or 4 bar gauge pressure, and pneumatic logic systems generally operate with 6 bar gauge air. Clean, dry, instrument air, free of dust and oil, has to be supplied. Instrument air quality is specified in several standards (e.g. ISA S 7.9). Dust particle size should be less than 3 micron, oil content less than 0.3 mg/m$^3$ or

1 ppm. The dew point is usually given to specify dryness. Air for indoor or outdoor service has different criteria; usually 10 K below the lowest ambient temperature is sufficient. This means −30°C for outdoor service in Central Europe. Air can be dried by cooling, absorption or adsorption. Adsorbers are mostly used. Two types of adsorbers are in common use, the conventional hot air regeneration type and pressure alteration 'heatless' type dryers. A scheme of the first type is shown in Fig. 6.19, and a heatless dryer in Fig. 11.20. The cycle time of this latter type is approximately 1.5 min for adsorption and 1.5 min for desorption. An automatic cycle controller opens the valves for regeneration and shuts them for adsorption. It has to be noted that regeneration also requires energy in the heatless dryers (in this case, compression work). The properties of various adsorbents are presented in Table 11.5. In the last column CaCl on charcoal is shown for comparison, but this is not used any longer because of the associated corrosion hazard.

The oil content can be filtered out by special filters, but it is better to use oil free compressors. Air compressors with graphite or Teflon rings need no lubrication and deliver oil free compressed air. Membrane or screw compressors and turbo-compressors can be used as well. Buffer air reservoirs can be installed in plant sections, to avoid sudden instrument air supply failure in the event of power failure. The size of the reservoir can be calculated from the air consumption of the

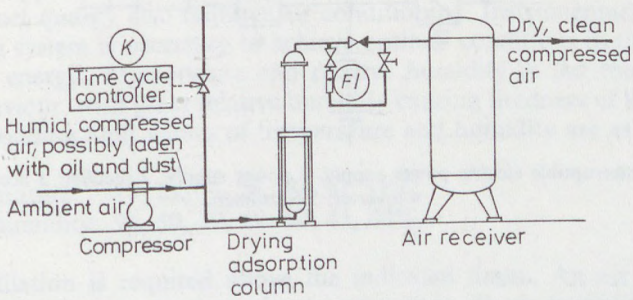


Fig. 11.20 Heatless air dryer

Table 11.5. Air drying substances

| Characteristic values | Activated alumina | Silica gel* | Molecular sieve | CaCl on charcoal |
|---|---|---|---|---|
| Air humidity after drying, g/m³ | 0.119 | 0.385 | 0.0082 | 0.87 |
| Dew point, °C | −39 | −28 | −78 | −20 |
| Drying effectiveness, % | 99.13 | 97.19 | 99.94 | 94.1 |
| Maximum air temperature, °C | 50 | 55 | | |
| Adsorbing capacity mass: $gH_2O$/100 g adsorbent | 7.5 | 11.5 | 90 | 28 |
| volumetric: $gH_2O$/100 cm³ adsorbent | 7.2 | 9.05 | 21 | 8.4 |

*Remark:* All values are calculated for air of 20 °C temperature and 80% relative humidity (water vapour content 13.68 g/m³).
* Activated silicic acid.

control system and the time required for safe plant shutdown. An estimated repair time may be calculated, too. Average values are 25 to 40 minutes. When the electrical power supply to the compressors is not assured, engine driven compressors may be installed. An average consumption of 1 $Nm^3/h$ per loop can be assumed for supply system design. The effective consumption under steady-state conditions is less.

Instrument air filters installed upstream of pneumatic instruments protect the equipment from damage caused by possible contamination of instrument air. Low pressure pneumatics should also be mentioned, which are even more susceptible to contaminants.

### 11.6.2 ELECTRICAL POWER SUPPLY

Electronic instrumentation and computer control systems require power supplies which are not subject to interruption. A serious problem occurs during a complete power loss. Blackouts can be caused by the utility company, especially during periods of heavy power usage, and longer periods of power loss can occur

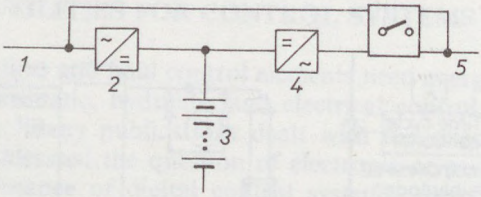


Fig. 11.21 Uninterruptible electric power supply. *1* power supply; *2* rectifier; *3* accumulator plant; *4* inverter; *5* consumers

due to storms or accidents. Typical power line disturbances, apart from total loss of voltage, are oscillatory transients, voltage spikes and undervoltages. Control systems have to be protected against large disturbances.

Direct current supplies can be switched to batteries. Alternating current demands can be met by a second alternative source of supply using an engine driven generator, or with the aid of batteries kept charged by a motor driven generator but converted to AC by an inverter. Modern interruption-free power supply units consist of a battery charger, a battery and an inverter. Fig. 11.21 shows the scheme of an uninterruptible power supply (UPS). During normal operation the UPS keeps the battery at maximum charge and when a power failure occurs, the inverter converts the DC battery power to AC; details can be found in the literature [11.13]. The battery backup required can be calculated from the power consumption and shutdown duration. Another point to consider is the switching time, which cannot be too long because the computer system experiences a power loss during this period. Distributed local battery backups can be used to preserve the contents of volatile memories.

### 11.6.3 HYDRAULIC POWER SOURCES

Hydraulic fluids may be mineral oil, silicon oil or water. All have some disadvantages; oils are combustible and prone to decomposition, water is corrosive and may freeze in outdoor service, silicon oil is expensive. The viscosity of hydraulic fluids is an important property which is generally related to temperature. The lubrication property has to be evaluated, too. The pressure source in a hydraulic system is usually a gear pump or a piston pump. Power supply stations with oil tank, motor driven pump, safety valve filter and pressure regulator are available as prefabricated units. Backup can be provided with a hydraulic accumulator with gas pressure load. Early systems used mechanical accumulators. Accumulators are widely used on plastic moulding machines, both for safety reasons and to meet peak load demands. If an uninterrupted electrical power supply is provided the hydraulic pump drives can be connected to it. Steam driven pumps can be used in special plants.

### 11.6.4 AIR CONDITIONING

In many chemical and pharmaceutical plants heating, cooling, ventilating and air conditioning are important requirements. Computer rooms require air conditioning although most minicomputers can be operated under normal office conditions. Application of air conditioning depends on the climate. In several plants product quality also requires air conditioning. Instrumentation of the air conditioning system is necessary to achieve optimal conditions in the rooms and to conserve energy. Temperature and relative humidity in the rooms influence human behaviour, with great relative humidity causing tiredness of the personnel. The corresponding limit values of temperature and humidity are as follows:

Air temperature: 17, 21, 23, 26, 29, 30, 31°C.
Relative humidity: 90, 80, 70, 60, 50, 45, 40%.

Forced ventilation is required above the indicated limits. An air conditioning system including heaters, coolers, circulating pumps, filters, humidifiers and ventilators is a small process plant in its own right, and it too, should be instrumented and controlled [11.10].

Special air conditioning control systems have been developed by several instrument manufacturers. A relatively simple example is shown in Fig. 11.22. Inlet air flowing through a filter is mixed with recirculated air and blown through a heater (or cooler) into the humidifying chamber. Water spraying is applied and after a droplet filter, the air blower blows humidified air through a heater into the air duct system. The air is practically saturated in the humidifying chamber. Saturated air is heated to the desired temperature, controlled by (TIC-2), thus obtaining air with a predefined humidity. The water spray can also serve for air cooling. Where the winter temperature is cooler and the summer temperature warmer than the desired room temperatures, split-range control is applied (TIC-1). Energy conservation requires air recirculation, and only a part of the air is exhausted. The relative humidity is measured (QT-3) and controlled through a temperature control. Air circulation can be manipulated with the dampers and controlled by inlet or outlet

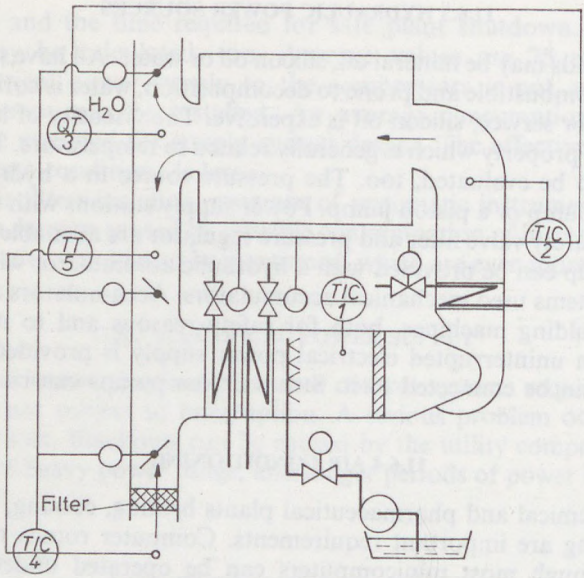


Fig. 11.22 Control of an air conditioner

temperature (TIC-4) and humidity. Control system design analysis can be aided by the enthalpy–concentration ($i$–$x$) diagram of air. Better control can be achieved if the disturbances are compensated for; thus ambient temperature, solar radiation and wind effects are included in the control system. An outdoor temperature sensor can be installed in a small box with inner heating. When the wind blows the box is intensely cooled, while if the sun shines the box is heated by radiation absorption. Feed-forward control can be applied.

It should be mentioned that some instrument manufacturers specialising in air conditioning, heating and ventilating instrumentation use their own technical vocabulary. This does not always agree with the standard expressions, and some confusion is likely in the specification of such systems. This is especially severe if the control system is not specified by instrument engineers.

## REFERENCES

[11.1] Baber, Ch.: *Speech Technology in Control Rooms Systems.* Ellis Horwood, Chichester 1991.
[11.1a] Bergmann, J.: *Z. msr* 26 (4), (1983) 182.
[11.1b] Beuchelt, R. et. al.: In NAMUR Statusbericht 87. *Automatisierungstech. Prax.* Sonderheft 1987, p. 235.
[11.2] Bogar, J., Ph. Dobrogowski: *Instrum. Control Syst.* 55 (6), (1982) 33.
[11.3] Calder, W., C. Ernest: *Electrical Safety in Hazardous Locations.* ISA Research Triangle Park 1984.
[11.4] Charwat, H. J.: *Automatisierungstech. Prax.* 29 (2), (1987) 58.
[11.5] Code of Practice for Instrumentation in Process Control Systems. *British Standard 6739,* 1986.
[11.6] Cornish, D. C., G. Jepson, M. J. Smurthwaite: *Sampling Systems for Process Analysers.* Butterworths, London 1982.

[11.7] Grimm, R.: *Regelungstech. Prax.* 26 (4), (1984) 153.
[11.8] Herb, S. M.: *Instrum. Control Syst.* 57 (5), (1984) 45.
[11.9] Hutcheon, I. C.: *Meas. Control* 22 (4), (1989) 108.
[11.10] Junker, B.: *Klimaregelung* (2nd ed.). Oldenbourg, Munich 1984.
[11.11] Kellogg, M. W.: *Process Eng.* 12 (1987) 29.
[11.12] Sapita, R. F.: *Process Eng.* 7 (1987) 55.
[11.13] Shaw, W. T.: *Instrum. Control Syst.* 57 (3), (1984) 33.
[11.14] Stieler, W.: *INTERKAMA Kongr. 1980,* Ernst, D., M. Thoma (Eds), Springer, Berlin, 1980, p. 656.

CHAPTER 12

# ECONOMIC EFFECTS OF INSTRUMENTATION

It is a primary objective of process instrumentation and plant automation to achieve economic results at company or national level. Security of human life and safety of property is one of the first goals of instrumentation. Process automation can result in a reduction in the number of operating personnel, savings in materials and energy, protection of the environment, quality assurance and uniform product quality, maintenance cost savings, increase of equipment lifetime, reduction of capital costs, increase of production and production of higher grade products.

To evaluate the effects of instrumentation the expenditures have to be compared with the benefits. A control engineer has to calculate the optimum level of automation. When the labour force is a limiting factor, automation of batch processes can be advantageous. With reduced personnel the plant can be operated in two or three shifts per day instead of one with manual operation. In continuous plants the material and energy savings have more effect on economy than the labour cost. With advanced optimisation programs, computer control may have a great influence on plant economy. Economic calculations need estimates of the costs of instrument installation, maintenance and operation, and the economic effect of automation has to be known. There are also benefits which are not exactly quantifiable, such as better management information, quick and accurate balance calculations, etc.

Process instrumentation is not a negligible part of a chemical plant. In order to give the reader a picture of the order of magnitude, a few data will be quoted. In the early German Democratic Republic the chemical industry was the largest buyer of instruments, with 25% of the whole national consumption. In Western Europe and the Middle East nearly 50% of industrial sensors went to the chemical and petroleum industries. In 1973 a single mid-range chemical company (VEBA Chemie) operated approximately 20,000 instruments, among which were 2000 controllers, 4000 recorders, 3300 control valves and 700 analysers. In 1981 Royal Dutch Shell, in one of its complexes used, nearly 900 analysers, among them more than 100 gas chromatographs.

## 12.1 CAPITAL EXPENDITURE

Investment cost is the first figure needed for cost-benefit calculations. Two methods can be used to determine investment cost: the budget method and the estimation method. In the first case an instrument and equipment list is required, and prices have to be calculated and added. In the second case instrumentation cost

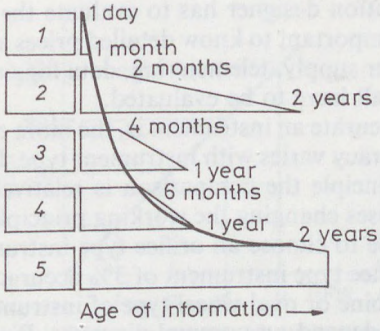


Fig. 12.1 Obsolescence of price information. *1* vendor's quotation; *2* user company's files; *3* price lists; *4* chamber of commerce or trade associations; *5* literature, textbooks

is estimated from technological equipment cost or total plant investment expenditure by percentage factors, evaluated from previous installations. The cost of instrumentation consists of purchase price, delivery, insurance, design, installation, testing and calibrating costs.

### 12.1.1 INSTRUMENT PRICES

Collecting instrument price information is not an easy task because of the elapsed time between the first feasibility study cost estimation and level of automation calculation and the final delivery documentation. Catalogue prices and quotations of previously purchased instruments are valuable but may not be regarded as reliable sources. The general trends of price changes are forecast by several institutes and periodicals. Well-known price indices are published by Chemical Engineering (USA), or Costimator in Process Engineering (UK), Chemische Industrie (Germany), etc. Estimation aids and diagrams help in the quick determination of prices [12.2], [12.7].

To appreciate the value of price information a diagram is shown in Fig. 12.1 which is typical, although it was published in 1971. The situation changes with the availability of computer data banks and on-line product information systems. There are cost estimating data bases and related software available on floppy disc which run on PCs (e.g. Questimate by Icarus Corp. UK). The British Telecom has established an instrumentation information service INDEXi where the principal data of the instruments and control systems of various vendors are available on line. Prices are usually increasing with time due to inflation. There are several price indices published in various periodicals. The Nelson–Farrar index (Oil and Gas J.) is an example. Instrumentation prices are not following the trend established by total price index, as the following data show

| Year | 1962 | 1973 | 1985 | 1987 |
|---|---|---|---|---|
| Total N-F index | 237 | 468 | 1297 | 1370 |
| Instruments | 214 | 335 | 713 | 744 |

A control system application designer has to evaluate the cost effect of his decisions, and it is therefore important to know detailed prices and consequences of the decision. Accuracy, power supply, telemetering, data logging and recording, reliability costs and benefits all have to be evaluated.

In general, the more accurate an instrument is, the more expensive it is. The ratio of purchase price to accuracy varies with instrument type. In process instrumentation working on one principle the comparison is relatively easy, but higher accuracy means in many cases changing the working principle. In flow metering, for example, it is not possible to choose an orifice type instrument of 0.2% accuracy instead of a standard orifice type instrument of 3% accuracy; instead, the type has to be modified and a turbine or oval-wheel type of instrument has to be specified. The price difference will depend on nominal diameter. Pipe diameter makes only a slight difference in orifice type meter prices, because the DP cell, receiver, indicator, integrator and recorder prices do not change. But a PD meter price increases considerably with pipe size. Accuracy depends in some cases on calibration. A standard variable area flowmeter (rotameter) has $\pm 2\%$ accuracy, but if the same type is individually calibrated with higher accuracy, it is sold for a higher price. Calibration and maintenance expenses increase with accuracy.

The selection of a given type of controller has cost consequences in analogue control systems. A P controller is cheaper than a PID controller. In digital control systems there is no difference between control modes, since an average digital controller has 16 to 26 different algorithms built in and it can be configured without extra cost. Complex computations and advanced algorithms may occupy more than one pcb or 'slot', which means higher cost. Reserves have to be provided. A good orientation value is 10 to 30% reserve for inputs and outputs and 30 to 50% reserve in data processing capacity. The estimation of control computer system costs has a special difficulty, because there are two categories of prices. The OEM (Original Equipment Manufacturer) prices include only the hardware prices. A computer system price includes basic software and an undefined part of the application software. Another problem is the rapidly changing price/performance ratio. Essential innovations are introduced every year in this field. Reliability has its cost effects in two respects. First, a reliable fault-tolerant instrument or control system is in general more expensive than a standard, less reliable one. The first group is formed from special safe systems with redundant instrumentation. The economy of reliability can be calculated and an optimum found [1.13].

### 12.1.2 INSTALLATION COSTS

Installation includes the design and prefabrication of several items for field mounting as follows:

— instrument panel boards, cabinets;
— control consoles, desks;
— relay and equipment racks;
— wiring of panels and consoles;
— auxiliary equipment in the panels;

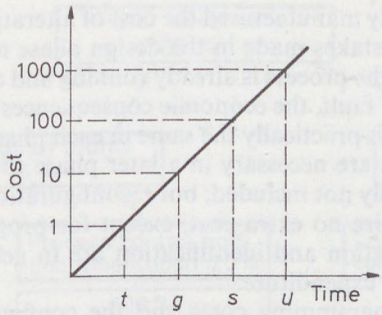


Fig. 12.2 Cost effect of alterations. *t* Design stage; *g* manufacturing stage; *s* installation (construction) stage; *u* start-up period

— pipe and cable networks including junction boxes, fasteners, power relays, heating, etc.;
— mounting of the instruments and controllers;
— annunciator and trip system installation;
— installation of sensors and final control elements in the pipes and in the equipment;
— pressure tests, isolation tests, cable resistance; inductance and capacitance measurements;
— heat insulation, painting, scaffolding.

There are various estimates for the installation factor, which shows the ratio of instrument purchase cost to installation cost. An average value of 50% was valid in Hungary. The installation costs of single instruments may vary considerably. A direct acting temperature controller lies lower than the average but a mass flow controller with computer connection lies above it. Installation factor estimates have to be revised frequently because hardware prices and specialised staff wages change differently. Analyser and computer rooms may need air conditioning, air ducts and ventilators, special fire extinguisher systems and cabling space.

### 12.1.3 DESIGN AND PROGRAMMING EXPENDITURE

Engineering expenses like design, consulting and computer program development are considered parts of the capital expenditure.

Instrumentation design cost depends on the grade of automation and overall instrument cost. It usually lies between 15% and 22% of capital cost. A new type of cost factor is the programming of PLCs and control computers. Instead of designing a relay system with all necessary drawings, the PLC can be programmed with the aid of a programming device and neither wiring nor drawings have to be made. Consequently, the design cost components have changed. The application of PLCs has many advantages and one of them can be estimated from Fig. 12.2. It can be seen that the consequences of a sequence change or a mistake at an early stage are not expensive. A change in the commissioning phase increases costs, while

if the equipment is already manufactured the cost of alteration is high. Elimination during installation of mistakes made in the design phase means very high expenditure and time delay. If the process is already running and a shutdown is necessary because of a relay system fault, the economic consequences may be very great. The alteration cost of a PLC is practically the same in each phase. If additional sensors or final control elements are necessary in a later phase their cost and time delay consequences are naturally not included, but reconfiguration, change of sequences and time constants require no extra cost, except for programming. Systems engineering, process simulation and identification are in general considered as research and development expenditure.

Control computer programming costs and the configuration costs of digital control systems are in practice design costs. It has to be mentioned that program documentation is in many cases dependent on the supplier and is not supplied according to any fixed standards. Instruction manuals are delivered with the equipment. Many digital control systems have self-documenting facilities.

### 12.1.4 ANALYSIS OF THE COSTS

Instrumentation costs can be analysed in several ways. A cost analysis of a conventional control system, for orientation purposes, is as follows:

| | |
|---|---|
| Sensors and transmitters | 15% |
| Amplifiers, controllers | 10% |
| Final control elements | 20% |
| Panels, consoles | 14% |
| Secondary instruments | 14% |
| Appliances | 13% |
| Connections, communications | 14% |
| | 100% |

Computer control systems were frequently analysed in the 1970s and different calculations have been published but these have all been rendered obsolete with the advent of microprocessors.

Many publications have appeared on the computer hardware/software cost ratio. A rapidly increasing cost percentage due to software has been prophesied. In early computer control systems, software work was underestimated and huge time delays and overheads resulted. Experience gained with many systems made a reasonable programming cost ratio possible [12.3]. Fig. 12.3 shows the cost breakdown of a typical chemical plant. Training expenditures must finally be mentioned (see Section 12.5).

### 12.1.5 REPAIR SHOP AND AUXILIARIES

There are several investment costs related to instrumentation. Buildings and rooms required for the instruments are part of the instrumentation costs, together with the power supply, air dryer and battery group. A maintenance and repair shop is necessary for the safe operation of the instruments and control systems. Chemi-

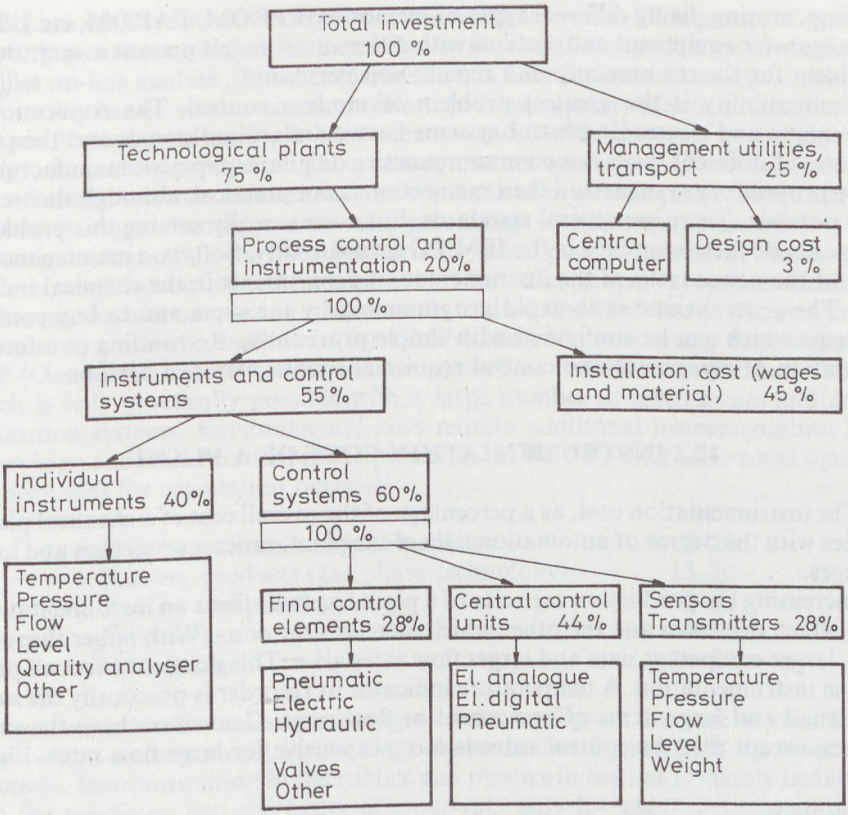


Fig. 12.3 Cost break-down

cal and petrochemical plants usually have large and well equipped instrument departments. Their job is not only preventive maintenance and calibration of the instruments but also the development of new control methods, the improvement of automation and the development of new analysers. It is interesting to note that the chemical industry has had a leading role in analyser development. The first infrared gas analysers (URAS) and thermomagnetic oxygen analysers were developed by German chemical plant staff. Special oil refinery analysers have been developed by the Shell Co. and other analysers by Du Pont Co., etc. After the instruments were generally accepted, mass production was transferred to instrument manufacturers.

The changes in process control equipment have meant changes to the equipment necessary in the maintenance and repair shops. Consequently the personnel has to be altered. The general use of computers, microprocessors, digital techniques, integrated circuits, semiconductor sensors, and related equipment requires special instruments for diagnostics and repair. The use of computer technology requires programming facilities, microprocessor development systems and equipment for

writing, erasing, fixing different types of memories (EPROM, EAROM, etc.). The data transfer equipment and systems with different protocols present a very tough problem for the maintenance and repair shop personnel.

Compatibility is the greatest problem of modern control. The conventional pneumatic and electronic control systems have standardised signals and the connection of different types is a commom practice. Digital equipment manufacturers have propriatory systems and their connection is not practical, although theoretically possible. There are several standards, but none is really solving this problem. The only de facto standard is the IBM PC compatibility. Software maintenance is one of the newer tasks of the instrumentation departments in the chemical industry. The general trend is to avoid programming by the users and to buy control systems which can be configured with simple procedures. Retrofitting and reconfiguration of equipment and control require adequately trained personnel.

## 12.2 INSTRUMENTATION COST OF A PLANT

The instrumentation cost, as a percentage of the overall cost of a chemical plant, varies with the degree of automation, size of the plant, process properties and local factors.

Increasing the production capacity of a plant has two effects on instrumentation; one which decreases and the other which increases the costs. With larger throughput, larger equipment sizes and larger flow rates arise. This does not affect all parts of the instrumentation. A temperature indicator or recorder is practically the same for small and large items of equipment or flow rates. Controllers have the same prices, except that the control valve is more expensive for large flow rates. Flow-

Table 12.1. Instrumentation subfactors as a function of main plant item capital cost (Prices at Jan. 1987)

| Case | Instrumentation subfactor | Individual main plant item cost (£) | | | | | | |
|---|---|---|---|---|---|---|---|---|
| | | <1 800 | 1 800–3 600 | 3 600–12 000 | 12 000–24 000 | 24 000–60 000 | 60 000–180 000 | >180 000 |
| 1 | Three or more controllers and instruments | 1.38 | 0.96 | 0.77 | 0.60 | 0.43 | 0.33 | 0.18 |
| 2 | Two controllers and instruments | 1.14 | 0.79 | 0.60 | 0.45 | 0.33 | 0.20 | 0.13 |
| 3 | One controller and instruments | 1.00 | 0.65 | 0.49 | 0.34 | 0.22 | 0.13 | 0.09 |
| 4 | Local instrument only | 0.75 | 0.43 | 0.24 | 0.13 | 0.06 | 0.04 | 0.03 |

(Costimator, Process Engineering *69*, 1988)

meters are sensitive to flow range on the sensing side only. This group of instruments thus causes a relative decrease of costs. On the other hand, large throughput justifies on-line analysis. In small plants there is time for manual analysis because the time lag has no serious economic effect. In large capacity plants, production of off-specification product for 1 hour means considerable losses of materials and energy, decrease of production and a consequent economic loss. Closer supervision and advanced control methods may be economical in a large plant. These effects increase the instrumentation costs as a percentage to total equipment cost.

Energy conservation may require variable speed pumps instead of valves and this can result in control system capital cost increases. Legal aspects, too lead to an increase in instrumentation requirements and expenditure. In the pharmaceutical industry there are regulations for GMP (Good Manufacturing Practice) and GLP (Good Laboratory Practice). These regulations require the collection of data which is only practically possible with a large number of instruments and data acquisition systems. Environmental laws require additional instrumentation for supervision and closer control of the processes. In the following table some figures are presented for orientation purposes:

| | % |
|---|---|
| Pharmaceuticals and intermediates | 7–20 |
| Primary products (gas phase technology) | 13–20 |
| Rubber and plastics | 2–6 |
| Fertilisers | 6–15 |
| Oil refining | 14–20 |

The instrumentation costs as percentages of the total plant cost are shown. Processes which are conducted in buildings show smaller figures than the open air processes. Instrumentation in the rubber and plastics industries is mainly included with the machines, and the figure given counts only for plant instrumentation.

The Lang factor is a rapid but approximate means of capital cost estimation for complete plants. The modified Lang factors apply to parts of a complete plant and are usually more accurate than the overall factor. Instrumentation costs as parts of main plant items (MPI) are listed in Table 12.1, based on the cost of carbon steel equipment. A single individual factor can be applied to the relevant main plant item cost to obtain its installed cost. Instruments and control systems are usually excluded from the individual installation factors on the ground that their costs will be determined more by their number, function and type than by the cost of the main item. This is generally tempered by the variation in sizes and hence in costs of control valves insofar as they are functions of throughput. There was formerly a difference between the degree of automation of continuous and batch chemical plants, but this difference is disappearing with the application of digital control systems.

## 12.3 MAINTENANCE AND OPERATING COSTS

The economy of automation is affected by maintenance and operating costs. The investment cost of a repair shop has already been mentioned. Maintenance costs depend on instrument reliability and maintenance personnel. A large English

chemical company analysed its instrument maintenance costs in 9 plants and found annual values between 8.7 and 14.9% of the instrument value. Similar figures have been found in five American chemical plants (7.5–16.3%). In Germany an annual value of 10% is generally accepted. Individual deviations are expected where highly corrosive and/or abrasive materials are handled.

Computer aided planning is used for preventive maintenance. In some plants the 'degree of complexity' is determined for each type of instrument. A standard pressure gauge receives the value 1 and the other instruments are classified according to their maintenance requirements relative to the pressure gauge. If the cost factor and time factor of the unit are established, the maintenance requirements of the plant can be calculated. Instrument manufacturers are striving to produce maintenance-free and maintenance-friendly equipment. An ISA survey has shown a 25% reduction in maintenance costs in 10 years. On-line analysers require considerable maintenance and calibration time. It is not uncommon to calculate 100 man-hours per year per analyser. To reduce this figure, self-diagnosis and self-calibration have been developed [9.13].

Energy supply cost is calculated as part of the operating costs of instrumentation. Energy absorption by valves and orifices can be calculated if large flows and pressure drops are involved. The pressure loss on a sharp edged orifice can be more than ten times that of a Venturi tube or an averaging Pitot tube. Chemicals and pure gases for calibrating analysers can be calculated as part of the operating costs. If spare parts are readily available, maintenance and repair are relatively easy and fast, but if the spare parts have to be manufactured in the repair shop, maintenance costs will rise.

## 12.4 CALCULATION OF THE ECONOMY OF INSTRUMENTATION

Investigation of the economic efficiency of process control is essential for decisions on investing in control systems. General rules and methods will be discussed in the following. A detailed economic study would require too much space, and it should not be forgotten that each national economy has its own special laws, calculation methods, auditing rules and tax system [12.1].

Three levels of economic investigation can be distinguished:

(*a*) comparing individual instruments, controllers and control systems;
(*b*) economy of the application of individual instruments and controllers;
(*c*) economy of the automation of a process unit or chemical plant (including retrofits).

The first group is concerned with instrument selection. The second group requires an evaluation of the application of on-line analysers, manual and automatic measurements, data acquisition and installation of individual controllers or microprocessors. The third group is concerned with the economic evaluation of complex units and plants with different grades of automation. In the design phase, the application of exact cost-benefit evaluation is restricted and the work is done mainly on the basis of experience with earlier plant automation.

### 12.4.1 CALCULATION METHODS

The main benefits of process control should be calculated by investigating the following effects:

— reduction of labour personnel;
— reduction of raw material consumption;
— increasing flexibility of production;
— reduction of waste and off-specification products;
— energy conservation;
— production of higher quality products;
— increasing plant throughput;
— increasing equipment lifetime;
— increasing plant reliability, reducing insurance cost;
— reducing maintenance, increasing time between maintenance rounds;
— reducing capital cost.

The investigation of instrument and control system capital costs includes comparing various systems and determining break-even points. The prices of various systems as functions of variables, complexity or control loops are calculated, and the point where the lines cross shows the point of equal cost, the 'break-even point'. Fig. 12.4 shows diagrams for logic control systems, characteristic for process control systems. Break-even points change with time and the diagrams have to be redrawn frequently. Although the break-even point method seems to be simple and understandable, it is not exact. There are numerous factors which cannot be weighted by cost.

A few examples of the evaluation will reveal its nature. Case studies of economic gain through automation of two parallel operating debutaniser columns were investigated first. The conventional control scheme with temperature controllers had been updated and an additional feed compensation control unit and a load control with heating manipulation installed. Column capacity increased by 22%. The second case was the installation of a gas chromatograph on a depropaniser column. With feed-forward control a 25% increase in production was achieved, with a reduction in the isobutane content of the propane to 4% against the previous 5–6%. Instrumentation costs were returned in both cases within six months. Many similar case histories can be found in journals and manufacturers' literature [12.8].

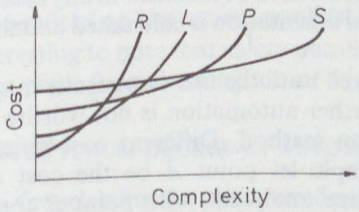


Fig. 12.4 Break-even points of control systems. *R* electro-mechanical relays; *L* hardwired logic; *P* programmable logic controller; *S* microcomputer

### 12.4.2 RETURN TIME CALCULATION

A relatively simple calculation method for evaluating individual instruments, particularly analysers, is the return time (or return investment time RIT) method. Instrument costs are calculated first with the following equation

$$B_1 = K(1+f) + n\,360\,P + n\frac{360}{T}E, \tag{12–1}$$

where $B_1$ — total instrument (analyser) cost for $n$ years;
$K$ — instrument purchase price (\$);
$f$ — installation cost factor;
$P$ — analyser operating cost (daily) (\$/d);
$E$ — maintenance and verification cost of the analyser (per occasion) (\$);
$T$ — time between two consecutive maintenances (days);
$n$ — return time (years);
$L$ — the cost of the same chemical analysis made manually in a laboratory (\$/d).

The analysis cost for $n$ years would be

$$B_2 = n\,360\,L. \tag{12–2}$$

When $B_1$ equals $B_2$ the return time for the instrument can be calculated from the equation

$$n = \frac{K(1+f)}{360\,L - P - \dfrac{E}{T}}. \tag{12–3}$$

Sophisticated dynamic calculation methods have been developed for cost-effectiveness calculations which include time factors [12.4].

### 12.4.3 INCREMENTAL CALCULATION METHOD

The optimum instrumentation of a process plant can be calculated by the incremental difference calculation method. This cost-benefit analysis procedure uses step-by-step determination of costs and the resulting benefits. The cost of the basic instrumentation, which has to be installed in any case, is calculated first. Then the cost of incremental instrumentation is calculated and the slope of the cost-benefit line is determined.

This procedure is followed until the last step results in a slope which is less than the desired minimum. Further automation is not worthwhile. Fig. 12.5 shows an example of this calculation method. Different cost-benefit slopes are shown by dotted lines. In the example let point $A$ be the cost and profit for complex instrumentation with on-line analysers, with point $B$ applying for the same plus automatic data processing. If only the slope of the $O$–$B$ line is considered this instrumentation seems well justified, because its effectiveness exceeds 15%. The

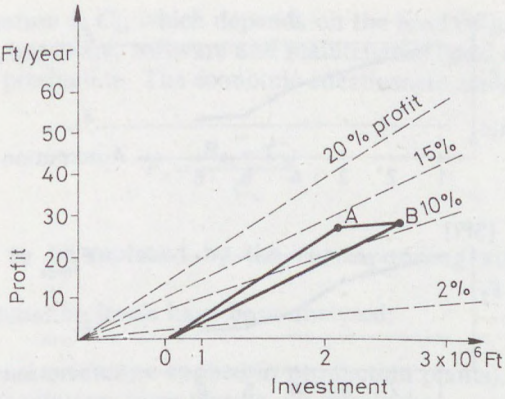


Fig. 12.5 Incremental cost-benefit calculation

Table 12.2. Instrument application analysis

| Objective | Percentage |
|---|---|
| Plant safety instrumentation | 48% |
| Flow and quantity measurement | 15% |
| Quality control instruments | 12% |
| Instruments for better utilisation of plant capacity | 3% |
| Automation for greater efficiency | 10% |
| Automation for saving manpower | 5% |
| Environment and health instrumentation | 2% |
| Controllers for mechanisation of heavy physical work | 3% |
| Other purposes (calibration, etc.) | 2% |

incremental analysis shows that the last step, which is represented by the line *A–B*, has an effectiveness less than 3%. If, at the time, management requires an effectiveness above 10%, this last step should not be installed.

Similar calculations may be used when the number of variables for process optimisation is calculated. The effect of an additional parameter diminishes with an increasing number of parameters considered. The optimal number of parameters can be found with cost-benefit calculations [12.6], [12.10].

Table 12.2 shows the result of an instrument application analysis in a Hungarian chemical plant. It is interesting to note that safety automation represents 48%; this is the value required for point 0 on the diagram of Fig. 12.5.

### 12.4.4 OPTIMUM DEGREE OF AUTOMATION

A calculation method for selecting the optimum degree of automation has been presented by R. Fretz [12.12]. If the product value is *P* and the expenses *E*, there is a theoretical minimum expense to produce product value *P*. Expenses can be

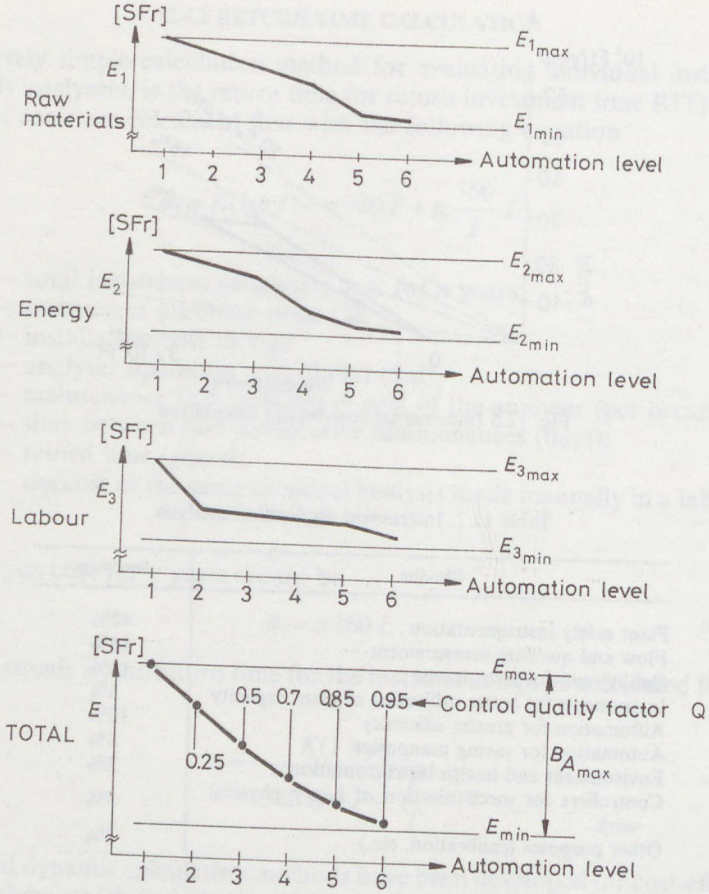


Fig. 12.6 Expenses as a function of automation level

divided into raw materials $E_1$, energy $E_2$, labour $E_3$ and waste $E_4$

$$E = E_1 + E_2 + E_3 + E_4 . \tag{12–4}$$

To evaluate the economic efficiency of automation the maximum expenses $E_{max}$ without automation have to be calculated. The benefit of automation is

$$B_{A\,max} = E_{max} - E_{min} . \tag{12–5}$$

In industrial practice only a part of this theoretical value can be achieved

$$B_A = B_{A\,max} \times Q , \tag{12–6}$$

where $Q$ is a quality factor with values between 0 and 1.

The cost of automation is $C_x$, which depends on the level of automation. This includes engineering, hardware, software and maintenance costs over a period of the first five years of production. The economic effectiveness can be calculated by the equation

$$F_x = \frac{B_{Ax} - C_x}{C_x}, \tag{12–7}$$

where index $x$ has to be replaced by the corresponding automation level number.

The following automation levels have been analysed:

Level 1 None (this level cannot be applied in production plants).
Level 2 Minimum. Regulators, some alarms, no interlocks.
Level 3 Normal. Level 2, plus advanced controllers and interlocks.
Level 4 Improved. Level 3 plus quality measurement and special control systems (e.g. feed-forward, sequence logic for batch).
Level 5 Advanced. Level 4 plus optimum control, multivariable control loops.
Level 6 Advanced plus sequence for automatic startup and shut down.

The expenses change with the level of automation. Fig. 12.6 shows an example of how expenses for raw materials, energy and labour are changing. The last diagram shows the control quality factor. These curves are derived from the difference between idealised production and actual production. During the run of the process plant an ideal production curve can be drawn, which is presented in Fig. 12.7. The real production curves are also shown, with lower production levels. It is assumed that a higher grade of automation will push the production curve up towards the ideal one. Profit has been calculated conservatively. Reduction of steam consumption, for example, as a result of stepping from level 3 to level 4, amounted to 1.85 tonnes/hour. This meant a reduction of energy expenses by $ 200,000 per year. But it was assumed that, given the analysis of the plant — which was required for the preparation of the control strategy of level 4 — a good operator team would have achieved half of the potential reduction of steam consumption. Therefore a saving of only $ 100,000 was taken into account.

For optimum automation, four different automation technologies have been evaluated as follows:

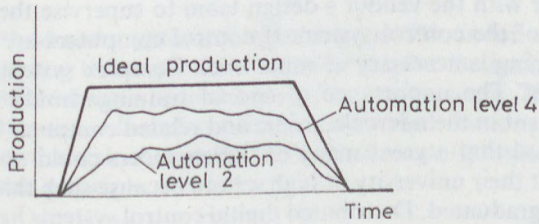


Fig. 12.7 Real production curve compared to ideal production curve

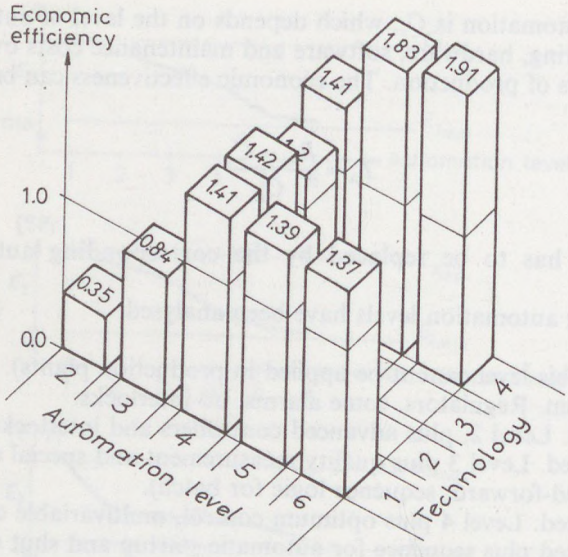


Fig. 12.8 Economic efficiency of automation [12.12]

1. Pneumatic analogue control, hardwired logic;
2. Like No. 1, but programmable logic controller;
3. Distributed digital multiloop controllers and PLC;
4. Digital process control system with CRT display and keyboard for the operator.

Reasonable variations have been calculated and presented in Fig. 12.8, showing the economic efficiency of the various automation levels in relation to the technology selected.

## 12.5 TRAINING

The training of instrument engineers, maintenance personnel and process operators is an essential part of process control system installation. Instrumentation experts have to be trained before installation of the system.

It is recommended that they participate in the design and configuration phase and work together with the vendor's design team to supervise the manufacturing and construction of the control system. If control computers are included in the system, programming is necessary at some level. Complex systems require highly qualified engineers. The importance of special training should be emphasised, because development in the microelectronic and related computer field is very fast. It has to be realised that a great many of the engineers could not have heard of microprocessors at their university or high school because such things were invented only after they graduated. Distributed digital control systems have developed so fast that the professors could hardly follow the situation.

A special type of operator training uses a device called an operator trainer. Teaching process operators on the production plant is neither safe nor cheap. With the aid of process simulation, plant behaviour can be taught on a computer. An appropriate man-machine interface has to be provided, similar to that in the actual plant, and an adequate process model has to be developed. An operator trainer or plant simulator is used for hazardous or very complex plants. It is common practice for nuclear power plants, but it has also its way into the chemical industry. The process operators can learn and practise their job without danger or loss of materials and energy. Dangerous situations and unexpected faults can be simulated and analysed, and the operator can be trained to act quickly and safely [12.5], [12.9].

There are several types of training simulators available. The cheapest types are implemented on PCs. Real operator trainer simulators have the operator station of a well-known and used DCS for the students (trainees) and a standard VDU for the teacher. In very large training centers, where six or twelve students are trained, simultaneously, special systems have been developed. The operator training simulator of the BASF (Germany) training center has $2 \times 6$ student workstations and 2 teacher workstations (type Teleperm M OS 262) connected to the control system's central units (AS 230). The process simulation goes on a VAXCluster of six MicroVAX 2000 and one VAXStation 3200 each.

The applied software is a special version of DIVA developed at the University of Stuttgart (Germany) [12.13].

## 12.6 OPTIMISATION

Economy of plant operation can be described by the objective function, sometimes known as the cost function. When the dependence of the objective function upon the resources can be expressed by a mathematical equation and constraints can be defined, it is possible to search for an optimum by computational procedures [12.11].

Optimisation techniques may have a large impact on plant economy, but not all chemical plants have definite and sharp optimum operating points. Slowly changing environmental effects and flat characteristics are not favourable for optimisation [12.6]. Theoretically two optimisation methods can be applied:

(*i*) stationary process optimisation,
(*ii*) dynamic process optimisation.

The first method seeks optimum operating conditions for a steady state process. Several computing techniques can be used (simplex method, hill climbing search). The second method seeks optimisation of a transient state. The transition from one steady state to a second can be optimally controlled. Various methods can be used, such as variational calculus, Bellmann's dynamic programming method, Pontryagin's maximum principle, etc. [12.10].

## REFERENCES


[12.1] Bertsch, L. and co-workers: *Automatisierungstechn. Prax.* 31 (1), (1989) 5.
[12.2] *Costimator. Proc. Eng.* 69 (106), (1988) 16.
[12.3] Gunklev, A. A.: *Chem. Eng.* 92 (1985) 177.
[12.4] Itskovits, E. L., V. N. Livshits: *IFAC 7th World Congr. Helsinki 1978.* Pergamon Press, New York, Vol. 3. p. 1635.
[12.5] Leins, R. and co-workers: *Automatisierungstech. Prax.* 31 (6), (1989) 259.
[12.6] Lipták, B. G.: *Optimization of Unit Operations.* Chilton Book Co., Radnor 1987.
[12.7] *Modern Cost Engineering Vols I, II. Chemical Eng.* McGraw-Hill, New York 1979, 1984.
[12.8] Nisenfeld, A. E.: *Regelungstech. Prax.* 17 (1975) 273.
[12.9] Pathe, D. C.: *Oil and Gas J.* 83 (6), (1985) 74.
[12.10] Reklaitis, G. V., A. Ravisdraer, K. M. Rapdell: *Engineering Optimisation.* Wiley-Interscience, New York 1983.
[12.11] Rogers, J. A.: *Chem. Eng.* 92 (25), (1985) 95.
[12.12] Fretz, R.: An investigation on the economic efficiency of different automation levels. *EEC Seminar on Process Automation in the Chemical Ind. Noordwijkerhout,* 1981.
[12.13] Gilles, D. et al.: *Automatisierungstech. Prax.* 32 (7), (1990) 343.

# APPENDIX

## LETTER CODE FOR IDENTIFICATION OF INSTRUMENT FUNCTIONS

According to international standards (ISO 3511) and many national standards, the function of an instrument shall be defined by a letter code. This letter code has to be used with graphical symbols, and it has to be included within the instrument symbol circle (see Fig. A–1).

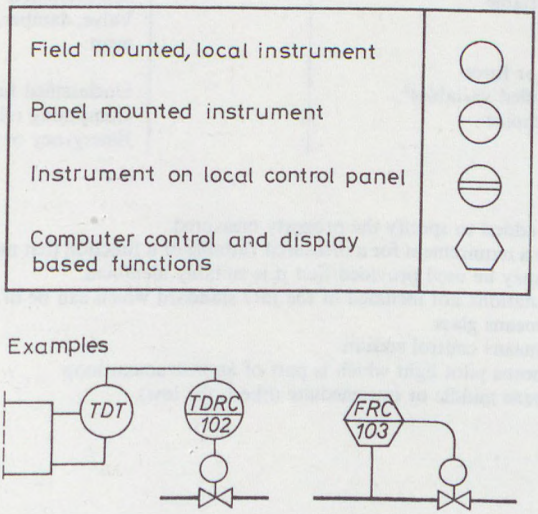


Fig. A-1 Graphical symbols

| Letter | First letter | | Succeeding letter |
|---|---|---|---|
| | Measured variable | Modifier | Display or output function |
| A | | | Alarm |
| B | | | Display of state |
| C | | | Controlling |
| D | Density | Difference | |
| E | Electrical variables | | Sensing element |
| F | Flow rate | Ratio | |
| G | Gauging, position, length | | |

| Letter | First letter | | Succeeding letter |
|---|---|---|---|
| | Measured variable | Modifier | Display or output function |
| H | Hand (manually) operated | | High |
| I | | | Indicating |
| J | | Scan | |
| K | Time or time program | | |
| L | Level | | Low |
| M | Moisture or humidity | | |
| N | User's choice | | User's choice |
| O | User's choice | | |
| P | Pressure | | Test point |
| Q | Quality[1] (e.g. analysis)[1] | Integrate total | Intergrating summing |
| R | Nuclear radiation | | Recording (or print) |
| S | Speed or frequency | | Switching |
| T | Temperature | | Transmitting |
| U | Multivariable | | Multifunction unit |
| V | Viscosity | | Valve, damper, louvre, actuating element |
| W | Weight or force | | |
| X | Unclassified variables[2] | | Unclassified functions[2] |
| Y | User's choice | | Computing relay |
| Z | | | Emergency or safety acting |

*Remarks:*

[1] A note shall be added to specify the property measured.

[2] When a user has a requirement for a measured variable or a function that may be used to a limited extent, the letter *X* may be used provided that it is suitably identified.

There are several notations not included in the ISO standard which can be of help. Some examples:

G as second letter means glass

K as second letter means control station

L as second letter means pilot light which is part of an instrument loop

M as third letter means middle or intermediate (like L for low).

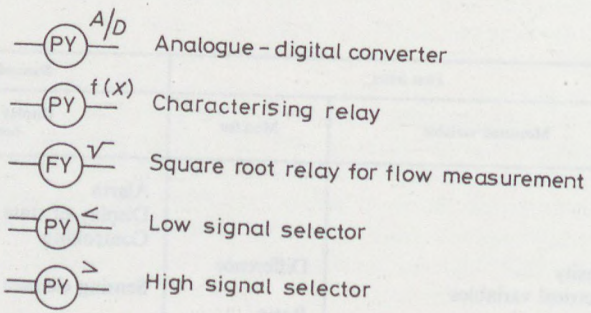


Fig. A-2 Symbols for instrument interconnection diagrams

Application example: TDRC-102 denotes a temperature difference recording controller with tag No. 102,
where *T* is the measured variable,
*D* is the modifier,
*R* & *C* are functions,
102 is an identifying tag number.

The standard is extended to cover detailed symbols for instrument interconnection diagram (see Fig. A-2) and basic symbols for process computer, interface, and shared display (control functions). The extension includes additional symbols and is intended for the communication of measurement and control functions among instrument specialists and other engineers involved with vessels, piping, layout design and operation. The symbols are used on piping and instrumentation diagrams (P & ID), engineering line diagrams and instrumentation diagrams.

# SUBJECT INDEX


A

abbreviations XV
absolute error 18
absolute pressure control 181
absorber control 214
absorption type radioactive thickness measurement 149
absorption type refrigerator control 176
acceptance tests 6
accuracy 13, 304
actuators 315, 327
adaptive control 62
adsorber control 209, 395
advanced control 64
air bleeding vacuum control 180, 189
air conditioning 397
air cooler control systems 166
air dryers 212, 395
alarm
  display 16, 383
  sequence 309
  signal 376
  sound 378
  system 16
ambient effects 14
analogue digital converter (ADC) 14, 354
analogue signals 9
analysers 265, 296, 385, 405
analyser room 385
analytical instrument development 300
Annubar flow sensor 294
annunciator systems 16, 309
anti surge control of compressors 123
antivalence control 16
anti windup 252
archiving 11, 372
artificial intelligence (AI) 64, 93
audible alarm 378
auditing 408
automated
  batch crystalliser 190
  centrifuge operation 143
  chemical analyser 300
  filter press 141
  mixing 134
  spray dryer 208
automatic restarting 340
automatic start up 143
automatic technological process control systems (ASU TP) 68
automation
  degree 67
  level 413
  phases 67
auxiliary
  input variable 52
  manipulated variable 53
average
  density 189
  tank cross section 106
  tank temperature 106
averaging level control 101

B

back scattering radioactive thickness measurement 149
balance equations 35, 42, 248
ball mill control 145
batch
  adsorbers 210
  distillation 237
  dryer 204
  fermentation 276
  filtering 141
  ion exchangers 210
  reactor 249, 252
  weighing 135
batch automation systems guidelines 255
batch controllers 252
batch process control 251
bath tub curve 24
Baumann butterfly valve contour 326
benefits of computer control 267
benefits of process control 409
biocatalyst 301
biosensors 301
biotechnological process control 270
bleed air control method 180
blending control 133, 136

blowdown control 108, 309
blower control 122
boiling point elevation measurement 181
boilup control 227
branch highway 360
break even point 409
break front panel 374
Bristol's array 49
bubbling density measurement 139
buffer solution 282
bulk solids level measurement 110
bus systems 360
bus transactions 360
butterfly valves 325
bypass control 117, 164
bypass line 27, 299, 391, 394

C

cabinets 374
cables 392
calculated quantities in fermentation 275
calendering process control 149
CAMAC system 360
Camflex valve 316, 325
capacity control of
  centrifugal pumps 117
  fans and blowers 122
  positive displacement pumps 119
  reciprocating compressors 126
  turbocompressors 122
capital expenditure 400
carbon dioxide evolution rate (CER) 275
cascade control 55
cascade ratio control 56
catalogues of control schemes, models 83
cathode ray tube (CRT), see VDU 358
cause and effect analysis 7, 49
centrifuge instrumentation 142
characteristics of the controlled process 338
choked flow 319
classification of gases and ignition temperatures 387
classification of hazardous areas 387
clearance pocket control 126
coal gasification process control 277
Co-Audinator computer program 5
combustion control 168
common mode noise 15
communication
  hierarchy 362
  protocol 363
  systems 360
comparison principles 23
compensation principle 23
compressor refrigeration system control 175
compressor surge control 123
computer aided control system design (CACSD) 88
computer aided design (CAD) 87
computer aided design of instrumentation 91
computer aided software engineering (CASE) 369
computer application in the chemical industries 334
computer control of
  acetylene hydrogenation 266
  batch processes 255
  dryer 207
  fermentors 275
computer control software 364, 368
computer control systems
  centralised 340
  distributed 342
  hierarchical 343
computer integrated manufacturing (CIM) 371
computer numerical control (CNC) 155, 338, 346
concurrent evaporator plant control 185
condenser flooding control 225
confidence level 20
conservation principle 36
contact drying model 197
continuous blending 136
continuous stirred tank reactor (CSTR) 249
control
  algorithms 365
  consoles and desks 376
  objectives 34
  panels 374
  programs 368
  rooms 379
control system
  design strategy 80
  evaluation 409
  problem solving methods 78
control valves 313, see also valves
controllers 306
conveyor belt scale 18, 128
Coriolis force mass flow meter 112
correlation type flowmeter 116
Cor-Vol tank farm monitoring system 106
cost accounting factors 5
cost analysis for batch distillation 239
cost benefit calculation methods 400, 408
cost breakdown 405
cost of alterations 403
countercurrent rotary drum dryer control 205
criteria of control 6
cross connection control of an evaporator 184
cross coupled reboiler control 224
crude oil distillation column control 236
crusher protection control 144

crystalliser
cooling 192
evaporating 189
CSMA/CD system 364
cumulative weighing 135

D

data acquisition 5, 335, 347, 354
data communication systems 359
data communication topology 359
data processing 12, 73
data processing flowchart symbols 73
data recording speeds 12
data reduction 372
data terminal equipment 359
dead time 39
decay ratio 48
decision support 67
degree of automation 67, 407, 411
degree of freedom 41, 179, 222
density
measurement 139
ratio compensation 186
derivative on measure 252
description of chemical systems 35
design methods 66
design rules for
control room data 378
gas analyser rooms 287
gasholder inlet line 109
impulse piping 389
metering pump installation 120
selecting manipulated variables 7
sensor and valve installation 393
desuperheater mixing valve 161
dew point measurement 196
dew point specification for instrument air 395
diagnosis 6
digital analogue converter (DAC) 355
digital controllers 306, 348
digital data transfer 360
direct acting controllers 307
direct digital control (DDC) 335
direct heat transfer 160, 245
direct measurements in a fermentor 272
direct measuring principle 23
displacement level transmitter dynamics 98
distillation column
boilup 227
bottoms composition 231
distillate composition 230
liquid level 85, 224
material balance 233
pressure 224
reflux 227
temperature difference 232
vapour flow 226
distributed control systems (DCS) 342
disturbance 6, 39, 51, 69
diverters 130
Dorr type classifier instrumentation 140
downstream processing 270
Dowtherm, Diphyl 174
dryer control schemes for
contact 197
conveyor belt 209
drum 198
fluid bed 206
freeze 201
rotary drum 205
spray 207
tray 204
vacuum tray 200
dynamic error 20
dynamic process optimisation 415

E

E curves 242
early warning system 6, 18
economic efficiency 408, 414
economy 31
electric cable heater 391
electrical conductivity measurement 191, 194, 214, 216
electrical heating control 173
electrical noise sources 15, 392
electrical schematics 76
electrode
cleaning 282
distance 261
installation 282
pressure difference control 273
electrolysis instrumentation 260
electromagnetic interference (EMI) 14, 392
emergency shutdown system (ESD) 340
enclosures 29, 385
end point control 56
engineer's console 377
enthalpy-concentration diagram 202
environment 28
environmental laws 6, 169, 407
enzymes 301
EPOS design system 91
equipment design 85
ergonomic design of control room equipment 377
error
distribution 20, 26
parasitic 19
random 19
systematic 19

estimation of
parameter 40
structure 40
evaporating cooler control 175
evaporator control 177
evaporator
composition measurement 181
level measurement 179
pressure measurement and control 180
EXACT self tuning system 64
excess air for combustion 168
explosion hasard 385
explosion proof enclosures 388
extractor control 257
extremity control 60, 146
extruder control 151

F

failure classes 18
failure rate 24
fall out curve 24
fault tolerance 28, 340
fault tree 81
feasibility study 68
fed-batch process 272
feedback control 51
feed and load control of evaporator 186
feed enthalpy manipulation 233
feed flow control 101
feed-forward column control 234
feed-forward control of
air conditioning 398
heat exchanger 52
feed tank instrumentation 104
feeders 129, 134
fermentation control 271
fermentation
characteristic curve 276
optimisation 275
fermentation, calculated quantities in 275
field
instrumentation 385
mounting, installation 402
multiplexer 385
field-bus 364
fill in the blanks method 84, 93
filling station control 136
filtering control objectives 141
final control elements 7, 313
firmware 93
flight material control 135
flooded heat exchanger control 165, 225, 227
flow
meter selection chart 114
metering 112
ratio control 54, 134
regulator 308
flow-difference control 121
flowsheet 71
flue gas analysis 168
fluidised bed dryer control 204
flying master principle 360
foam sensor 274
formaldehyde process control scheme 264
freeze dryer control 200
frequency of
carrier band 364
data processing 12
information gathering 10, 372
measured process 13
sampling 13
functions of the hierarchy levels 372
fundamental equations 34
fundamentals of control theory 45
fundamentals of process monitoring 3

G

gain scheduling 63
gas analyser room (GAR) 386
gas discharge type indicator 305
gas sampling system 298, 390
gasholder instrumentation 108
gateway 373
Gibbs phase rule 44
glass electrodes 281
good manufacturing practice (GMP) 11, 277, 407
granulator control 148
graphic panel 375
graphical documentation 71
graphical symbols of instruments 417

H

hair hygrometer 195
Hampsonmeter type level measurement 107
hasard analysis methods (HAZAN, HAZOP) 81
hasardous areas 28, 387
heat exchangers 158
heat of reaction 248
heat transfer
coefficient 162
equation 169
materials 174
heatless dryer 213, 395
heatup 251
hierarchical control system 343, 346
hierarchy levels of control 372
high pressure difference 265
high pressure protecting tube 259

high temperature heating 173
highway addressable remote transducer (HART) protocol 303
hoppers on load cells 111
hot point of a reactor 258
human engineering 50, 379
human machine interface, see man machine interface (MMI)
humidity 195
hybrid recorder 305
hydraulic systems 313
hydrocyclone control 139
hydrogenation instrumentation 265
hydrostatic tank gauge (HTG) 104

I

identification 40
ignition temperatures 387
impulse generator 132
impulse lines 390
incremental instrumentation cost 410
INDEXi data bank 92, 401
indicating instruments 304
indication of hasardous conditions 4
induction heating 173
inert gas 143, 225
inferential control 40
information
  flow diagram 72
  gathering 7
  management 371
  storage 372
infrared radiation 14, 194
injection moulding control 153
in-line blending systems 133
input output models 39
installation cost
installation rules for
  metering pumps 120
  pd flowmeter 394
  temperature sensors 158, 230
instrument
  air 212, 394
  connections 86
  evaluation 31
  price information 401
  repair shop 384, 404
  symbols 419
instrument application analysis 411
instrument loop diagram 75
instrument panel board layout 382
instrumentation cost 406
integral of absolute error (IAE) 47
integral of time multiplied absolute error (ITAE) 47
integrated sensor 302
intelligent
  actuator 328
  sensor, transducer 302
interaction analysis 50, 184, 203, 207, 224
interaction of construction and control 86
internal reflux control system 229
interrupt 367
intrinsically safe systems 388
inventory control 104, 244
inverse response 52, 231
ion concentration measurement 280
ion exchanger 210
ionselective electrodes 188
ISO OSI layer architecture 363

J

junction box 37, 385

K

Kálmán theory of controllability 46
Kilroy failure 82
kneader control 147

L

ladder diagram 76, 312
leakage detection 107
letter code 417
level control 85, 98, 224
level controller
  dynamics 98
  self acting 307
level measurement of bulk solids 10, 109
level measurement of liquids 98
limit control algorithm 17
liquid density meters 296
liquid storage 103
load beam application 111
load cell application 107, 109, 111
load control of batch distillation 237
local area network (LAN) 341, 346, 363
logic diagrams 74
logic control systems
  hardwired 310
  pneumatic 313
  programmable (PLC) 311
loop display 377
loss-in-weight feeder 134

## M


maintenance 27, 408
man machine interface (MMI) 357, 374, 377
man process interface 392, see also MMI
management information system (MIS) 392
manufacturing automation protocol (MAP) 363
marshalling racks 380
master controller 55, 268
master-slave concept 360
material balance
  control 185, 233, 244
  equation 35, 42
  measurement data 5
material streams measurement 112
mathematical model
  input output 398
  levels 38
  purposes 37
maximum peak height (MPH) 102
maximum rate of change in outflow (MRCO) 102
mean down time (MDT) 25
mean time between failures (MTBF) 25
mean time to repair (MTTR) 25
measurement
  error 18
  of cost accounting factors 5
  process 8
  range selection 26
measuring principles 23
mechanical separation control 139
metering pumps 119
microclimate 28
microcomputer 350, 352
microprocessor 348
microprocessor software development system (MSDS) 369
MIDTEMP sensor 106
minicomputer 350
mixing plant automation 137, 147
model building 41
model identification adaptive systems (MIAS) 63
model predictive control 61
model reference adaptive systems (MRAS) 63
modem 359
moisture 194
mosaic panel 376
moulding process control 155, 346
multicomponent distillation control 235
multifunction controller 343
multihole Pitot tube 295
multiloop digital controller 349
multiplexer 353, 355
multiproduct plants 256
multivariable process input–output model 40


## N


NADH measurement 274
NAMUR guidelines 255
natural gas compressor control 125
near infrared reflection (NIR) analyser 300
NEMA specification for enclosures 29
Nernst equation 280
neutralisation process control 280
noise level of control valves 324
noise sources 8, 15, 392
non-condensables 225
non-invasive sensors 116, 295
nonlinear „N" controller 103
normal mode noise 15
null trend instruments 30


## O


objective function 34
objectives of reactor control 243
observability 45
observer (state observer) 61
off line analysis 297
off line computer control 335
oil burner control 170
oil free compressors 395
on line analysers 296
on line computer control 336
open system interconnection (OSI) 362
operating system 366
operation management centre (OMC) 384
operator console 376, 383, see also process operator console
operator station (OS) enhanced (EOS) 344
operator trainer 415
optical cable 295, 393
optical isolation 353
optimalisation 415
optimum control
  of absorption process 216
  of fermentation process 276
  operation of batch distillation 240
order estimation 40
original equipment manufacturer (OEM) 402
override 18
overshoot protection 251
oxidation reduction potential 273, 281, see also redox
oxygen content in flue gas 168
oxygen uptake rate (OUR) in fermentation 275

P

panel board layout 382
pattern recognition 62, 64
peak follower 288
Peltier element cooler 298
periods or phases of drying 197
personal computer (PC) 312, 358
pH control loop characteristics 284
pH isotherm lines 282
pH measurement 280
phase rule 44
phases of instrumentation 67
pipe still control scheme 171
pipe wall temperature measurement 172
piping and instrumentation diagram (P&ID) 72, 80, 419
piping design and instrumentation 87
plant layout and instrumentation 384
pneumatic control schemes 77
pneumatic logic control systems 313
pneumatic valve actuator 315, 328
polymerisation control 268
positive displacement (pd) meters 113
post mortem registration 12
power failure 28
pre-investment study 69
predictive control 61
pressure control 108
pressure drop across control valve 320
pressure recovery factor 319
pressure regulator 308
price information 401
probability 20, 24
process analytical chemistry 296
process control
  bus 364
  language 367
process interfaces 353, 355
process management system (PMS) 373
process operator console (POC)-station, desk 342, 376, 383
profitability 5
programmable logic controller (PLC) 311
project data base 88
project documents 68, 70
proportioning pump, see metering pump
protecting box 385
protecting principles 388
protection tree 81
protocols 362
prover loop 116
pump delivery control schemes 118
purge 180, 390

Q

Q-ball valve 325
quality assurance (QA) 5
quality criteria 47
quality of control 46
quantity calculation system 106

R

radio wave telecommunication 392
radioactive thickness measurement 149
railway tank waggon filling 136
ranking (rangeing) racks 382, see also marshalling
rat holing in silos 130
ratio control 53
reaction rate 247
reactor control
  objectives 243
  rules 243
reactor feed control 243
reactor temperature control 244
recorders 305
recording speeds 12
recuperator control 167
reduction–oxidation (redox) potential 281, 288
reference electrode 282
reflexion type thickness measurement 149
reflux ratio control for batch distillation 238
refrigeration control systems 174
relative disturbance Gain (RDG) 50
relative dynamic array (RDA) 50
relative error 18
relative gain array (RGA) 48, 80
relative humidity 397
reliability 23
reset windup 251
residence time 242
resistance thermometer (RTD) 294
respiratory quotient (RQ) 275
restarting 340
return investment time (RIT) 410
robot application 155
roller surface temperature measurement 149
rotameter 87, 113
rotating vane control valve 325
rubber curing 269
runaway of reactor 252, 267

S

safe ratio control system 169
safe start up 57

safety
barrier 382
codes 5
relief valve 309
requirements 28, 340
screen (Davy) 390
systems 16
sample and hold multiplexing 355
sample conditioning 298
sampling
frequency 13
system 298
time 13
time lag 298
scanning speed 13
sedimentation process instrumentation 139
selection of
control valve 322
controlled variable 6
flowmeters 113
measured variable 4
measuring range 26
selective control 56
self tuning controller 64, 349
semigraphic panel 375
sensor 294
sensor location error 157
separating devices for sensors 296
sequencing control 60, 253
sequential function chart (SFC) 84
setpoint control (SPC) 51, 335
side mounted electrode 274
sigmoid curve (S curve) 249
signal
classes 9
selector 56
silencer 324
simulation 38
simulator 415
smart
field communicator 302
transmitter 302
software
failure 25
reliability 26
software implemented fault tolerance (SIFT) 340
solids level detection 10, 109
solids sampling device 300
specification of
control valves 323
enclosures 29
instruments 23, 26
speed difference control 132
split range control 58
spray dryer control 206
standard analogue signals 304
standard deviation 19
state chart 84
state observer 61
state space equation 36
statistical process control (SPC) 64
steam
desuperheater valve 161
superheater control 160
tracing 391
storage of
free flowing bulk solids 109
gas 107
liquids 103
parcels, packed goods 110
straightening vane 392
structogram 73
structure of the book 3
supervision of technology 4
supervisory control and data acquisition (SCADA) 8, 335, 347
supervisory digital control (SDC) 335
surface heat exchangers 162
surge line of compressors 123

T

tank farm instrumentation 103
tank vehicle filling station 136
tank weight measurement 107
technical project documentation 70
teething troubles 24
temperature
compensation 282
effect 14
measurement error 21
sensor location 157
tender 70
thermocouple extension wires 392
thermocouples 294
thickness measurement 149
three component control 53, 279
three port valves 326
throttling flow control 117
throttling primary devices 294
time constants of temperature sensors 159
time response 47, 158
timing diagram 85
token passing 364
topology of data communication 359
total state presentation 31
training simulator 415
transducer 303
trend control 59
trend recorder 372
TRITEMP sensor 106
true mass flow meter 112, 116
TTL systems 270

turbocompressor control 122
turbidity measurement 139, 141, 274
two stage pH control systems 285
two stage refrigerator control 175
tyre vulcaniser control 270

U

UNIDO 69
unified control scheme catalogues 83
uninterrupted electric power source (UPS) 396
unit control schemes 51
unit operations control 95
upstream processing 270
URS control system 307
useful life period 24

V

vacuum pump control 181
validation 32, 40
valve
actuator 327
characteristics 316, 320
flow coefficient 315
positioner 323, 331
sizing equations 317
sizing nomograph 322
working range 317
valve specification data sheet 323
vapour load control 226
variable area flowmeter 87, 113, 402
variable speed drive 118, 331
verification 86
viscosity control 171
viscosity correction diagram 318
visual display unit (VDU) 357, 376

W

wall penetration methods 380
warehouse automation 110
warehouse servicing machine 111
warm water mixer 43
warning systems 16
water softener control 213
wear out period 24
web speed control 130
web velocity meter 132
weighing methods 135
weight measurement principles 23
weighted blocks per second (WBPS) 339
wise transmitter, see smart transmitter 302
workstations 358
Wobbe index measurement 170

Y

yield–pH relationship in fermentation 271

Bibliotheca Academiae Scientiarum Hungaricae
MAGYAR TUDOMÁNYOS AKADÉMIA KÖNYVTÁRA

The book tries to bridge the problems faced by chemical engineers and control engineers. The development of an instrumentation and control system for a chemical process requires teamwork which is helped by a common language and basic knowledge presented in the book.

All aspects of control and the most recent advances in the field have been treated and the best control systems of a wide variety of unit operations and unit processes have been highlighted with numerous illustrations. A brief overview of the fundamentals of informatics, metrology, control theory and control system design has also been provided.

A survey of the available instruments and the special problems of control systems in the chemical process industry is given without the need for higher mathematics and in a style which makes the book readily comprehensible for practising engineers.

68374

Iván Nagy

# Introduction to Chemical Process Instrumentation




170889